M0091175-10 (en-us)
March 2023

Operation and Maintenance Manual

D3-Series Compact Track Loaders (CTL), Multi-Terrain Loaders (MTL), and Skid Steer Loaders (SSL)

EP3 1-UP (246D3)	ZB2 1-UP (262D3)	HSX 1-UP (242D3)	KE9 1-UP (239D3)
EP7 1-UP (279D3)	TP4 1-UP (262D3)	T8A 1-UP (242D3)	ME6 1-UP (242D3)
EP8 1-UP (262D3)	MXJ 1-UP (262D3)	R2L 1-UP (242D3)	T7Z 1-UP (242D3)
EP9 1-UP (289D3)	TP6 1-UP (262D3)	T8T 1-UP (242D3)	PF6 1-UP (246D3)
AN9 1-UP (299D3XE)	BT2 1-UP (262D3)	NXL 1-UP (242D3)	T9X 1-UP (246D3)
BX9 1-UP (299D3XE)	TP7 1-UP (262D3)	T8W 1-UP (242D3)	R9E 1-UP (249D3)
CY9 1-UP (299D3)	KC6 1-UP (246D3)	KXL 1-UP (236D3)	S7E 1-UP (257D3)
DY9 1-UP (299D3)	T9Z 1-UP (246D3)	AZ6 1-UP (236D3)	TE9 1-UP (259D3)
GJ2 1-UP (272D3XE)	AH6 1-UP (246D3)	F9C 1-UP (236D3)	W6E 1-UP (262D3)
TY4 1-UP (272D3XE)	TC7 1-UP (246D3)	P9C 1-UP (249D3)	TP3 1-UP (262D3)
HX2 1-UP (272D3)	GM6 1-UP (246D3)	HC9 1-UP (239D3)	Z9E 1-UP (279D3)
TP9 1-UP (272D3)	TM7 1-UP (246D3)	HRS 1-UP (232D3)	LB3 1-UP (299D3XE)
JX9 1-UP (289D3)	CW9 1-UP (259D3)	PWN 1-UP (232D3)	XES 1-UP (299D3XE)
KX9 1-UP (289D3)	MC9 1-UP (259D3)	DX8 1-UP (226D3)	EK5 1-UP (226D3)
LA9 1-UP (289D3)	TLS 1-UP (259D3)	BT9 1-UP (289D3)	GJ5 1-UP (232D3)
RB9 1-UP (279D3)	KEZ 1-UP (257D3)	D5R 1-UP (226D3)	K5S 1-UP (239D3)
SZ9 1-UP (279D3)	FMA 1-UP (257D3)	D5Z 1-UP (232D3)	RWK 1-UP (239D3)
TB9 1-UP (279D3)	LM7 1-UP (257D3)	GK6 1-UP (236D3)	WS5 1-UP (249D3)

Language: Original Instructions

WKD 1-UP (249D3)
L32 1-UP (272D3)
TY3 1-UP (272D3)
S1L 1-UP (272D3XE)
TY6 1-UP (272D3XE)
B62 1-UP (299D3XE)
P3R 1-UP (299D3)
GX9 1-UP (299D3XE)
JX3 1-UP (299D3)
R23 1-UP (299D3XE)
S38 1-UP (299D3XE)

Important Safety Information

Most accidents that involve product operation, maintenance and repair are caused by failure to observe basic safety rules or precautions. An accident can often be avoided by recognizing potentially hazardous situations before an accident occurs. A person must be alert to potential hazards, including human factors that can affect safety. This person should also have the necessary training, skills and tools to perform these functions properly.

Improper operation, lubrication, maintenance or repair of this product can be dangerous and could result in injury or death.

Do not operate or perform any lubrication, maintenance or repair on this product, until you verify that you are authorized to perform this work, and have read and understood the operation, lubrication, maintenance and repair information.

Safety precautions and warnings are provided in this manual and on the product. If these hazard warnings are not heeded, bodily injury or death could occur to you or to other persons.

The hazards are identified by the “Safety Alert Symbol” and followed by a “Signal Word” such as “DANGER”, “WARNING” or “CAUTION”. The Safety Alert “WARNING” label is shown below.

⚠ WARNING

The meaning of this safety alert symbol is as follows:

Attention! Become Alert! Your Safety is Involved.

The message that appears under the warning explains the hazard and can be either written or pictorially presented.

A non-exhaustive list of operations that may cause product damage are identified by “NOTICE” labels on the product and in this publication.

Caterpillar cannot anticipate every possible circumstance that might involve a potential hazard. The warnings in this publication and on the product are, therefore, not all inclusive. You must not use this product in any manner different from that considered by this manual without first satisfying yourself that you have considered all safety rules and precautions applicable to the operation of the product in the location of use, including site-specific rules and precautions applicable to the worksite. If a tool, procedure, work method or operating technique that is not specifically recommended by Caterpillar is used, you must satisfy yourself that it is safe for you and for others. You should also ensure that you are authorized to perform this work, and that the product will not be damaged or become unsafe by the operation, lubrication, maintenance or repair procedures that you intend to use.

The information, specifications, and illustrations in this publication are on the basis of information that was available at the time that the publication was written. The specifications, torques, pressures, measurements, adjustments, illustrations, and other items can change at any time. These changes can affect the service that is given to the product. Obtain the complete and most current information before you start any job. Cat dealers have the most current information available.

NOTICE

When replacement parts are required for this product Caterpillar recommends using original Caterpillar® replacement parts.

Other parts may not meet certain original equipment specifications.

When replacement parts are installed, the machine owner/user should ensure that the machine remains in compliance with all applicable requirements.

In the United States, the maintenance, replacement, or repair of the emission control devices and systems may be performed by any repair establishment or individual of the owner's choosing.

Table of Contents

Index Section

Foreword

California Proposition 65 Warning

Diesel engine exhaust and some of its constituents are known to the State of California to cause cancer, birth defects, and other reproductive harm.

WARNING – This product can expose you to chemicals including ethylene glycol, which is known to the State of California to cause birth defects or other reproductive harm. For more information go to:

www.P65Warnings.ca.gov

Do not ingest this chemical. Wash hands after handling to avoid incidental ingestion.

WARNING – This product can expose you to chemicals including lead and lead compounds, which are known to the State of California to cause cancer, birth defects, or other reproductive harm. For more information go to:

www.P65Warnings.ca.gov

Wash hands after handling components that may contain lead.

Literature Information

This manual should be stored in the operator's compartment in the literature holder or seat back literature storage area.

This manual contains safety information, operation instructions, transportation information, lubrication information, and maintenance information.

Some photographs or illustrations in this publication show details or attachments that can be different from your machine. Guards and covers might have been removed for illustrative purposes.

Continuing improvement and advancement of product design might have caused changes to your machine which are not included in this publication. Read, study, and keep this manual with the machine.

Whenever a question arises regarding your machine, or this publication, please consult your Cat dealer for the latest available information.

Safety

The safety section lists basic safety precautions. In addition, this section identifies the text and locations of warning signs and labels used on the machine.

Read and understand the basic precautions listed in the safety section before operating or performing lubrication, maintenance, and repair on this machine.

Operation

The operation section is a reference for the new operator and a refresher for the experienced operator. This section includes a discussion of gauges, switches, machine controls, attachment controls, transportation, and towing information.

Photographs and illustrations guide the operator through correct procedures of checking, starting, operating, and stopping the machine.

Operating techniques outlined in this publication are basic. Skill and techniques develop as the operator gains knowledge of the machine and its capabilities.

Maintenance

The maintenance section is a guide to equipment care. The Maintenance Interval Schedule (MIS) lists the items to be maintained at a specific service interval. Items without specific intervals are listed under the "When Required" service interval. The Maintenance Interval Schedule lists the page number for the step-by-step instructions required to accomplish the scheduled maintenance. Use the Maintenance Interval Schedule as an index or "one safe source" for all maintenance procedures.

Maintenance Intervals

Use the service hour meter to determine servicing intervals. Calendar intervals shown (daily, weekly, monthly, etc.) can be used instead of service hour meter intervals if the calendar intervals provide more convenient servicing schedules and approximate the indicated service hour meter reading. Perform the recommended service at the interval that occurs first.

Under severe, dusty, or wet operating conditions, more frequent lubrication than is specified in the maintenance intervals chart might be necessary.

Perform service on items at multiples of the original requirement. For example, at every 500 service hours or 3 months, also service those items listed under every 250 service hours or monthly and every 10 service hours or daily.

Certified Engine Maintenance

Proper maintenance and repair are essential to keep the engine and machine systems operating correctly. As the heavy-duty off-road diesel engine owner, you are responsible for the performance of the required maintenance listed in the Owner Manual, Operation and Maintenance Manual, and Service Manual.

It is prohibited for any person engaged in the business of repairing, servicing, selling, leasing, or trading engines or machines to remove, alter, or to render inoperative, any emission-related device or element of design installed on or in an engine or machine that is in compliance with all applicable regulations of the intended country to which it has been shipped. Certain elements of the machine and engine such as the exhaust system, fuel system, electrical system, intake air system, and cooling system may be emission-related and should not be altered unless approved by Caterpillar.

Machine Capacity

Additional attachments or modifications may exceed machine design capacity which can adversely affect performance characteristics. Included would be stability and system certifications such as brakes, steering, and rollover protective structures (ROPS). Contact your Cat dealer for further information.

Product Identification Number

Effective First Quarter 2001 the Product Identification Number (PIN) has changed from 8 to 17 characters. To provide uniform equipment identification, construction equipment manufacturers are moving to comply with the latest version of the product identification numbering standard. Non-road machine PINs are defined by ISO 10261. The new PIN format will apply to all machines and generator sets. The PIN plates and frame marking will display the 17 character PIN. The new format will look like the following:

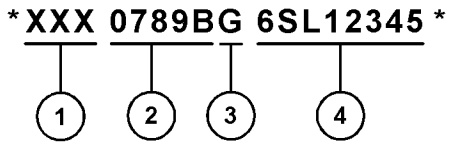

Illustration 1 g03891925

Where:

1. World Manufacturing Code (characters 1-3)

2. Machine Descriptor (characters 4-8)

3. Check Character (character 9)

4. Machine Indicator Section (MIS) or Product Sequence Number (characters 10-17). These were previously referred to as the Serial Number.

Machines and generator sets produced before First Quarter 2001 will maintain their 8 character PIN format.

Components such as engines, transmissions, axles, and work tools will continue to use an 8 character Serial Number (S/N).

Safety Section

i07433321

Safety Messages
(Only Japanese market)

SMCS Code: 7000; 7405

There are several specific safety messages on this machine. The exact location of the hazards and the description of the hazards are reviewed in this section. Be familiar with all safety messages.

Make sure that all the safety messages are legible. Clean the safety messages or replace the safety messages if you cannot read the words. Replace the illustrations if the illustrations are not legible. When you clean the safety messages, use a cloth, water, and soap. Do not use solvent, gasoline, or other harsh chemicals to clean the safety messages. Solvents, gasoline, or harsh chemicals could loosen the adhesive that secures the safety message. Loose adhesive will allow the safety message to fall.

Replace any safety message that is damaged, or missing. If a safety message is attached to a part that is replaced, install a safety message on the replacement part. Any Cat dealer can provide new safety messages.

Illustration 2 g06322672

Crushing Hazard (1)

This safety message is on both sides of the lift arm.

Illustration 3 g03094656

WARNING

Stay clear of the work tool during operation. Entanglement could result in personal injury or death.

Explosion Hazard (2)

This safety message is at rear of the machine.

Illustration 4 g03229317

WARNING

Personal injury can result from improper troubleshooting and repair procedures.

The following troubleshooting and repair procedures should only be performed by qualified personnel familiar with this equipment.

Electrical Power Lines (3)

This safety message is Located inside cab.

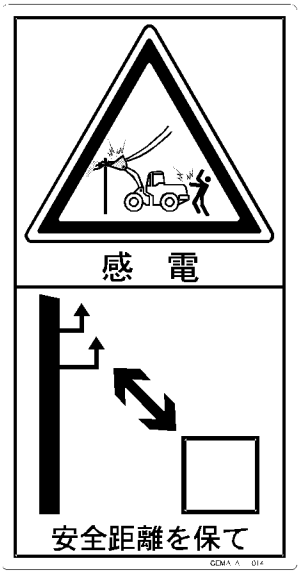

Illustration 5 g03094560

DANGER

Electrocution Hazard! Keep the machine and attachments a safe distance from electrical power. Stay clear 3 m (10 ft) plus twice the line insulator length. Read and understand the instructions and warnings in the Operation and Maintenance Manual. Failure to follow the instructions and warnings will cause serious injury or death

Crash Hazard (4)

This safety message is located inside cab.

Illustration 6 g03690403

WARNING

Stay back a safe distance. No clearance for a person in this area when the machine turns. Severe injury or death from crushing could occur.

Crushing Hazard (5)

This safety message is located inside cab.

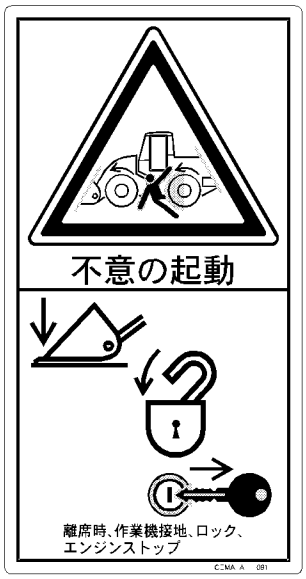

Illustration 7 g03094541

WARNING

Crush Hazard! A machine may move unexpectedly and without warning resulting in personal injury or death.

Before leaving the machine lower the work tool to the ground, lock operator controls, shut off the engine and remove the key.

High-Pressure Cylinder (6)

This Safety message is positioned on the track adjusters.

Illustration 8 g02061296

WARNING

High Pressure Cylinder. Do not remove any parts from the cylinder until all of the pressure has been relieved. This will prevent possible personal injury or death.

Rotating Fan (7)

This safety message is at the rear of the machine.

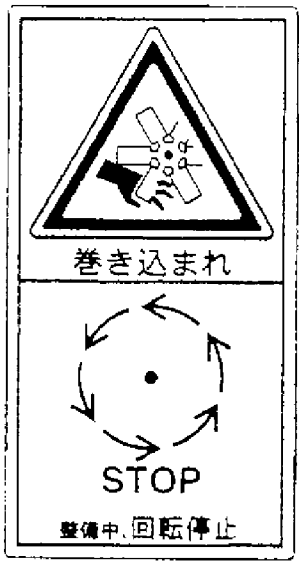

Illustration 9 g03369790

WARNING

Explosion Hazard! Improper jumper cable connections can cause an explosion resulting in serious injury or death. Batteries may be located in separate compartments. Refer to the Operation and Maintenance Manual for the correct jump starting procedure.

Cutting Hazard (8)

This safety message is at the rear of the machine.

Illustration 10 g02061677

WARNING

Cutting Hazard! Keep hands clear of fan while engine is running. May cause serious injury or death.

Jump-Start Cables (9)

This warning is at rear of the machine.

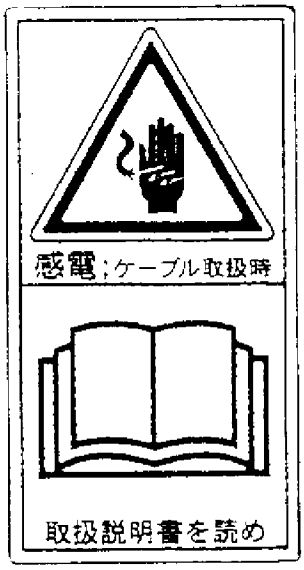

Illustration 11 g03369796

WARNING

Explosion Hazard! Improper jumper cable connections can cause an explosion resulting in serious injury or death. Batteries may be located in separate compartments. Refer to the Operation and Maintenance Manual for the correct jump starting procedure.

Falling Hazard (10)

This safety message is on lift arm.

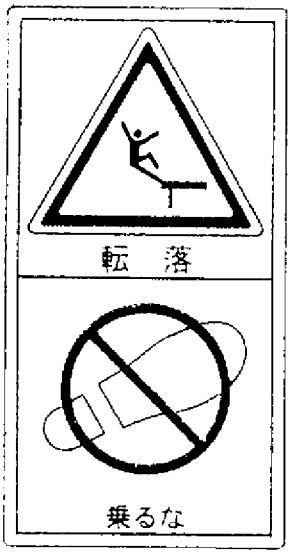

Illustration 12 g03369781

WARNING

Do not use this surface as a step or platform. This surface may not support additional weight or may be slippery. Serious injury or death could occur from a fall.

i09554147

Safety Messages

SMCS Code: 7000; 7405

There are several specific safety messages on this machine. The exact location of the hazards and the description of the hazards are reviewed in this section. Be familiar with all safety messages.

Make sure that all the safety messages are legible. Clean the safety messages or replace the safety messages if you cannot read the words. Replace the illustrations if the illustrations are not legible. When you clean the safety messages, use a cloth, water, and soap. Do not use solvent, gasoline, or other harsh chemicals to clean the safety messages. Solvents, gasoline, or harsh chemicals could loosen the adhesive that secures the safety message. Loose adhesive will allow the safety message to fall.

Replace any safety message that is damaged, or missing. If a safety message is attached to a part that is replaced, install a safety message on the replacement part. Any Cat dealer can provide new safety messages.

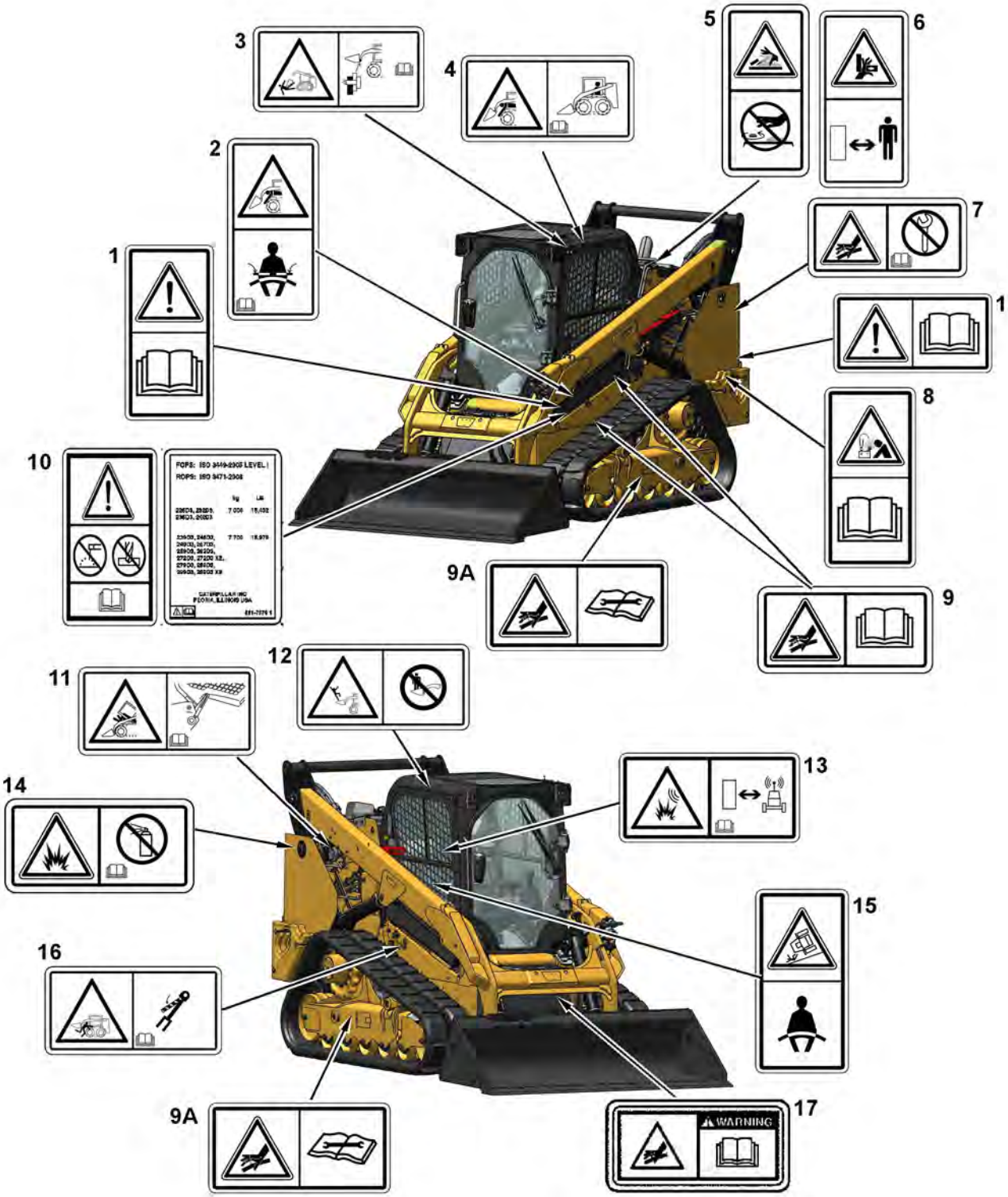

Illustration 13 g07489683

(1) Do Not Operate
(2) Armrests
(3) Work Tool Coupler
(4) Stay Inside Operator Station
(5) Pressurized System
(6) Crushing Hazard
(7) High-Pressure Cylinder
(8) Jump Starting
(9) Accumulator
(10) Rollover Protective Structure/Falling Object Protective Structure
(11) Cab Support
(12) Never Permit Riders
(13) Product Link
(14) Aerosol Starting Aid
(15) Seat Belt
(16) Brace for the Loader Lift Arms
(17) Pressure Vessel

Do Not Operate (1)

This warning film is located inside the cab on the left-hand rear ROPS post.

Illustration 14 g01379128

WARNING

Read and understand the instructions and warnings in the operation and maintenance manuals. Contact any Caterpillar dealer for replacement manuals. Proper care is your responsibility.

Be alert! Know work conditions. Note and avoid all hazards and obstructions. Keep by-standers away when operating.

Fasten seat belt and lower armrests.

Make certain all controls are in neutral position and start engine.

Disengage parking brake.

Machine controls are active.

Failure to follow the instructions or heed the warnings could result injury or death.

Do Not Operate (1) (Engine)

This message is also on the engine.

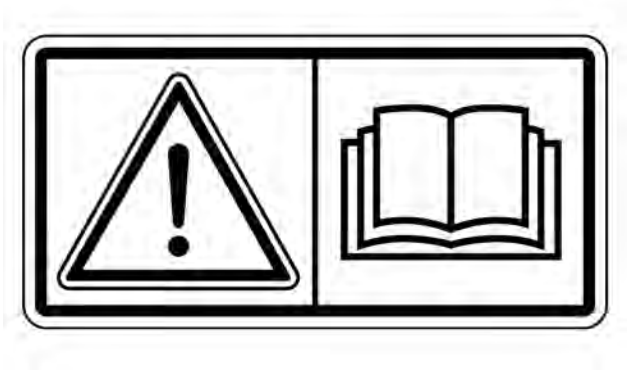

Illustration 15 g01370904

WARNING

Read and understand the instructions and warnings in the operation and maintenance manuals. Contact any Caterpillar dealer for replacement manuals. Proper care is your responsibility.

Be alert! Know work conditions. Note and avoid all hazards and obstructions. Keep by-standers away when operating.

Fasten seat belt and lower armrests.

Make certain all controls are in neutral position and start engine.

Disengage parking brake.

Machine controls are active.

Failure to follow the instructions or heed the warnings could result injury or death.

Armrests (2)

This warning message is located inside the cab on the left-hand joystick console.

Illustration 16 g01427454

WARNING

Crush/Ejection Hazard! Could cause serious injury or death.

Always wear seatbelt and lower both armrests while operating machine. Read the Operation and Maintenance Manual.

Work Tool Coupler (3)

This warning message is located inside the cab on the upper left-hand switch console.

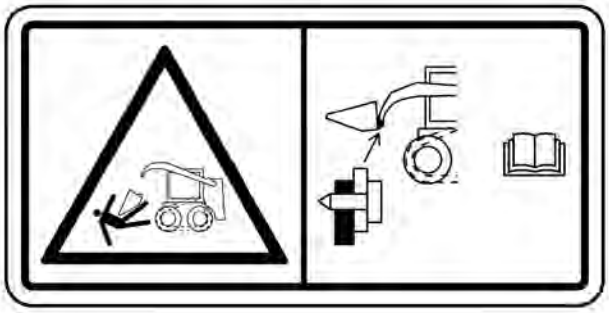

Illustration 17 g01427447

WARNING

Improper Attachment of the Work Tool could result in injury or death.

Do not operate the machine without confirmation that the coupler pins are fully engaged. Follow the operating procedures in the Operation and Maintenance Manual.

Refer to Operation and Maintenance Manual, “Work Tool Coupler Operation” for the proper procedure for the work tool coupler.

Stay Inside Operator Station (4)

This warning message is located inside the cab on the upper left-hand switch console.

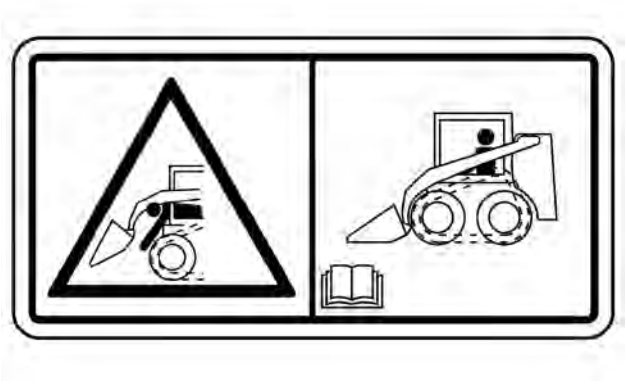

Illustration 18 g01427449

WARNING

Keep your body inside the operator station while operating the loader.

Never work with your arms, feet or legs beyond the operator station.

Failure to follow the instructions or heed the warnings will result in injury or death.

Pressurized System (5)

This warning message is on the radiator by the radiator cap.

Illustration 19 g01378799

WARNING

Pressurized system: Hot coolant can cause serious burn. To open cap, stop engine, wait until radiator is cool. Then loosen cap slowly to relieve the pressure.

Crush Hazard (6)

This warning is on the loader arm linkage of the machines that are equipped with vertical lift.

Illustration 20 g01378775

WARNING

No clearance for person in this area during operation. Severe injury or death from crushing could occur. Stay away from the work tool while it is in operation.

High-Pressure Fuel (7)

This safety message is located inside the engine compartment on the engine on or near the common rail fuel lines.

Illustration 21 g01381180

WARNING

Contact with high pressure fuel may cause fluid penetration and burn hazards. High pressure fuel spray may cause a fire hazard. Failure to follow these inspection, maintenance and service instructions may cause personal injury or death.

Jump-Start (8)

This warning message is located near the battery on the inside of the engine compartment.

Illustration 22 g01409730

WARNING

Improper jumper cable connections can cause explosion resulting in personal injury. Batteries may be located in separate compartments, always connect positive (+) cable to positive (+) terminal of battery connected to starter solenoid and negative (−) cable from external source to engine block or frame.

Accumulator (9)

This warning message is located near the accumulator behind the cab. If your machine is equipped with ride control, there will be an additional accumulator in this location.

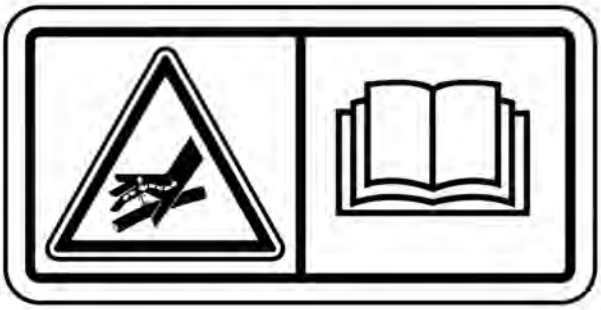

Illustration 23 g01371642

WARNING

Pressurized System!

Hydraulic accumulators contain gas and oil under high pressure. DO NOT disconnect lines or disassemble any component of a pressurized accumulator. All gas pre-charge must be removed from the accumulator as instructed by the service manual before servicing or disposing of the accumulator or any accumulator component.

Failure to follow the instructions and warnings could result in personal injury or death.

Only use dry nitrogen gas to recharge accumulators. See your Cat dealer for special equipment and detailed information for accumulator service and charging.

High-Pressure Cylinder (9A)

This safety message is on the undercarriage by the access panel. (Only on the CTL).

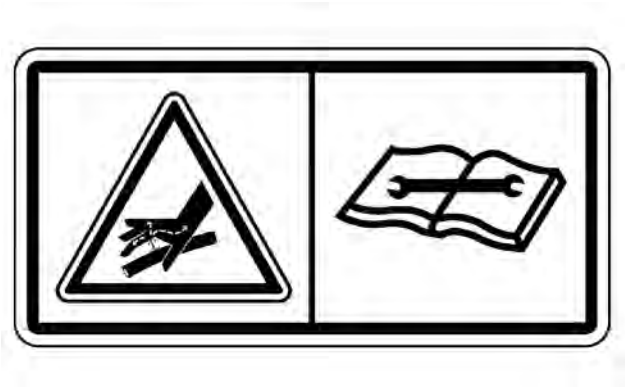

Illustration 24 g01372252

WARNING

Personal injury can result from grease under high pressure.

The adjuster cylinder for the track is under high hydraulic pressure. Grease under high pressure can cause injury.

Do not visually inspect the adjuster cylinder to see if grease is released when the valve is opened. Look to see that the track has loosened.

Refer to Operation and Maintenance Manual, “Track - Inspect/Adjust (Detension the Track)” for more information.

Rollover Protective Structure/ Falling Object Protective Structure (10)

The no drill/no weld warning film is located inside the cab on the left-hand rear ROPS post. The ROPS certification film is located inside the cab on the right-hand rear ROPS post.

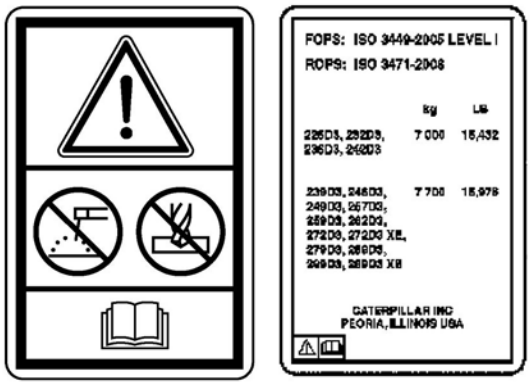

Illustration 25 g07489684

WARNING

Structural damage, an overturn, modification, alteration, or improper repair can impair this structure's protection capability thereby voiding this certification. Do not weld on or drill holes in the structure. Consult a Caterpillar dealer to determine this structure's limitations without voiding its certification.

Certification for Rollover Protective Structure (ROPS) and for Falling Object Protective Structure (FOPS)

The unaltered ROPS or the FOPS structure meets the following standards for the ROPS at the time of installation: ISO 3471-2008 and GB/T 17922-2014. Also, the FOPS canopy meets the following standards at the time of installation: ISO 3449-2005 LEVEL II and GB/T 17771-2010 LEVEL II.

This machine has been certified to the standards that are listed on the certification plate. The maximum mass of the machine, which includes the operator and the attachments without a payload, should not exceed the mass on the certification film.

Cab Support (11)

This warning message is located outside the cab on the right-hand side near the cab support latch.

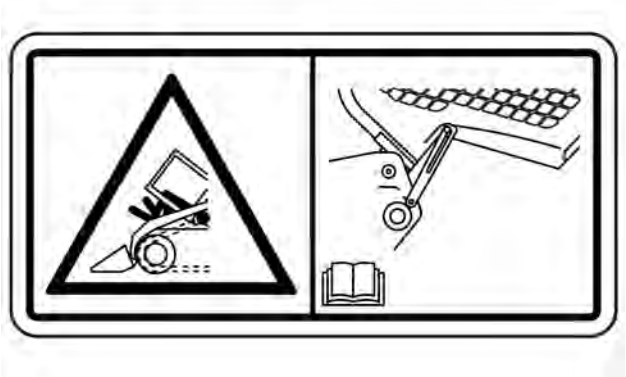

Illustration 26 g02708397

WARNING

Do not go beneath cab unless cab is empty and support lever is engaged.

Failure to follow the instructions or heed the warnings could result in injury or death.

Never Permit Riders (12)

This warning message is located inside the cab on the upper right-hand switch console.

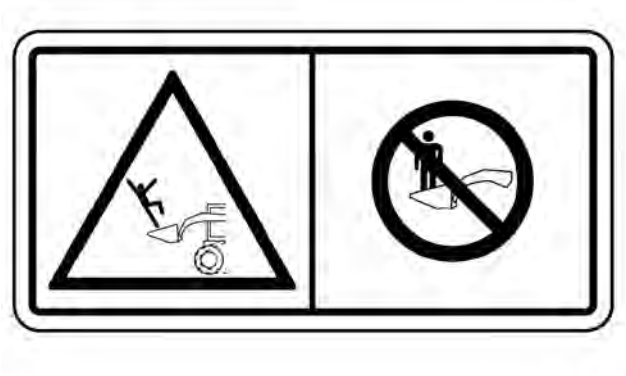

Illustration 27 g01427444

WARNING

Never permit riders.

Never use work tool for a work platform.

Failure to follow the instructions or heed the warnings could result in injury or death.

Product Link (If equipped) (13)

This safety message is located inside the cab on the right-hand window.

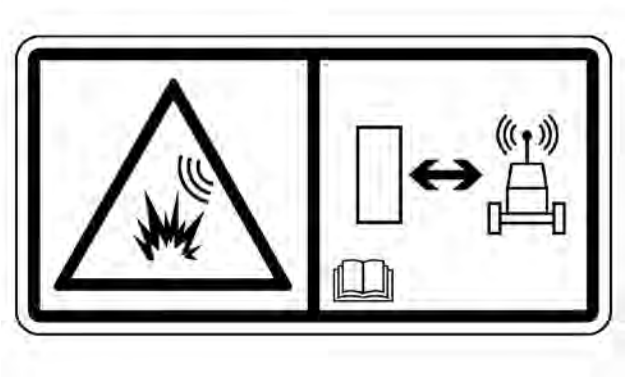

Illustration 28 g01370917

WARNING

This machine is equipped with a Caterpillar Product Link communication device. When electric detonators are used, this communication device should be deactivated within 12 m (40 ft) of a blast site for satellite-based systems and within 3 m (10 ft) of a blast site for cellular based systems, or within the distance mandated under applicable legal requirements. Failure to do so could cause interference with blasting operations and result in serious injury or death.

In cases where the type of Product Link module cannot be identified, Caterpillar recommends that the device be disabled no less than 12 m (40 ft) from the blast perimeter.

Aerosol Starting Aid (14)

This warning message is on the side of the air cleaner housing or inside the engine compartment on the frame wall near the air cleaner.

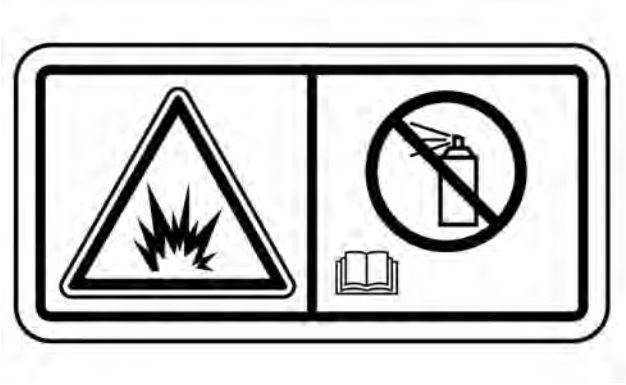

Illustration 29 g01372254

WARNING

Do not use ether. This machine is equipped with glow plugs. Using ether can create explosions or fires that can cause personal injury or death. Read and follow the engine starting procedure in the Operation and Maintenance Manual.

Seat Belt (15)

This warning message is located inside the cab on the right-hand joystick console.

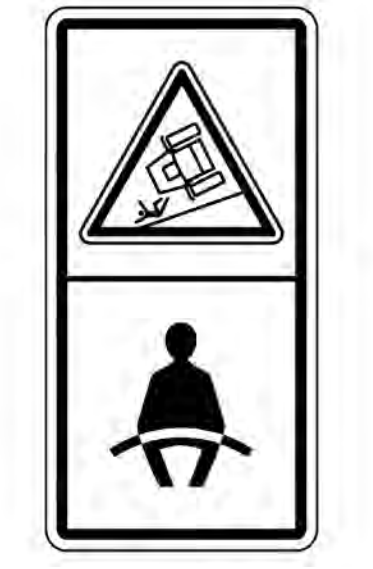

Illustration 30 g01371636

WARNING

A seat belt should be worn at all times during machine operation to prevent serious injury or death in the event of an accident or machine overturn. Failure to wear a seat belt during machine operation may result in serious injury or death.

Refer to Operation and Maintenance Manual, “Seat Belt” for more information.

Brace for the Loader Lift Arms (16)

This warning message is on the brace for the loader lift arms.

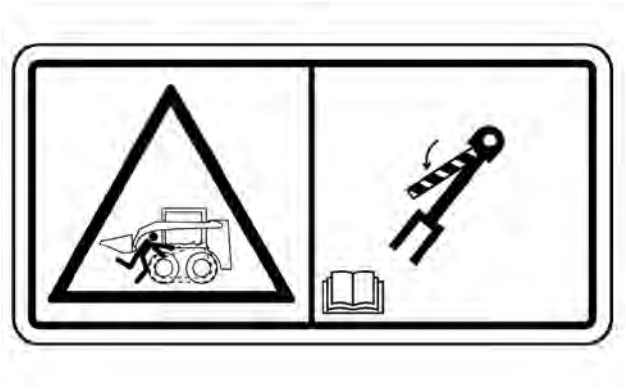

Illustration 31 g01427443

WARNING

Loader lift arm brace must be in place when working under raised lift arms.

Failure to follow the instructions or heed the warnings could result in injury or death.

Refer to Operation and Maintenance Manual, “Loader Lift Arm Brace Operation” for operating information.

Pressure Vessel (17)

If equipped with Fire Suppression System, this warning message is located under the cab, in the belly of the machine on the front sheet of the machine's lower frame.

Illustration 32 g06489616

WARNING

High-pressure spray can penetrate body which could cause serious injury or death.

Read the operator's manual.

Work Tools

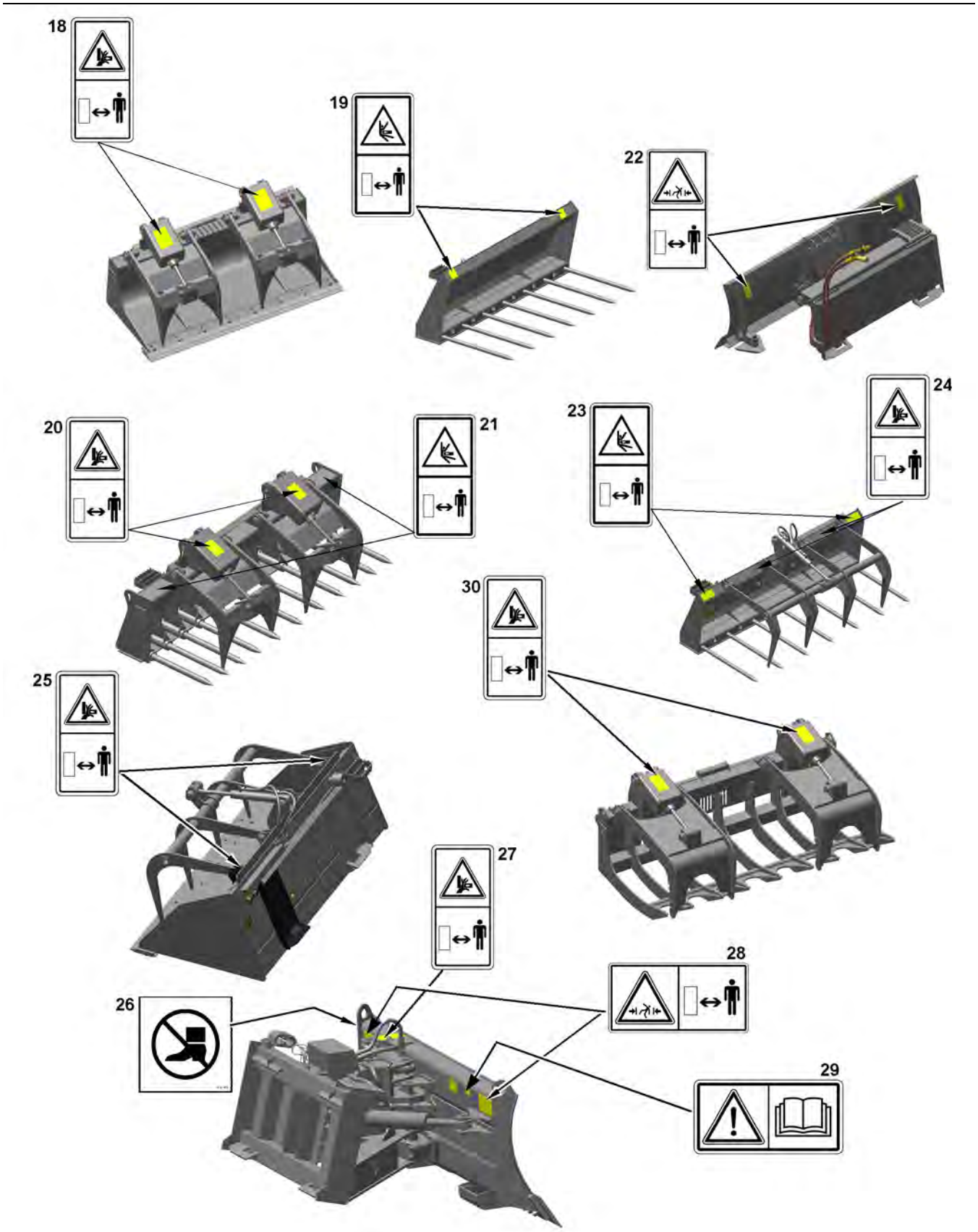
18
19
22
20
21
23
24
30
25
27
28
26
29

Illustration 33 g06491088

WorkTools

WARNING

Do not operate or work on this work tool unless you have read and understand the instructions and warnings in the Operation And Maintenance Manual for both the work tool and the host machine.

Failure to follow the instructions or heed the warnings could result in injury or death.

Contact your Caterpillar dealer for replacement manuals. Proper care is your responsibility.

Industrial Grapple Bucket (18)

These warning messages are on top of the guards for the grapple cylinders.

Illustration 34 g01378775

WARNING

No clearance for person in this area during operation. Severe injury or death from crushing could occur. Stay away from the work tool while it is in operation.

Utility Fork (19)

These warning messages are on top of the fork carriage.

Illustration 35 g01389170

WARNING

No clearance for person in this area during operation. Severe injury or death from impalement could occur. Stay away from the work tool while it is in operation.

Industrial Grapple Fork (20)

These warning messages are on the guards for the grapple cylinders.

Illustration 36 g01378775

WARNING

No clearance for person in this area during operation. Severe injury or death from crushing could occur. Stay away from the work tool while it is in operation.

Industrial Grapple Fork (21)

These warning messages are on top of the fork carriage.

Illustration 37 g01389170

WARNING

No clearance for person in this area during operation. Severe injury or death from impalement could occur. Stay away from the work tool while it is in operation.

Angle Blade (22)

These warning messages are on the back side of the blade.

Illustration 38 g01377717

WARNING

No clearance for person in this area during operation. Severe injury or death from crushing could occur. Stay away from the work tool while it is in operation.

Utility Grapple Fork (23)

These warning messages are on top of the fork carriage.

Illustration 39 g01389170

WARNING

No clearance for person in this area during operation. Severe injury or death from impalement could occur. Stay away from the work tool while it is in operation.

Utility Grapple Fork (24)

These warning messages are on top of the grapple frame.

Illustration 40 g01378775

WARNING

No clearance for person in this area during operation. Severe injury or death from crushing could occur. Stay away from the work tool while it is in operation.

Utility Grapple Bucket (25)

These warning messages are on top of the grapple frame.

Illustration 41 g01378775

WARNING

No clearance for person in this area during operation. Severe injury or death from crushing could occur. Stay away from the work tool while it is in operation.

Dozer Blade (26)

This warning message is on top of the dozer blade.

Illustration 42 g00946617

WARNING

Falling Hazard - Area may be oily and slippery. Do not step on cylinders. Serious injury or death could occur from a fall.

Dozer Blade (27)

This warning message is on top of the dozer blade.

Illustration 43 g01378775

WARNING

No clearance for person in this area during operation. Severe injury or death from crushing could occur. Stay away from the work tool while it is in operation.

Dozer Blade (28)

These warning messages are on the back side of the blade.

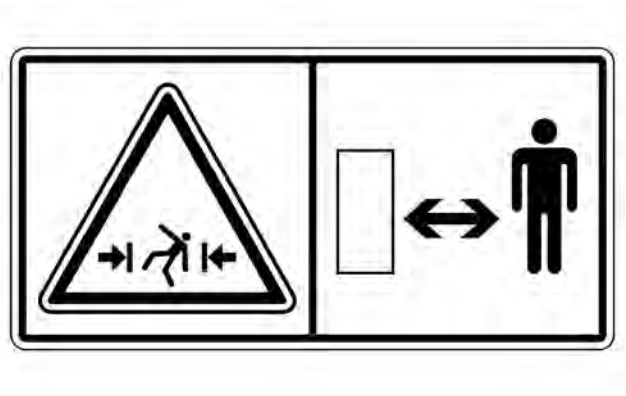

Illustration 44 g01371644

WARNING

No clearance for person in this area during operation. Severe injury or death from crushing could occur. Stay away from the work tool while it is in operation.

Dozer Blade (29)

This warning is on right-hand side on the back of the blade.

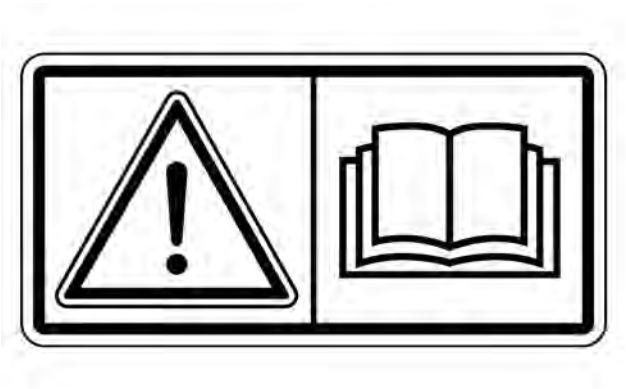

Illustration 45 g01370904

WARNING

Do not operate or work on this product unless you have read and understood the instructions and warnings in the relevant Operation and Maintenance Manuals and relevant service literature. Failure to follow the instructions or heed the warnings could result in injury or death. Proper care is your responsibility.

Grapple Rake (30)

These warning messages are on top of the grapple frame.

Illustration 46 g01378775

WARNING

No clearance for person in this area during operation. Severe injury or death from crushing could occur. Stay away from the work tool while it is in operation.

i07942612

Additional Messages

SMCS Code: 7000; 7405

There are several specific messages on this machine. The exact location of the messages and the description of the messages are reviewed in this section. Become familiarized with all messages.

Make sure that all the messages are legible. Clean the messages or replace the messages if you cannot read the words. Replace the illustrations if the illustrations are not legible. When you clean the messages, use a cloth, water, and soap. Do not use solvent, gasoline, or other harsh chemicals to clean the messages. Solvents, gasoline, or harsh chemicals could loosen the adhesive that secures the messages. Loose adhesive will allow the messages to fall.

Replace any message that is damaged, or missing. If a message is attached to a part that is replaced, install a message on the replacement part. Any Cat dealer can provide new messages.

Alternate Exit

This message is located inside the cab on the window glass.

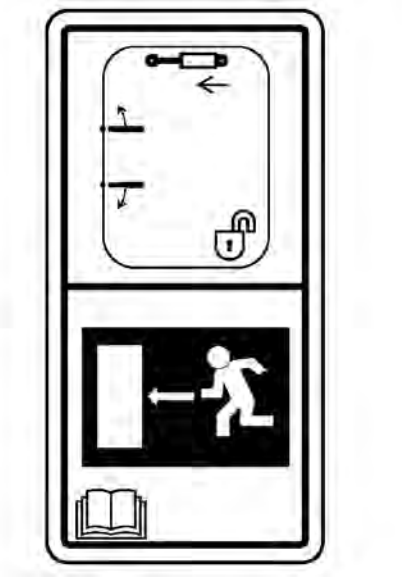

Illustration 47 g01260324

The primary alternate exit is the rear window. However, the front door may also be used if necessary. Refer to Operation and Maintenance Manual, “Alternate Exit” for detailed instructions.

Air Conditioner (If Equipped)

This message is located under the cab, attached to the air conditioning line near the service port.

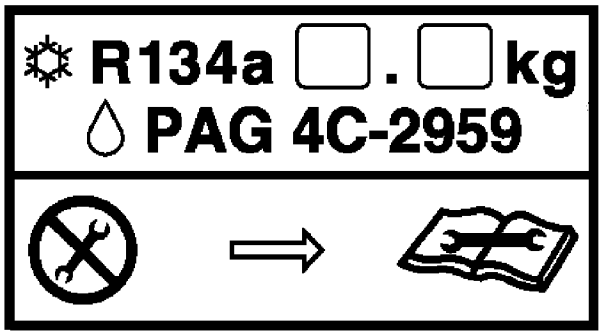

Illustration 48 g00990500

Read the service manual before you perform any maintenance on the air conditioner.

Air Conditioner Refrigerant (If Equipped)

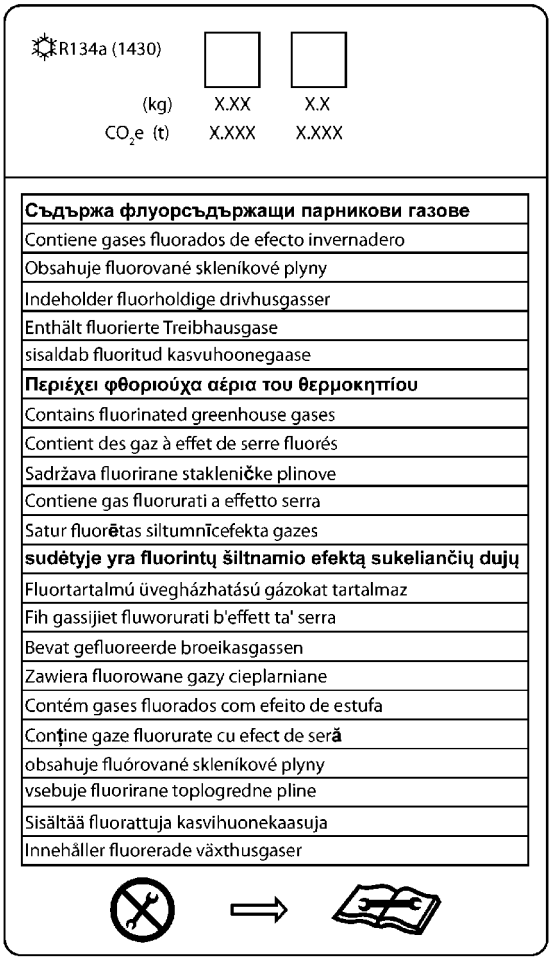

Illustration 49 g06156136

If equipped, this message is located underneath the cab near the charge ports of the AC system.

Do not service the air conditioner system unless you are following the correct maintenance/repair procedures specified in the Service Manual.

R134a is a fluorinated greenhouse gases with a Global Warming Potential of 1430. “CO2e” means the CO2 equivalent. This product contains R134a. The amount of R134a and the CO2e for this product is indicated by the tick box. The chart below shows the appropriate R134a and CO2e levels for each machine.

Table 1

Sales Model	Weight	CO2e
246D3, 262D3, 277D3, 279D3, 289D3	1.0 kg	1.430 t
226D3, 232D3, 239D3, 249D3, 236D3, 242D3, 257D3, 259D3, 272D3, 272D3 XE, 299D3, 299D3 XE	0.81 kg	1.158 t

No Step

This message is located in areas that prohibit standing.

Illustration 50 g01206181

Do not step in these locations. Do not stand in these locations.

Product Link (If Equipped)

If equipped, this following message is located in the cab on the left post.

Illustration 51 g01418953

Machine Hydraulic System

This machine hydraulic system is filled with Cat HYDO Advanced oil. The following message is located by the hydraulic tank.

Illustration 52 g02096113

Refer to Operation and Maintenance Manual, “Lubricant Viscosities” for more information about the hydraulic oil.

DEF Purge (If Equipped)

DEF purge indicator lamp film is located inside the engine compartment near the battery disconnect switch on machines that require DEF usage.

Note: If the machine does not have a battery disconnect switch installed this film is not used.

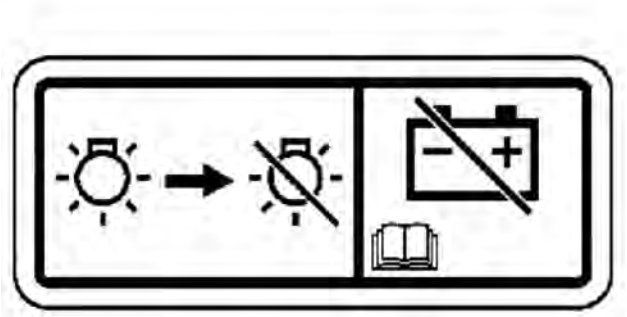

Illustration 53 g03816765

NOTICE
Wait until light shuts off to apply the battery disconnect. This waiting period will allow the DEF system to be purged. Purging prevents DEF from freezing in the lines.

DEF Fill (If Equipped)

DEF fill film is on the right-hand side of the machine near the DEF fill access door.

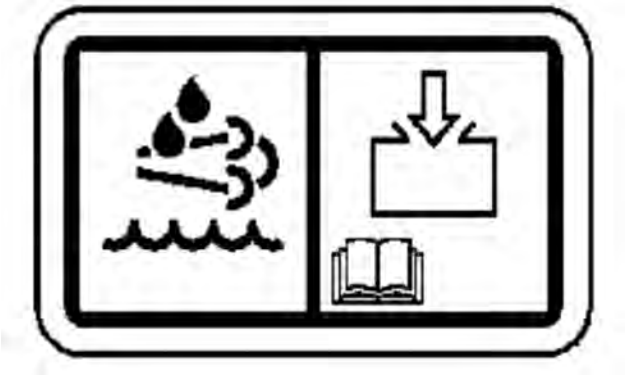

Illustration 54 g03816783

Automatic Fire Protection System

This film is located in the cab, on the underside of the bracket to which the Fire Suppression system controller is mounted, on the upper switch panel machine left-hand side.

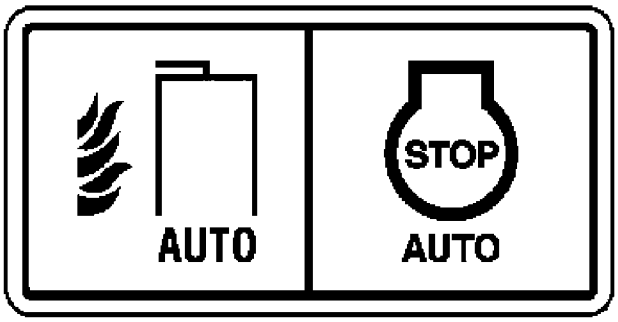

Illustration 55 g06489632

Manual Actuator

This film is located in the engine compartment on the right-hand side next to the Fire Suppression system's manual actuator.

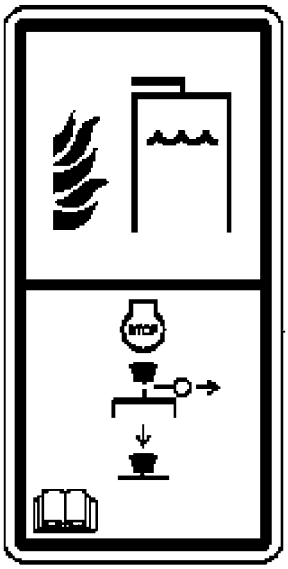

Illustration 56 g06489635

Japanese Market Only

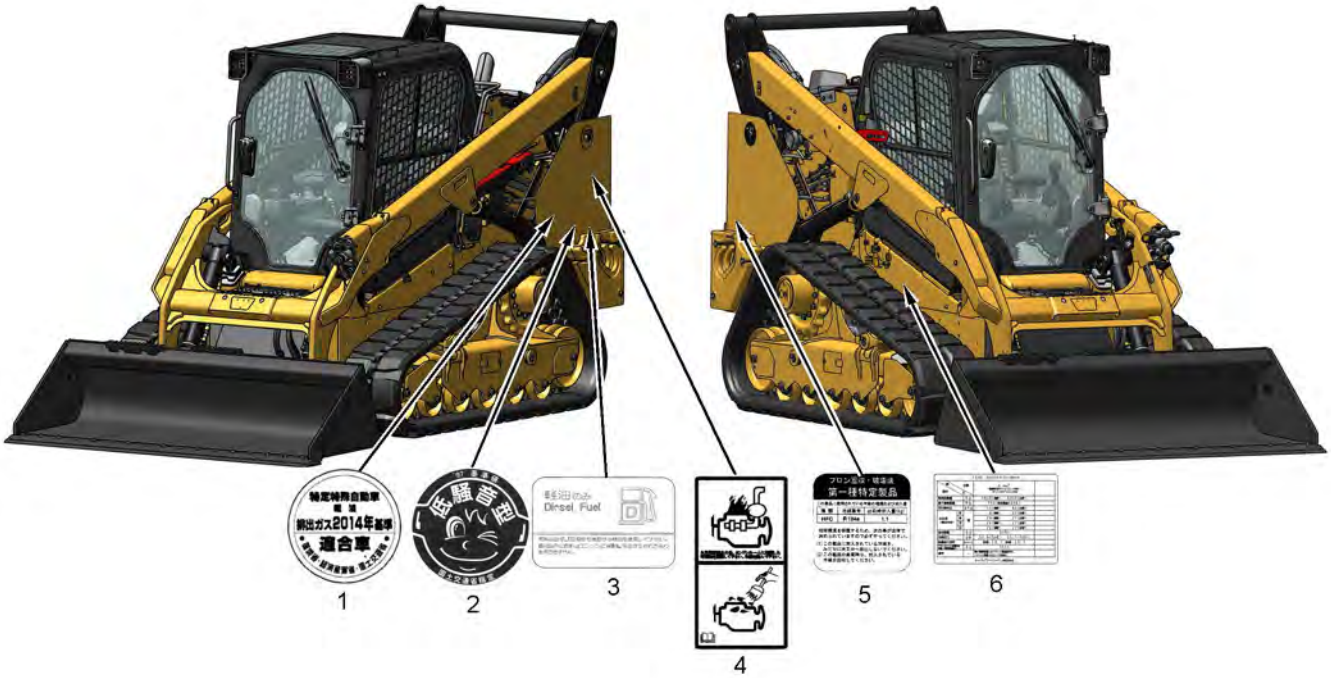

Illustration 57 g06405641

Emissions (1)

This message is on the left side of the machine.

Illustration 58 g03866756

Low Sound Certification (2)

This message is on the left side of the machine.

Illustration 59 g03316436

Diesel Fuel (3)

This message is at the rear of the machine.

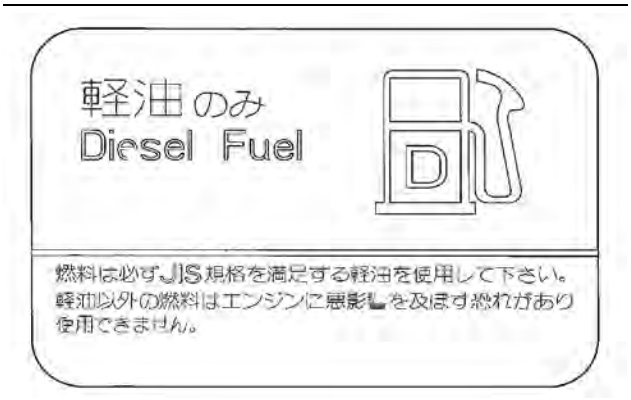

Illustration 60 g03146321

Clean Engine (4)

This message is at the rear of the machine.

Illustration 61 g03146323

Recycle HFC Refrigerant (5)

This message is at the rear of the machine.

Illustration 62 g03351365

OSHA Plate (6)

This message is at rear side of the machine.

Illustration 63 g06177907

i05793252

General Hazard Information
(Only Japanese market)

SMCS Code: 7000

Illustration 64 g03253902

Attach a “Do Not Operate” , or a similar warning tag to the start switch or to the controls before you service or repair the equipment. These warning tags (Special Instruction, RJX88874) are available from your Cat dealer.

i08313103

General Hazard Information

SMCS Code: 7000

Illustration 65 g00104545

Typical example

Attach a “Do Not Operate” warning tag or a similar warning tag to the start switch or to the controls. Attach the warning tag before you service the equipment or before you repair the equipment. Warning tag SEHS7332 is available from your Cat dealer.

WARNING

Operating the machine while distracted can result in the loss of machine control. Use extreme caution when using any device while operating the machine. Operating the machine while distracted can result in personal injury or death.

Know the width of your equipment to maintain proper clearance when you operate the equipment near fences or near boundary obstacles.

Be aware of high-voltage power lines and power cables that are buried. If the machine comes in contact with these hazards, serious injury or death may occur from electrocution.

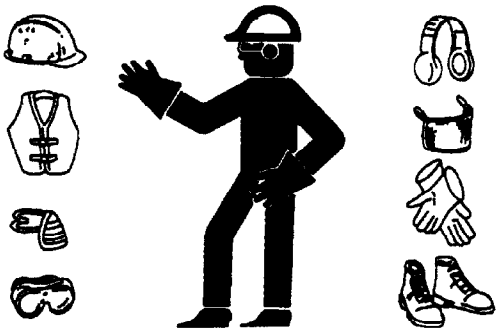

Illustration 66 g00702020

Wear a hard hat, protective glasses, and other protective equipment, as required.

Do not wear loose clothing or jewelry that can snag on controls or on other parts of the equipment.

Make sure that all protective guards and all covers are secured in place on the equipment.

Keep the equipment free from foreign material. Remove debris, oil, tools, and other items from the deck, from walkways, and from steps.

Secure all loose items such as lunch boxes, tools, and other items that are not a part of the equipment.

Know the appropriate work site hand signals and the personnel that are authorized to give the hand signals. Accept hand signals from one person only.

Do not smoke when you service an air conditioner. Also, do not smoke if refrigerant gas may be present. Inhaling the fumes that are released from a flame that contacts air conditioner refrigerant can cause bodily harm or death. Inhaling gas from air conditioner refrigerant through a lighted cigarette can cause bodily harm or death.

Never put maintenance fluids into glass containers. Drain all liquids into a suitable container.

Obey all local regulations for the disposal of liquids.

Use all cleaning solutions with care. Report all necessary repairs.

Do not allow unauthorized personnel on the equipment.

Unless you are instructed otherwise, perform maintenance with the equipment in the servicing position. Refer to Operation and Maintenance Manual for the procedure for placing the equipment in the servicing position.

When you perform maintenance above ground level, use appropriate devices such as ladders or man lift machines. If equipped, use the machine anchorage points and use approved fall arrest harnesses and lanyards.

Pressurized Air and Water

Pressurized air and/or water can cause debris and/or hot water to be blown out. The debris and/or hot water could result in personal injury.

When pressurized air and/or pressurized water is used for cleaning, wear protective clothing, protective shoes, and eye protection. Eye protection includes goggles or a protective face shield.

The maximum air pressure for cleaning purposes must be reduced to 205 kPa (30 psi) when the nozzle is deadheaded and the nozzle is used with an effective chip deflector and personal protective equipment. The maximum water pressure for cleaning purposes must be below 275 kPa (40 psi).

Avoid direct spraying of water on electrical connectors, connections, and components. When using air for cleaning, allow the machine to cool to reduce the possibility of fine debris igniting when re-deposited on hot surfaces.

Trapped Pressure

Pressure can be trapped in a hydraulic system. Releasing trapped pressure can cause sudden machine movement or attachment movement. Use caution if you disconnect hydraulic lines or fittings. High-pressure oil that is released can cause a hose to whip. High-pressure oil that is released can cause oil to spray. Fluid penetration can cause serious injury and possible death.

Fluid Penetration

Pressure can be trapped in the hydraulic circuit long after the machine has been stopped. The pressure can cause hydraulic fluid or items such as pipe plugs to escape rapidly if the pressure is not relieved correctly.

Do not remove any hydraulic components or parts until pressure has been relieved or personal injury may occur. Do not disassemble any hydraulic components or parts until pressure has been relieved or personal injury may occur. Refer to the Service Manual for any procedures that are required to relieve the hydraulic pressure.

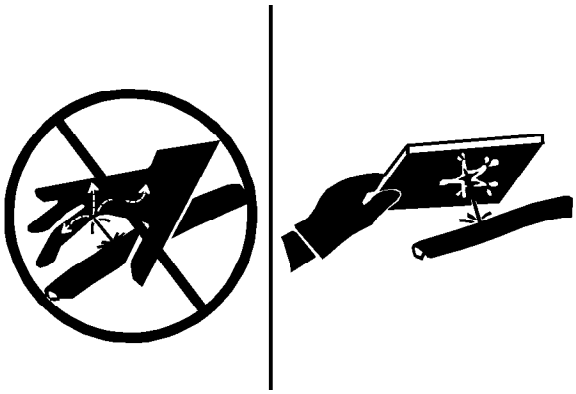

Illustration 67 g00687600

Always use a board or cardboard when you check for a leak. Leaking fluid that is under pressure can penetrate body tissue. Fluid penetration can cause serious injury and possible death. A pin hole leak can cause severe injury. If fluid is injected into your skin, you must get treatment immediately. Seek treatment from a doctor that is familiar with this type of injury.

Containing Fluid Spillage

Care must be taken in order to ensure that fluids are contained during performance of inspection, maintenance, testing, adjusting, and repair of the equipment. Prepare to collect the fluid with suitable containers before opening any compartment or disassembling any component that contains fluids.

Refer to Special Publication, NENG2500, “Cat dealer Service Tool Catalog” for the following items:

- Tools that are suitable for collecting fluids and equipment that is suitable for collecting fluids
- Tools that are suitable for containing fluids and equipment that is suitable for containing fluids

Obey all local regulations for the disposal of liquids.

Inhalation

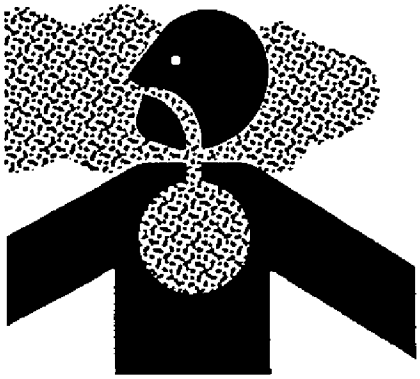

Illustration 68 g02159053

Exhaust

Use caution. Exhaust fumes can be hazardous to your health. If you operate the machine in an enclosed area, adequate ventilation is necessary.

Asbestos Information

Cat equipment and replacement parts that are shipped from Caterpillar are asbestos free. Caterpillar recommends the use of only genuine Cat replacement parts. Use the following guidelines when you handle any replacement parts that contain asbestos or when you handle asbestos debris.

Use caution. Avoid inhaling dust that might be generated when you handle components that contain asbestos fibers. Inhaling this dust can be hazardous to your health. The components that may contain asbestos fibers are brake pads, brake bands, lining material, clutch plates, and some gaskets. The asbestos that is used in these components is bound in a resin or sealed in some way. Normal handling is not hazardous unless airborne dust that contains asbestos is generated.

If dust that may contain asbestos is present, there are several guidelines that should be followed:

- Never use compressed air for cleaning.
- Avoid brushing materials that contain asbestos.
- Avoid grinding materials that contain asbestos.
- Use a wet method in order to clean up asbestos materials.
- A vacuum cleaner that is equipped with a high efficiency particulate air filter (HEPA) can also be used.
- Use exhaust ventilation on permanent machining jobs.
- Wear an approved respirator if there is no other way to control the dust.
- Comply with applicable rules and regulations for the work place. In the United States, use Occupational Safety and Health Administration (OSHA) requirements. These OSHA requirements can be found in “29 CFR 1910.1001”. In Japan, use the requirements found in the “Ordinance on Prevention of Health Impairment due to Asbestos” in addition to the requirements of the Industrial Safety and Health Act.
- Obey environmental regulations for the disposal of asbestos.
- Stay away from areas that might have asbestos particles in the air.

Hexavalent Chromium Information

Cat equipment and replacement parts comply with applicable regulations and requirements where originally sold. Caterpillar recommends the use of only genuine Cat replacement parts.

Hexavalent chromium has occasionally been detected on exhaust and heat shield systems on Cat engines. Although lab testing is the only accurate way to know if hexavalent chromium is, in fact, present, the presence of a yellow deposit in areas of high heat (for example, exhaust system components or exhaust insulation) may be an indication of the presence of hexavalent chromium.

Use caution if you suspect the presence of hexavalent chromium. Avoid skin contact when handling items that you suspect may contain hexavalent chromium, and avoid inhalation of any dust in the suspect area. Inhalation of, or skin contact with, hexavalent chromium dust may be hazardous to your health.

If such yellow deposits are found on the engine, engine component parts, or associated equipment or packages, Caterpillar recommends following local health and safety regulations and guidelines, utilizing good hygiene, and adhering to safe work practices when handling the equipment or parts. Caterpillar also recommends the following:

- Wear appropriate personal protective equipment (PPE).
- Wash your hands and face with soap and water prior to eating, drinking, or smoking, and also during rest room breaks, to prevent ingestion of any yellow powder.
- Never use compressed air for cleaning areas suspected of containing hexavalent chromium.

- Avoid brushing, grinding, or cutting materials suspected of containing hexavalent chromium.
- Obey environmental regulations for the disposal of all materials that may contain or have come into contact with hexavalent chromium.
- Stay away from areas that might have hexavalent chromium particles in the air.

Dispose of Waste Properly

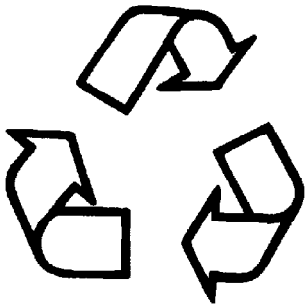

Illustration 69 g00706404

Improperly disposing of waste can threaten the environment. Potentially harmful fluids should be disposed of according to local regulations.

Always use leakproof containers when you drain fluids. Do not pour waste onto the ground, down a drain, or into any source of water.

i01359664

Crushing Prevention and Cutting Prevention

SMCS Code: 7000

Support the equipment properly before you perform any work or maintenance beneath that equipment. Do not depend on the hydraulic cylinders to hold up the equipment. Equipment can fall if a control is moved, or if a hydraulic line breaks.

Do not work beneath the cab of the machine unless the cab is properly supported.

Unless you are instructed otherwise, never attempt adjustments while the machine is moving or while the engine is running.

Never jump across the starter solenoid terminals in order to start the engine. Unexpected machine movement could result.

Whenever there are equipment control linkages the clearance in the linkage area will change with the movement of the equipment or the machine. Stay clear of areas that may have a sudden change in clearance with machine movement or equipment movement.

Stay clear of all rotating and moving parts.

If it is necessary to remove guards in order to perform maintenance, always install the guards after the maintenance is performed.

Keep objects away from moving fan blades. The fan blade will throw objects or cut objects.

Do not use a kinked wire cable or a frayed wire cable. Wear gloves when you handle wire cable.

When you strike a retainer pin with force, the retainer pin can fly out. The loose retainer pin can injure personnel. Make sure that the area is clear of people when you strike a retainer pin. To avoid injury to your eyes, wear protective glasses when you strike a retainer pin.

Chips or other debris can fly off an object when you strike the object. Make sure that no one can be injured by flying debris before striking any object.

i05160631

Burn Prevention

SMCS Code: 7000

Do not touch any part of an operating engine. Allow machine systems to cool before any maintenance is performed. Relieve all pressure in the air system, in the oil system, in the lubrication system, in the fuel system, or in the cooling system before any lines, fittings, or related items are disconnected.

Exhaust Gas Recirculation Cooler

The exhaust gas recirculation (EGR) cooler may contain a small amount of sulfuric acid. The use of fuel with sulfur levels greater than 15 ppm may increase the amount of sulfuric acid that is formed. The sulfuric acid may spill from the EGR cooler during service of the engine. The sulfuric acid will burn the eyes, skin, and clothing on contact. Always wear eye shields, rubber gloves, and protective clothing when you may come in contact with fluids that may spill from the EGR cooler. If fluid contacts the eyes, immediately flush with water and seek medical help.

Coolant

When the engine is at operating temperature, the engine coolant is hot. The coolant is also under pressure. The radiator and all lines to the heaters or to the engine contain hot coolant.

Any contact with hot coolant or with steam can cause severe burns. Allow cooling system components to cool before the cooling system is drained.

Check the coolant level only after the engine has been stopped.

Ensure that the filler cap is cool before removing the filler cap. The filler cap must be cool enough to touch with a bare hand. Remove the filler cap slowly in order to relieve pressure.

Cooling system conditioner contains alkali. Alkali can cause personal injury. Do not allow alkali to contact the skin, the eyes, or the mouth.

Oils

Hot oil and hot components can cause personal injury. Do not allow hot oil to contact the skin. Also, do not allow hot components to contact the skin.

Remove the hydraulic tank filler cap only after the engine has been stopped. The filler cap must be cool enough to touch with a bare hand. Follow the standard procedure in this manual in order to remove the hydraulic tank filler cap.

Batteries

Electrolyte is an acid. Electrolyte can cause personal injury. Do not allow electrolyte to contact the skin or the eyes. Always wear protective glasses for servicing batteries. Wash hands after touching the batteries and connectors. Use of gloves is recommended.

i06179517

Fire Prevention and Explosion Prevention

SMCS Code: 7000

Illustration 70 g00704000

Regeneration

The exhaust gas temperatures during regeneration will be elevated. Follow proper fire prevention instructions and use the disable regeneration function (if equipped) when appropriate.

General

All fuels, most lubricants, and some coolant mixtures are flammable.

To minimize the risk of fire or explosion, Caterpillar recommends the following actions.

Always perform a Walk-Around Inspection, which may help you identify a fire hazard. Do not operate a machine when a fire hazard exists. Contact your Cat dealer for service.

Understand the use of the primary exit and alternative exit on the machine. Refer to Operation and Maintenance Manual, “Alternative Exit”.

Do not operate a machine with a fluid leak. Repair leaks and clean up fluids before resuming machine operation. Fluids that are leaking or spilled onto hot surfaces or onto electrical components can cause a fire. A fire may cause personal injury or death.

Remove flammable material such as leaves, twigs, papers, trash, and so on. These items may accumulate in the engine compartment or around other hot areas and hot parts on the machine.

Keep the access doors to major machine compartments closed and access doors in working condition in order to permit the use of fire suppression equipment, in case a fire should occur.

Clean all accumulations of flammable materials such as fuel, oil, and debris from the machine.

Do not operate the machine near any flame.

Keep shields in place. Exhaust shields (if equipped) protect hot exhaust components from oil spray or fuel spray in a break in a line, in a hose, or in a seal. Exhaust shields must be installed correctly.

Do not weld or flame cut on tanks or lines that contain flammable fluids or flammable material. Empty and purge the lines and tanks. Then clean the lines and tanks with a nonflammable solvent prior to welding or flame cutting. Ensure that the components are properly grounded in order to avoid unwanted arcs.

Dust that is generated from repairing nonmetallic hoods or fenders may be flammable and/or explosive. Repair such components in a ventilated area away from open flames or sparks. Use suitable Personal Protection Equipment (PPE).

Inspect all lines and hoses for wear or deterioration. Replace damaged lines and hoses. The lines and the hoses should have adequate support and secure clamps. Tighten all connections to the recommended torque. Damage to the protective cover or insulation may provide fuel for fires.

Store fuels and lubricants in properly marked containers away from unauthorized personnel. Store oily rags and flammable materials in protective containers. Do not smoke in areas that are used for storing flammable materials.

Illustration 71 g03839130

Use caution when you are fueling a machine. Do not smoke while you are fueling a machine. Do not fuel a machine near open flames or sparks. Do not use cell phones or other electronic devices while you are refueling. Always stop the engine before fueling. Fill the fuel tank outdoors. Properly clean areas of spillage.

Avoid static electricity risk when fueling. Ultra low sulfur diesel (ULSD) poses a greater static ignition hazard than earlier diesel formulations with a higher sulfur content. Avoid death or serious injury from fire or explosion. Consult with your fuel or fuel system supplier to ensure that the delivery system is in compliance with fueling standards for proper grounding and bonding practices.

Never store flammable fluids in the operator compartment of the machine.

Battery and Battery Cables

Illustration 72 g03839133

Caterpillar recommends the following in order to minimize the risk of fire or an explosion related to the battery.

Do not operate a machine if battery cables or related parts show signs of wear or damage. Contact your Cat dealer for service.

Follow safe procedures for engine starting with jump-start cables. Improper jumper cable connections can cause an explosion that may result in injury. Refer to Operation and Maintenance Manual, “Engine Starting with Jump Start Cables” for specific instructions.

Do not charge a frozen battery. This may cause an explosion.

Gases from a battery can explode. Keep any open flames or sparks away from the top of a battery. Do not smoke in battery charging areas. Do not use cell phones or other electronic devices in battery charging areas.

Never check the battery charge by placing a metal object across the terminal posts. Use a voltmeter in order to check the battery charge.

Daily inspect battery cables that are in areas that are visible. Inspect cables, clips, straps, and other restraints for damage. Replace any damaged parts. Check for signs of the following, which can occur over time due to use and environmental factors:

- Fraying
- Abrasion
- Cracking
- Discoloration
- Cuts on the insulation of the cable
- Fouling
- Corroded terminals, damaged terminals, and loose terminals

Replace damaged battery cable(s) and replace any related parts. Eliminate any fouling, which may have caused insulation failure or related component damage or wear. Ensure that all components are reinstalled correctly.

An exposed wire on the battery cable may cause a short to ground if the exposed area comes into contact with a grounded surface. A battery cable short produces heat from the battery current, which may be a fire hazard.

An exposed wire on the ground cable between the battery and the disconnect switch may cause the disconnect switch to be bypassed if the exposed area comes into contact with a grounded surface. This may result in an unsafe condition for servicing the machine. Repair components or replace components before servicing the machine.

⚠ WARNING

Fire on a machine can result in personal injury or death. Exposed battery cables that come into contact with a grounded connection can result in fires. Replace cables and related parts that show signs of wear or damage. Contact your Cat dealer.

Wiring

Check electrical wires daily. If any of the following conditions exist, replace parts before you operate the machine.

- Fraying
- Signs of abrasion or wear
- Cracking
- Discoloration
- Cuts on insulation
- Other damage

Make sure that all clamps, guards, clips, and straps are reinstalled correctly. This will help to prevent vibration, rubbing against other parts, and excessive heat during machine operation.

Attaching electrical wiring to hoses and tubes that contain flammable fluids or combustible fluids should be avoided.

Consult your Cat dealer for repair or for replacement parts.

Keep wiring and electrical connections free of debris.

Lines, Tubes, and Hoses

Do not bend high-pressure lines. Do not strike high-pressure lines. Do not install any lines that are bent or damaged. Use the appropriate backup wrenches in order to tighten all connections to the recommended torque.

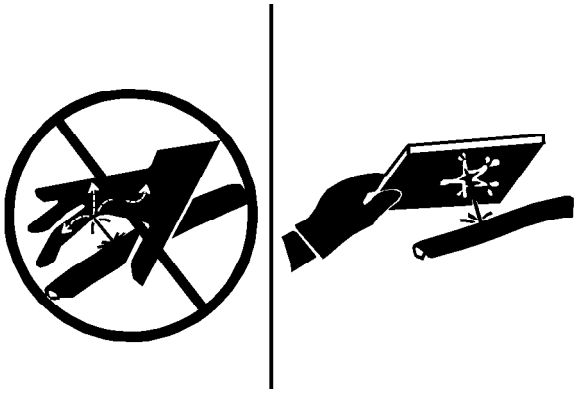

Illustration 73 g00687600

Check lines, tubes, and hoses carefully. Wear Personal Protection Equipment (PPE) in order to check for leaks. Always use a board or cardboard when you check for a leak. Leaking fluid that is under pressure can penetrate body tissue. Fluid penetration can cause serious injury and possible death. A pin hole leak can cause severe injury. If fluid is injected into your skin, you must get treatment immediately. Seek treatment from a doctor that is familiar with this type of injury.

Replace the affected parts if any of the following conditions are present:

- End fittings are damaged or leaking.
- Outer coverings are chafed or cut.
- Wires are exposed.
- Outer coverings are swelling or ballooning.
- Flexible parts of the hoses are kinked.
- Outer covers have exposed embedded armoring.
- End fittings are displaced.

Make sure that all clamps, guards, and heat shields are installed correctly. During machine operation, this will help to prevent vibration, rubbing against other parts, excessive heat, and failure of lines, tubes, and hoses.

Do not operate a machine when a fire hazard exists. Repair any lines that are corroded, loose, or damaged. Leaks may provide fuel for fires. Consult your Cat dealer for repair or for replacement parts. Use genuine Cat parts or the equivalent, for capabilities of both the pressure limit and temperature limit.

Ether

Ether (if equipped) is commonly used in cold-weather applications. Ether is flammable and poisonous.

Only use approved Ether canisters for the Ether dispensing system fitted to your machine, do not spray Ether manually into an engine, follow the correct cold engine starting procedures. Refer to the section in the Operation and Maintenance Manual with the label “Engine Starting” .

⚠ WARNING

Manually spraying Ether into an engine with a Diesel Particulate Filter (DPF) may result in the accumulation of Ether in the DPF and an explosion. This in conjunction with other factors may result in an injury or death.

Use ether in ventilated areas. Do not smoke while you are replacing an ether cylinder.

Do not store ether cylinders in living areas or in the operator compartment of a machine. Do not store ether cylinders in direct sunlight or in temperatures above 49° C (120.2° F). Keep ether cylinders away from open flames or sparks.

Dispose of used ether cylinders properly. Do not puncture an ether cylinder. Keep ether cylinders away from unauthorized personnel.

Fire Extinguisher

As an additional safety measure, keep a fire extinguisher on the machine.

Be familiar with the operation of the fire extinguisher. Inspect the fire extinguisher and service the fire extinguisher regularly. Follow the recommendations on the instruction plate.

Consider installation of an aftermarket Fire Suppression System, if the application and working conditions warrant the installation.

i07041871

Fire Safety

SMCS Code: 7000

Note: Locate secondary exits and how to use the secondary exits before you operate the machine.

Note: Locate fire extinguishers and how to use a fire extinguisher before you operate the machine.

If you find that you are involved in a machine fire, your safety and that of others on site are the top priority. The following actions should only be performed if the actions do not present a danger or risk to you and any nearby people. Assess the risk of personal injury and move away to a safe distance as soon as you feel unsafe.

Move the machine away from nearby combustible material such as fuel/oil stations, structures, trash, mulch, and timber.

Lower any implements and turn off the engine as soon as possible. If you leave the engine running, the engine will continue to feed a fire. The fire will be fed from any damaged hoses that are attached to the engine or pumps.

If possible, turn the battery disconnect switch to the OFF position. Disconnecting the battery will remove the ignition source in the event of an electrical short. Disconnecting the battery will eliminate a second ignition source if electrical wiring is damaged by the fire, resulting in a short circuit.

Notify emergency personnel of the fire and your location.

If your machine is equipped with a fire suppression system, follow the manufacturers procedure for activating the system.

Note: Fire suppression systems need to be regularly inspected by qualified personnel. You must be trained to operate the fire suppression system.

If you are unable to do anything else, shut off the machine before exiting. By shutting off the machine, fuels will not continue to be pumped into the fire.

If the fire grows out of control, be aware of the following risks:

- Tires on wheeled machines pose a risk of explosion as tires burn. Hot shrapnel and debris can be thrown great distances in an explosion.
- Tanks, accumulators, hoses, and fittings can rupture in a fire, spraying fuels and shrapnel over a large area.
- Remember that nearly all the fluids on the machine are flammable, including coolant and oils. Additionally, plastics, rubbers, fabrics, and resins in fiberglass panels are also flammable.

i07358446

Fire Suppression System

SMCS Code: 1000; 7000; 7401

Fire suppression systems are designed to detect and extinguish a machine fire to prevent the fire from spreading.

Fire suppression systems must be installed, maintained, and serviced by an authorized fire suppression system agent.

Fire suppression systems are not intended to extinguish all possible fires. Unusual amounts of combustible materials and flammable fuels present, fluids under high pressure, uncontrolled operating and environmental conditions, debris buildup, as well as extended machine operating periods with minimal machine maintenance, can result in fire conditions which exceed the extinguishing capacity of the fire suppression system.

Alternative fire fighting equipment will need to be available to supplement the system if re-ignition occurs, or when total extinguishment is not possible.

Reference: Refer to Operation Maintenance Manual, “Fire Prevention and Explosion Prevention” for information regarding the prevention of a machine fire.

Reference: Refer to Operation Maintenance Manual, “Fire Safety” for information regarding fire safety and what to do in the event of a machine fire.

Depending on the application, your machine may be equipped with one of the following fire suppression configurations:

Fire Suppression System - Ready – If equipped. connections are installed that are ready for the final installation and commissioning of a fire suppression system. Contact an authorized fire suppression system agent. Refer to REHS1666, “General Guidelines for Fire Suppression Equipment”.

Fire Suppression System - Non-commissioned – If equipped, the fire suppression system is installed, but not commissioned. The fire suppression system delivered with the machine is not completed, or commissioned by Caterpillar. Contact an authorized fire suppression system agent.

Fire Suppression System - Commissioned – If equipped, the fire suppression system is installed and commissioned. The fire suppression system delivered with the machine is functional.

Note: Refer to Operation Maintenance Manual, “Operation Section” for additional information that pertains to your machine.

i07713365

Fire Extinguisher Location

SMCS Code: 7000; 7419

Itis recommended to install a fire extinguisher on the machine. Make sure that you are familiar with the operation and usage of the fire extinguisher. Inspect the fire extinguisher and service the fire extinguisher regularly according to the fire extinguisher manufacturer recommendations.

Illustration 74 g06411852

The recommended location for mounting the fire extinguisher is inside the cab on the machine left rear cab post. Your machine may be equipped with a fire extinguisher mounting bracket located in this location. A 2.2 kg (5 lb) charge capacity fire extinguisher can be secured to this location. Ensure that the fire extinguisher is secure and that the location will not interfere with machine operation.

Note: The machine is equipped with mounting holes from the factory for installation of a fire extinguisher mounting bracket. Do not weld the ROPS or drill extra holes in the ROPS.

i01122596

Electrical Storm Injury Prevention

SMCS Code: 7000

When lightning is striking in the vicinity of the machine, the operator should never attempt the following procedures:

- Mount the machine.
- Dismount the machine.

If you are in the operator's station during an electrical storm, stay in the operator's station. If you are on the ground during an electrical storm, stay away from the vicinity of the machine.

i00771840

Before Starting Engine

SMCS Code: 1000; 7000

Start the engine only from the operator compartment. Never short across the starter terminals or across the batteries. Shorting could damage the electrical system by bypassing the engine neutral start system.

Inspect the condition of the seat belt and of the mounting hardware. Replace any parts that are worn or damaged. Regardless of appearance, replace the seat belt after three years of use. Do not use a seat belt extension on a retractable seat belt.

Adjust the seat so that full pedal travel can be achieved with the operator's back against the back of the seat.

Make sure that the machine is equipped with a lighting system that is adequate for the job conditions. Make sure that all machine lights are working properly.

Before you start the engine and before you move the machine, make sure that no one is underneath the machine, around the machine, or on the machine. Make sure that the area is free of personnel.

i08747336

Restricted Visibility

SMCS Code: 7000; 7605

The size and the configuration of this machine may result in areas that cannot be seen when the operator is seated. For restricted visibility areas, an appropriate job site organization must be utilized to minimize hazards of this restricted visibility. For more information regarding job site organization refer to Operation and Maintenance Manual, “Visibility Information”.

Illustration 75 provide an approximate visual indication of the areas at ground level inside a radius of 12 m (39 ft) from the operator with restricted visibility when machine is not equipped with available rear camera. Illustration 76 provides an approximate visual indication of the areas at ground level inside a radius of 12 m (39 ft) from the operator with restricted visibility when machine is equipped with available rear camera. All restricted visibility areas less than 300mm wide may not be shown. These illustrations do not indicate areas of restricted visibility for distances outside of the shown radius. The areas of restricted visibility shown in the illustrations are with the work tool of the machine in the Travel position. The Travel position is worktool at lowest height and fully racked back.

Illustration 75 indicates restricted visibility areas at ground level inside the shown radius from the operator with the use of standard equipment and equipped with enclosed cab.

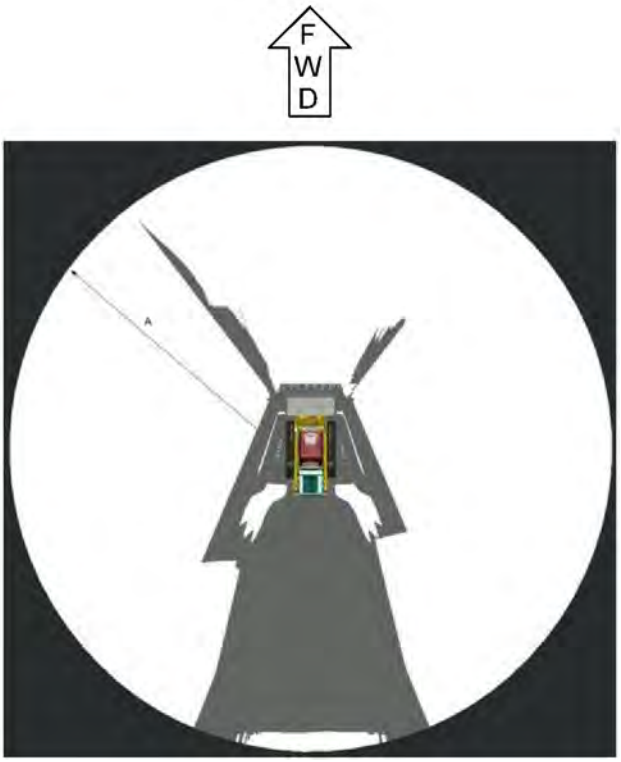

Illustration 75 g06338806

Top view of the machine, ground level visibility with rearview mirror, and equipped with enclosed cab.

(A) 12 m (39 ft)

Note: The shaded areas indicate the approximate location of areas with significant restricted visibility.

Illustration 76 indicates restricted visibility areas at ground level inside the shown radius from the operator with the use of available rear camera and equipped with enclosed cab.

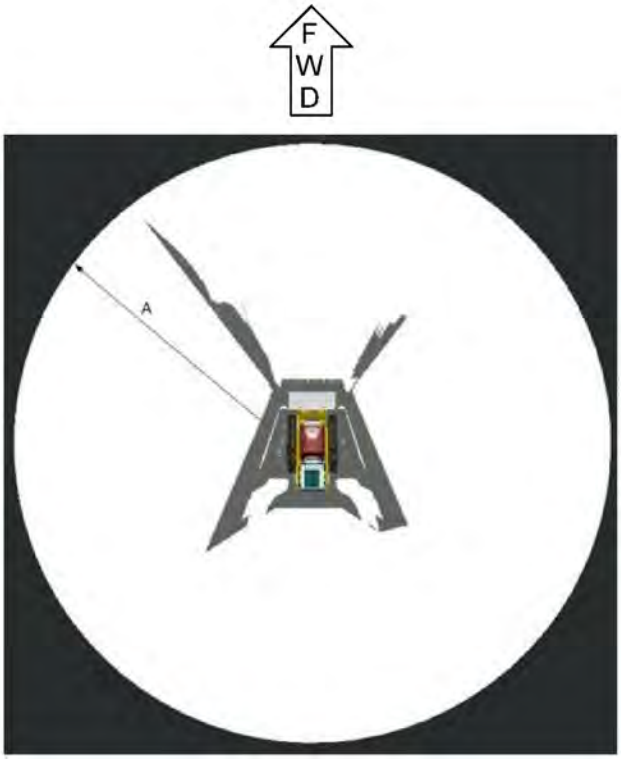

Illustration 76 g06338815

Top view of the machine, ground level visibility with rearview mirror and available rear camera, and equipped with enclosed cab.

(A) 12 m (39 ft)

Note: The shaded areas indicate the approximate location of areas with significant restricted visibility.

Illustration 77 indicates restricted visibility areas at ground level inside the shown radius from the operator with the use of available rear camera and equipped with enclosed cab.

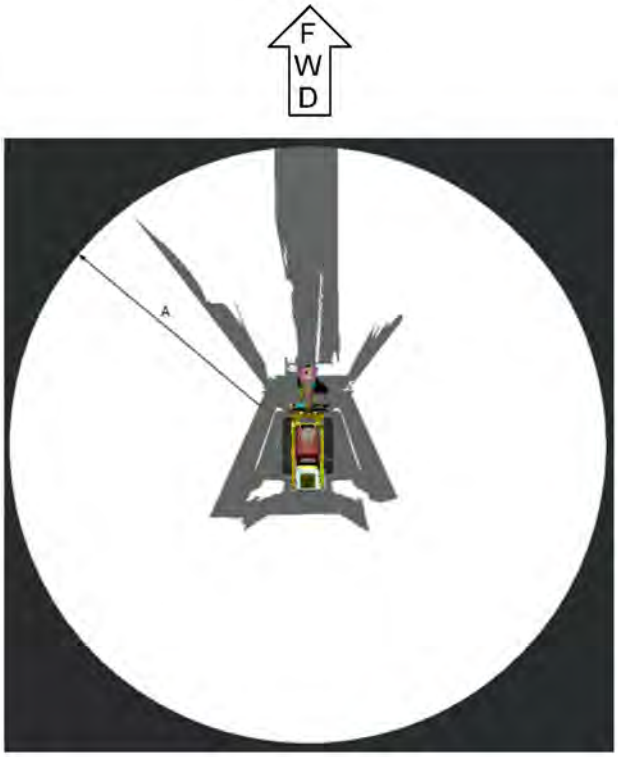

Illustration 77 g06763099

Top view of the machine, ground level visibility with SW360 wheel saw attachment with rearview mirror and available rear camera, and equipped with enclosed cab.

(A) 12 m (39 ft)

Note: The shaded areas indicate the approximate location of areas with significant restricted visibility.

Illustration 78 indicates restricted visibility areas at ground level inside the shown radius from the operator with the use of available rear and front camera and equipped with enclosed cab.

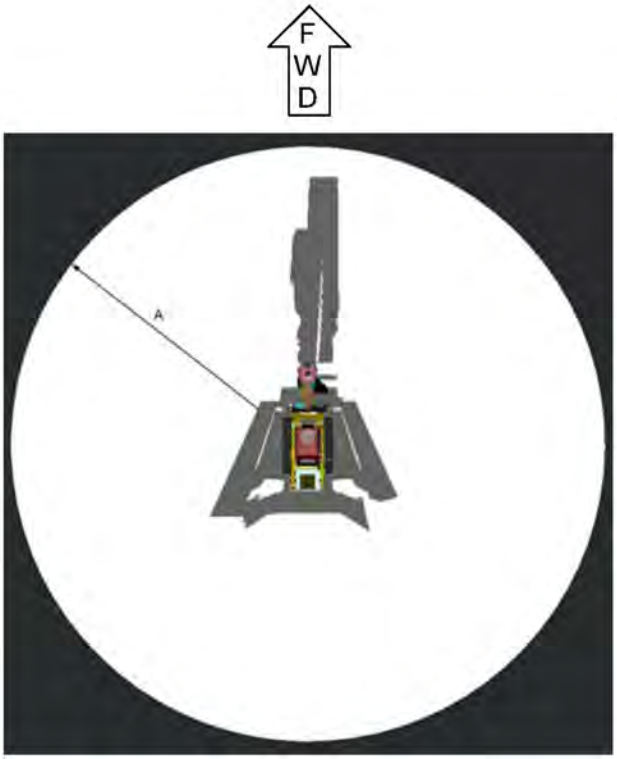

Illustration 78 g06763136

Top view of the machine, ground level visibility with SW360 wheel saw attachment with rearview mirror and available rear and front cameras, and equipped with enclosed cab.

(A) 12 m (39 ft)

i08473852

Visibility Information

SMCS Code: 7000

Before you start the machine, perform a walk-around inspection to ensure that there are no hazards around the machine.

While the machine is in operation, constantly survey the area around the machine to identify potential hazards as hazards become visible around the machine.

Your machine may be equipped with visual aids. Some examples of visual aids are Closed Circuit Television (CCTV) and mirrors. Before operating the machine, ensure that the visual aids are in proper working condition and that the visual aids are clean. Shut down the machine until damaged or nonfunctional visual aid(s) are repaired (if applicable) or until appropriate job site organization is used to minimize hazards that are caused by any resulting restricted visibility. Adjust the visual aids using the procedures that are located in this Operation and Maintenance Manual. If equipped, the Work Area Vision System shall be adjusted according to Operation and Maintenance Manual, SEBU8157, “Work Area Vision System”. If equipped, the Cat Detect Object Detection shall be adjusted according to the Operation and Maintenance Manual, “Cat Detect Object Detection” for your machine.

It may not be possible to provide direct visibility on large machines to all areas around the machine. Appropriate job site organization is required to minimize hazards that are caused by restricted visibility. Job site organization is a collection of rules and procedures that coordinates machines and people that work together in the same area. Examples of job site organization include the following:

- Safety instructions
- Controlled patterns of machine movement and vehicle movement
- Workers that direct safe movement of traffic
- Restricted areas
- Operator training
- Warning symbols or warning signs on machines or on vehicles
- A system of communication
- Communication between workers and operators prior to approaching the machine

Modifications of the machine configuration by the user that result in a restriction of visibility shall be evaluated.

i07327729

Engine Starting

SMCS Code: 1000; 7000

If a warning tag is attached to the start switch or to the controls, do not start the engine. Also, do not move any controls.

Move all hydraulic controls to the NEUTRAL position before you start the engine.

Set the engine speed control knob to the low idle position before you start the engine. See Operation Maintenance Manual, Engine Starting for specific engine starting and warm up procedures, and an explanation of several engine protection modes that may be active under certain conditions which might impact the expected or desired engine speed.

Diesel engine exhaust contains products of combustion which can be harmful to your health. Always start the engine in a well ventilated area. Always operate the engine in a well ventilated area. If you are in an enclosed area, vent the exhaust to the outside.

i02680030

Before Operation

SMCS Code: 7000

Video tapes and safety information are available in English for the machine. A list of some of the material is available in the Operation and Maintenance Manual, “Reference Material”. Consult your Caterpillar dealer in order to obtain copies of the material. The information should be reviewed by every person that operates the machine.

Clear all personnel from the machine and from the area.

Clear all obstacles from the path of the machine. Beware of hazards such as wires, ditches, etc.

Make sure that all windows are clean. Secure all doors in the closed position. Secure the windows in the open position or in the shut position.

Make sure that the machine horn, the backup alarm and all other warning devices are working properly.

Fasten the seat belt securely. Lower the armrests.

i08530076

Operation

SMCS Code: 7000

Machine Operation

Only operate the machine while you are in the seat. The seat belt must be fastened while you operate the machine. Only operate the controls while the engine is running.

Before you move the machine, make certain that no one will be endangered.

While you operate the machine and the work tool slowly in an open area, check for proper operation of all controls and all protective devices.

Do not allow riders on the machine. Never use the work tool for a work platform.

Note any needed repairs during machine operation. Report any needed repairs.

Use Caterpillar Approved Work Tools on this machine. Obey all the lift restrictions. Refer to Operation and Maintenance Manual, “Caterpillar Approved Work Tools” for the approved work tools and the lift restriction information.

Carry work tools low. Lower the lift arms fully. Tilt back the work tool to keep the work tool off the ground. Do not go close to the edge of a cliff, an excavation, or an overhang.

If the machine begins to sideslip downward on a grade, immediately remove the load and turn the machine downhill.

Avoid any conditions that can lead to tipping the machine. The machine can tip when you work on hills, on banks, and on slopes. Also, the machine can tip when you cross ditches, ridges, or other unexpected obstacles.

Avoid operating the machine across the slope. When possible, operate the machine up the slopes and down the slopes.

Maintain control of the machine. Do not overload the machine beyond the machine capacity.

Never straddle a wire cable. Never allow personnel to straddle a wire cable.

Know the maximum dimensions of your machine.

Always keep the Rollover Protective Structure (ROPS) installed during machine operation.

Observe all applicable local government regulations when you use the Skid Steer Loader, Multi-Terrain Loader, or Compact Track Loader to lift heavy objects.

Sound the horn and allow adequate time for bystanders to clear the area before moving the machine into a restricted visibility area. Follow local practices for your machine application. For more information refer to Operation and Maintenance Manual, Restricted Visibility.

Machine Operating Temperature Range

The standard machine configuration is intended for use within an ambient temperature of−32 °C (−25 °F) to 43 °C (109.4 °F). Special configurations for different ambient temperatures may be available. Consult your Cat dealer for additional information on special configurations of your machine.

Fueling Machine

⚠ WARNING

Ultra Low Sulfur Diesel (ULSD) poses a greater static ignition hazard than earlier diesel formulations, with a higher Sulfur content, which may result in a fire or explosion. Consult with your fuel or fuel system supplier for details on proper grounding and bonding practices.

⚠ WARNING

To avoid possible injury or death, do not smoke while in an area that contains flammable liquids.

All fuels, most lubricants, and some coolants are flammable.

Keep all fuels and lubricants stored in properly marked containers and away from unauthorized persons.

Fuel leaked or spilled onto hot surfaces or electrical components can cause a fire.

Store all oily rags or other flammable materials in a protective container in a safe place.

Remove all flammable materials such as fuel, oil, and other debris before they accumulate on the machine.

Do not expose the machine to flames, burning brush, etc., if at all possible.

Locate fuel fill on machine, and remove the fuel cap. When fueling the machine is complete, replace the fuel cap and lock into place.

Fuel cap may be hot. To avoid injury, use personal protective equipment. Allow the cap to cool before fueling the machine.

Limiting Conditions and Criteria

Limiting conditions are immediate issues with this machine that must be addressed prior to continuing operation.

The Operation and Maintenance Manual, Safety Section describes limiting condition criteria for replacing items such as safety messages, seat belt and mounting hardware, lines, tubes, hoses, battery cables and related parts, electrical wires, and repairing any fluid leak.

The Operation and Maintenance Manual, Maintenance Interval Schedule describes limiting condition criteria that require repair or replacement for items (if equipped) such as alarms, horns, braking system, steering system, and rollover protective structures.

The Operation and Maintenance Manual, Monitoring System (if equipped) provides information on limiting condition criteria, including a Warning Category 3 that requires immediate shutdown of the engine.

Critical Failures

The following table provides summary information on several limiting conditions found in this Operation and Maintenance Manual. The table provides criteria and required action for the limiting conditions listed. Each System or Component in this table, together with the respective limiting condition, describes a potential critical failure that must be addressed. Not addressing limiting conditions with required actions may, along with other factors or circumstances, result in a risk of personal injury or death. If an accident occurs, notify emergency personnel and provide location and description of accident.

Table 2

System or Component Name	Limiting Condition	Criteria for Action	Required Action
Line, tubes, and hoses	End fittings are damaged or leaking. Outer coverings are chafed or cut. Wires are exposed. Outer coverings are swelling or ballooning. Flexible parts of the hoses are kinked. Outer covers have exposed embedded armoring. End fittings are displaced.	Visible corrosion, loose, or damaged lines, tubes, or hoses. Visible fluid leaks.	Immediately repair any lines, tubes, or hoses that are corroded, loose, or damaged. Immediately repair any leaks as these may provide fuel for fires.
Electrical Wiring	Signs of fraying, abrasion, cracking, discoloration, cuts on the insulation	Visible damage to electrical wiring	Immediately replace damaged wiring

(continued)

(Table 2, contd)

System or Component Name	Limiting Condition	Criteria for Action	Required Action
Battery cable(s)	Signs of fraying, abrasion, cracking, discoloration, cuts on the insulation of the cable, fouling, corroded terminals, damaged terminals, and loose terminals	Visible damage to battery cable(s)	Immediately replace damaged battery cables
Operator Protective Structure	Structures that are bent, cracked, or loose. Loose, missing, or damaged bolts.	Visible damage to structure. Loose, missing, or damaged bolts.	Do not operate machine with damaged structure or loose, missing, or damaged bolts. Contact your Cat dealer for inspection and repair or replacement options.
Seat Belt	Worn or damaged seat belt or mounting hardware	Visible wear or damage	Immediately replace parts that are worn or damaged.
Seat Belt	Age of seat belt	Three years after date of installation	Replace seat belt 3 years after date of installation
Safety Messages	Appearance of safety message	Damage to safety messages making them illegible	Replace the illustrations if illegible.
Audible Warning Device(s) (if equipped)	Sound level of audible warning	Reduced or no audible warning present	Immediately repair or replace audible warning devices not working properly.
Camera(s) (if equipped)	Dirt or debris on camera lens	Dirt or debris obstructing camera view	Clean camera before operating machine.
Cab Windows (if equipped)	Dirt, debris, or damaged windows	Dirt or debris obstructing operator visibility. Any damaged windows.	Clean windows before operating machine. Repair or replace damaged windows before operating machine.
Mirrors (if equipped)	Dirt, debris, or damaged mirror	Dirt or debris obstructing operator visibility. Any damaged mirrors.	Clean mirrors before operating machine. Repair or replace damaged mirrors before operating machine.
Braking System	Inadequate braking performance	System does not pass Braking System - Test(s) included in Maintenance Section or in the Testing and Adjusting Manual	Contact your Cat dealer to inspect and, if necessary, repair the brake system.
Cooling System	The coolant temperature is too high.	Monitoring System displays Warning Category 3	Stop the engine immediately. Check the coolant level and check the radiator for debris. Refer to Operation and Maintenance Manual, Cooling System Coolant Level - Check. Check the fan drive belts for the water pump. Refer to Operation and Maintenance Manual, Belts - Inspect/Adjust/ Replace. Make any necessary repairs.
Engine Oil System	A problem has been detected with the engine oil pressure.	Monitoring System displays Warning Category 3	If the warning stays on during low idle, stop the engine and check the engine oil level. Perform any necessary repairs as soon as possible.
Engine system	An engine fault has been detected by the engine ECM.	Monitoring System displays Warning Category 3	Stop the engine immediately. Contact your Cat dealer for service.
Fuel System	A problem has been detected with the fuel system.	Monitoring System displays Warning Category 3	Stop the engine. Determine the cause of the fault and perform any necessary repairs.
Hydraulic Oil System	The hydraulic oil temperature is too high.	Monitoring System displays Warning Category 3	Stop the engine immediately. Check the hydraulic oil level and check the hydraulic oil cooler for debris. Perform any necessary repairs as soon as possible.
Steering System	A problem has been detected with the steering system. (If equipped with steering system monitoring.)	Monitoring System displays Warning Category 3	Move machine to a safe location and stop the engine immediately. Contact your Cat dealer to inspect and, if necessary, repair the steering system.
Overall Machine	Machine service is required.	Monitoring System displays Warning Category 3	Stop the engine immediately. Contact your Cat dealer for service.

i06299648

Engine Stopping

SMCS Code: 1000; 4450; 6461; 6700; 7000; 7451

Do not stop the engine immediately after the machine has been operated under load. Stopping the engine immediately can cause overheating and accelerated wear of engine components.

After the machine is parked and the parking brake is engaged, allow the engine to run at low idle for 5 minutes before shutdown. Running the engine allows hot areas of the engine to cool gradually.

i05333750

High Pressure Fuel Lines

SMCS Code: 1000; 1252; 1274; 7000

S/N: B621–Up

S/N: GJ21–Up

S/N: HX21–Up

S/N: L321–Up

S/N: ZB21–Up

S/N: EP31–Up

S/N: JX31–Up

S/N: LB31–Up

S/N: R231–Up

S/N: TP31–Up

S/N: TY31–Up

S/N: TP41–Up

S/N: TY41–Up

S/N: EK51–Up

S/N: GJ51–Up

S/N: WS51–Up

S/N: GK61–Up

S/N: KC61–Up

S/N: ME61–Up

S/N: PF61–Up

S/N: TY61–Up

S/N: EP71–Up

S/N: DX81–Up

S/N: EP81–Up

S/N: S381–Up

S/N: AN91–Up

S/N: BT91–Up

S/N: BX91–Up

S/N: CW91–Up

S/N: CY91–Up

S/N: DY91–Up

S/N: EP91–Up

S/N: GX91–Up

S/N: HC91–Up

S/N: JX91–Up

S/N: KE91–Up

S/N: RB91–Up

S/N: TE91–Up

S/N: TP91–Up

S/N: T8A1–Up

S/N: P9C1–Up

S/N: WKD1–Up

S/N: R9E1–Up

S/N: S7E1–Up

S/N: W6E1–Up

S/N: Z9E1–Up

S/N: RWK1–Up

S/N: KXL1–Up

S/N: S1L1–Up

S/N: D5R1–Up

S/N: P3R1–Up

S/N: HRS1–Up

S/N: K5S1–Up

S/N: XES1–Up

S/N: HSX1–Up

S/N: T9X1–Up

S/N: D5Z1–Up

S/N: KEZ1–Up

S/N: T7Z1–Up

S/N: T9Z1–Up

WARNING

Contact with high pressure fuel may cause fluid penetration and burn hazards. High pressure fuel spray may cause a fire hazard. Failure to follow these inspection, maintenance and service instructions may cause personal injury or death.

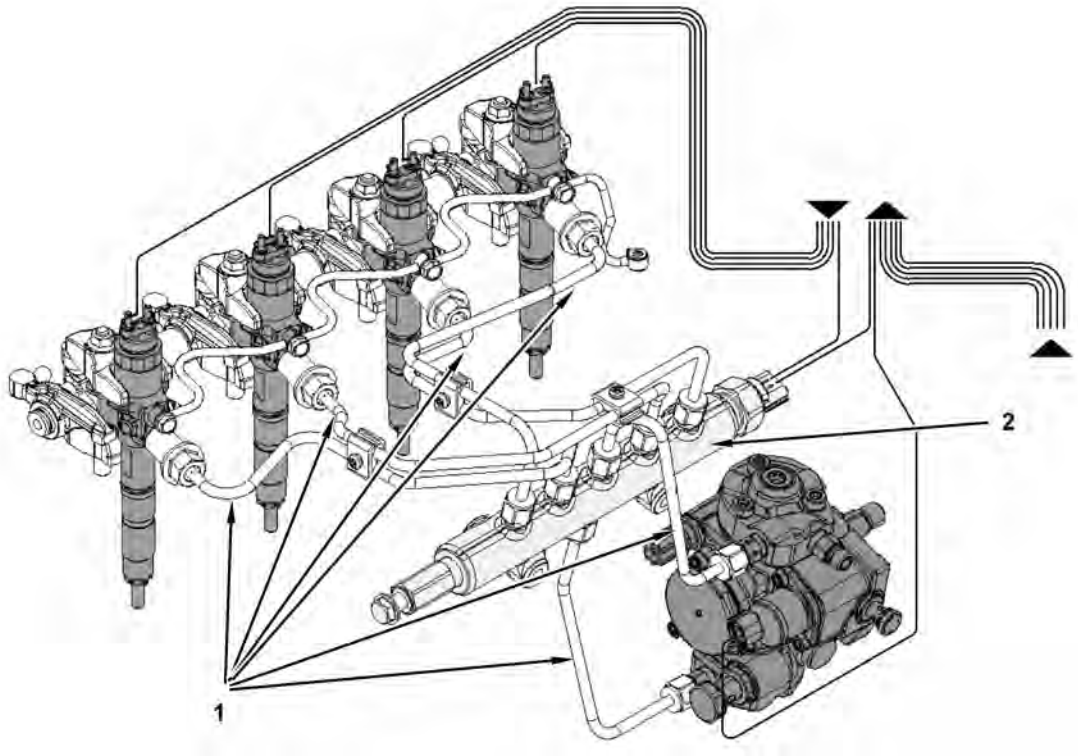

Illustration 79 g02780757

(1) High-pressure line (2) High-pressure fuel manifold (rail)

The high-pressure fuel lines are the fuel lines that are between the high-pressure fuel pump and the high-pressure fuel manifold. There are also fuel lines between the fuel manifold and cylinder head. These fuel lines are different from fuel lines on other fuel systems.

- The high-pressure fuel lines are constantly charged with high pressure.
- The internal pressures of the high-pressure fuel lines are higher than other types of fuel system.
- The high-pressure fuel lines are formed to shape and then strengthened by a special process.

Do not step on the high-pressure fuel lines. Do not deflect the high-pressure fuel lines. Do not bend or strike the high-pressure fuel lines. Deformation or damage of the high-pressure fuel lines may cause a point of weakness and potential failure.

Do not check the high-pressure fuel lines with the engine or the starting motor in operation. After the engine has stopped, allow 5 minutes to pass in order to allow the pressure to be purged. Then, any service or repair may be performed on the engine fuel lines.

Do not loosen the high-pressure fuel lines in order to remove air from the fuel system. This procedure is not required.

Visually inspect the high-pressure fuel lines before the engine is started. This inspection should be each day.

If you inspect the engine in operation, always use the proper inspection procedure in order to avoid a fluid penetration hazard. Refer to Operation and Maintenance Manual, “General hazard Information”.

- Inspect the high-pressure fuel lines for damage, deformation, a nick, a cut, a crease, or a dent.

- Do not operate the engine with a fuel leak. If there is a leak, do not tighten the connection in order to stop the leak. The connection must only be tightened to the recommended torque. Refer to Disassembly and Assembly, “Fuel injection lines - Remove and Fuel injection lines - Install”.
- If the high-pressure fuel lines are torqued correctly and the high-pressure fuel lines are leaking, the high-pressure fuel lines must be replaced.
- Ensure that all clips on the high-pressure fuel lines are in place. Do not operate the engine with clips that are damaged, missing, or loose.
- Do not attach any other item to the high-pressure fuel lines.

i05336713

Work Tools

SMCS Code: 6700

Only use work tools that are approved by Caterpillar for use on Caterpillar machines. Refer to the Operation and Maintenance Manual, “Caterpillar Approved Work Tools”.

If you are in doubt about the compatibility of a particular work tool with your machine, consult your Caterpillar dealer.

Make sure that all necessary guarding is in place on the host machine and on the work tool.

Note: A Debris Barrier Kit is required for use in applications which create airborne debris. Consult your Caterpillar dealer for information about this kit.

Use of the following equipment or operation in the following applications may create airborne debris:

- mulching head
- brush cutter
- hammers
- recycling of paper products certain agriculture applications
- cold planing

Keep all windows and doors closed on the host machine. Always wear protective glasses. Always wear the protective equipment that is recommended in the work tool operation manual. Wear any other protective equipment that is required for the operating environment.

To prevent personnel from being struck by flying objects, ensure that all personnel are out of the work area.

While you are performing any maintenance, any testing, or any adjustments to the work tool stay clear of the following areas: cutting edges, pinching surfaces and crushing surfaces.

i06158704

Demolition

SMCS Code: 6700

There may be local regulations and/or government regulations that govern the use of machines which are designed and used as demolition machinery.

Note: Obey all local and government regulations.

Demolition machinery is designed for demolishing by pushing or pulling, or fragmenting. Demolition is done by crushing or shearing, buildings and/or other civil engineering structures and component parts and/or separating the resultant debris.

If this machine is used as a demolition machine, within an area that is controlled by the European Directive 2006/42/EC the machine must be equipped with:

- Polycarbonate Front Door
- FOPS Level II
- Camera, Rear View, and Display

Note: This machine may require additional options to operate demolition tools such as a hammer or a shear within the EU. Contact your Cat dealer for additional information.

Demolition applications may generate flying debris. Ensure that there are no personnel in the area around the machine where flying debris may travel.

Demolition applications may generate airborne dust that can be hazardous to your health. If you operate the machine in a dust generating applications, use appropriate safeguarding or adequate ventilation to minimize risk.

i05336739

Parking

SMCS Code: 7000

Park on a level surface. If you must park on a grade, chock the machine.

1. Move the joystick control slowly to the NEUTRAL position in order to stop the machine.
2. Move the engine speed control knob to the LOW IDLE position.
3. Lower the loader arms and tilt the linkage so that the work tool rests firmly on the ground.

4. Move the hydraulic controls to the NEUTRAL position.
5. Turn the engine start switch key to OFF position and remove the key.
6. Raise the armrests, remove the seat belt, and exit the machine.

i07746366

Slope Operation

SMCS Code: 7000

Machines that are operating safely in various applications depend on these criteria: the machine model, configuration, machine maintenance, operating speed of the machine, conditions of the terrain, fluid levels, and tire inflation pressures. The most important criteria are the skill and judgment of the operator.

A well trained operator that follows the instructions in the Operation and Maintenance Manual has the greatest impact on stability. Operator training provides a person with the following abilities: observation of working and environmental conditions, feel for the machine, identification of potential hazards and operating the machine safely by making appropriate decisions.

When you work on side hills and when you work on slopes, consider the following important points:

Speed of travel – At higher speeds, forces of inertia tend to make the machine less stable.

Roughness of terrain or surface – The machine may be less stable with uneven terrain.

Direction of travel – Avoid operating the machine across the slope. When possible, operate the machine up the slopes and operate the machine down the slopes. Place the heaviest end of the machine uphill when you are working on an incline.

Mounted equipment – Balance of the machine may be impeded by the following components: equipment that is mounted on the machine, machine configuration, weights, and counterweights.

Nature of surface – Ground that has been newly filled with earth may collapse from the weight of the machine.

Surface material – Rocks and moisture of the surface material may drastically affect the machine's traction and machine's stability. Rocky surfaces may promote side slipping of the machine.

Slippage due to excessive loads – This may cause downhill tracks or downhill tires to dig into the ground, which will increase the angle of the machine.

Width of tracks or tires – Narrower tracks or narrower tires further increase the digging into the ground which causes the machine to be less stable.

Implements attached to the drawbar – This may decrease the weight on the uphill tracks. This may also decrease the weight on the uphill tires. The decreased weight will cause the machine to be less stable.

Height of the working load of the machine – When the working loads are in higher positions, the stability of the machine is reduced.

Operated equipment – Be aware of performance features of the equipment in operation and the effects on machine stability.

Operating techniques – Keep all attachments or pulled loads low to the ground for optimum stability.

Machine systems have limitations on slopes – Slopes can affect the proper function and operation of the various machine systems. These machine systems are needed for machine control.

Note: Operators with lots of experience and proper equipment for specific applications are also required. Safe operation on steep slopes may also require special machine maintenance. Refer to Lubricant Viscosities and Refill Capacities in this manual for the proper fluid level requirements and intended machine use. Fluids must be at the correct levels to ensure that systems will operate properly on a slope.

i08229294

Equipment Lowering with Engine Stopped

SMCS Code: 7000

Before lowering any equipment with the engine stopped, clear the area around the equipment of all personnel. The procedure to use will vary with the type of equipment to be lowered. Keep in mind most systems use a high pressure fluid or air to raise or lower equipment. The procedure will cause high pressure air, hydraulic, or some other media to be released in order to lower the equipment. Wear appropriate personal protective equipment and follow the established procedure in the Operation and Maintenance Manual, “Equipment Lowering with Engine Stopped” in the Operation Section of the manual.

i09765897

Sound Information and Vibration Information

SMCS Code: 7000

Sound Level Information

Hearing protection may be needed when the machine is operated with an open operator station, in a noisy environment, with a cab that is not properly maintained, or when the doors and windows are open for extended periods of time.

Table 3

Sound Level		Test Method
Operator Sound Pressure Level	85 dB (A)	ANSI/SAE J1166 Sept 2014 (1)

(1) The measurement was conducted at 70% of the maximum engine cooling fan speed. The sound level may vary at different engine cooling fan speeds.

The sound levels listed above include both measurement uncertainty and uncertainty due to production variation. Typical measurement uncertainty for this type of machinery is 2 dBA in accordance with “ISO 4871”.

Sound Level Information for Machines Required by the Applicable Regional Regulations

- **European Union Countries**
- **United Kingdom**
- **Eurasian Economic Union Countries**
- **Ukraine**
- **Countries that Adopt the “EU Directives”**

The information below applies to only the machine configurations that contain regional product marking on or near the Product Identification Plate noted in the “Regional Product Marking” section of this manual.

Table 4

Declared Dynamic Operator Sound Pressure Level for Machines			
Region	**Sound Level**		**Test Method**
European Union (1)	226D3, 232D3, 239D3, 249D3	83 dB(A)	“ISO 6396:2008” (2)
	236D3, 242D3, 257D3, 259D3	83 dB(A)	
	246D3 (KC6, PF6, T9X & T9Z), 262D3 (ZB2, W6E, TP3 & TP4), 279D3 (RB9 & Z9E), 289D3 (JX9 & BT9)	81 dB(A)	

(continued)

(Table 4, contd)

	246D3 (GM6, AH6, TC7 & TM7), 262D3 (BT2, MXJ, TP6 & TP7), 279D3 (TB9 & SZ9), 289D3 (LA9 & KX9)	83 dB(A)	
	272D3, 272D3 “XE” , 299D3, 299D3 “XE”	83 dB(A)	
United Kingdom	226D3, 232D3, 239D3, 249D3	83 dB(A)	“ISO 6396:2008” (2)
	236D3, 242D3, 257D3, 259D3	83 dB(A)	
	246D3 (KC6, PF6, T9X & T9Z), 262D3 (ZB2, W6E, TP3 & TP4), 279D3 (RB9 & Z9E), 289D3 (JX9 & BT9)	81 dB(A)	
	246D3 (GM6, AH6, TC7 & TM7), 262D3 (BT2, MXJ, TP6 & TP7), 279D3 (TB9 & SZ9), 289D3 (LA9 & KX9)	83 dB(A)	
	272D3, 272D3 “XE” , 299D3, 299D3 “XE”	83 dB(A)	
Eurasian Economic Union	All Machines	85 dB(A)	“ISO 6396:2008” (2)

(1) European Union Countries and in Countries that Adopt EU Directives
(2) The measurement was conducted at 70% of the maximum engine cooling fan speed. The sound level may vary at different engine cooling fan speeds. The measurement was conducted with the cab doors and the cab windows closed. The cab was properly installed and maintained.

Table 5

Declared Exterior Sound Power Level			
Region	**Sound Level**		**Test Method**
European Union (1)	226D3, 232D3, 236D3, 242D3, 246D3, 262D3	101 dB(A)	“ISO 6395:2008” (2)
	239D3, 249D3, 259D3, 279D3, 289D3	103 dB(A)	
	257D3	103 dB(A)	
	272D3, 272D3 “XE”	102 dB(A)	
	299D3, 299D3 “XE”	104 dB(A)	
	299D3, 299D3 “XE” with Steel Track Undercarriage	107 dB(A)	
United Kingdom (1)	226D3, 232D3, 236D3, 242D3, 246D3, 262D3	101 dB(A)	“ISO 6395:2008” (2)
	239D3, 249D3, 259D3, 279D3, 289D3	103 dB(A)	
	272D3, 272D3 “XE”	102 dB(A)	
	299D3, 299D3 “XE”	104 dB(A)	
	299D3, 299D3 “XE” with Steel Track Undercarriage	107 dB(A)	
Eurasian Economic Union	226D3, 232D3, 236D3, 242D3	102 dB(A)	“ISO 6395:2008” (2)
	239D3, 249D3, 257D3, 259D3	103 dB(A)	
	246D3, 262D3, 272D3, 272D3 “XE”	102 dB(A)	
	279D3, 289D3, 299D3, 299D3 “XE”	105 dB(A)	
	299D3, 299D3 XE with Steel Track Undercarriage	107 dB(A)	
Ukraine	242D3, 246D3, 262D3	104 dB(A)	“ISO 6395:2008” (2)

(1) Values are also valid for Tier 4 Final and Stage V Machines.
(2) The measurement was conducted at 70% of the maximum engine cooling fan speed. The sound level may vary at different engine cooling fan speeds. The measurement was conducted with the cab doors and the cab windows closed. The cab was properly installed and maintained.

The sound levels listed above include both measurement uncertainty and uncertainty due to production variation. Typical measurement uncertainty for this type of machinery is 2 dBA in accordance with “ISO 4871”.

The machine sound power level meets the criteria that are specified in the applicable regional regulation. For example:

- “European Directive 2000/14 EC” amended by “2005/88/EC”
- “United Kingdom 2001 No. 1701” amended by “2005 No. 3525”
- “Ukraine Technical Regulation of the Noise Emission in the Environment by Equipment for Use Outdoors”

The criteria are specified on the certificate of the conformance and the accompanying labels.

Vibration Information Applicable to Regional Regulations

- “**European Union Directive: 2002/44/EC - Physical Agents (Vibration)** ”
- “**United Kingdom: 2005 No. 1093 - The Control of Vibration at Work Regulation 2005** ”

Vibration Data for the Loaders

Information concerning hand/arm vibration level

When the machine is operated according to the intended use, the hand/arm vibration of this machine is below 2.5 m/s2.

Information concerning whole body vibration level

This section provides vibration data and a method for estimating the vibration level for skid steer loaders.

Note: Vibration levels are influenced by many different parameters. Many items are listed below.

- Operator training, behavior, mode, and stress
- Job site organization, preparation, environment, weather, and material
- Machine type, quality of the seat, quality of the suspension system, attachments, and condition of the equipment

It is not possible to get precise vibration levels for this machine. The expected vibration levels can be estimated with the information in Table7 to calculate the daily vibration exposure. A simple evaluation of the machine application can be used.

Estimate the vibration levels for the three vibration directions. For typical operating conditions, use the average vibration levels as the estimated level. With an experienced operator and smooth terrain, subtract the Scenario Factors from the average vibration level to obtain the estimated vibration level. For aggressive operations and severe terrain, add the Scenario Factors to the average vibration level to obtain the estimated vibration level.

Note: All vibration levels are in meter per second squared.

Table 6

"ISO 5349-1:2001 Hand Transmitted Vibration"									
Machine Type	Operating Cycle (SAEJ1166:2014)	Left Hand/Arm				Right Hand/Arm			
		Fore/Aft (X Axis)	Side/Side (Y Axis)	Vertical (Z Axis)	Total Vibration	Fore/Aft (X Axis)	Side/Side (Y Axis)	Vertical (Z Axis)	Total Vibration
226D3, 232D3	"Wheel Loader"	0.6	0.7	0.6	1.1	0.5	0.9	0.6	1.1
236D3, 242D3	"Wheel Loader"	0.8	1.4	0.7	1.7	0.6	1.1	0.7	1.4
246D3, 262D3	"Wheel Loader"	0.8	1.0	0.8	1.5	1.1	0.9	1.3	1.9
272D3, 272D3 "XE"	"Wheel Loader"	0.4	0.5	0.4	0.7	0.4	0.6	0.4	0.8
257D3	"Crawler Loader"	0.8	1.3	1.0	1.8	0.8	1.5	1.1	2.1
239D3, 249D3	"Crawler Loader"	0.7	1.2	1.0	1.7	0.8	1.2	1.2	1.9
259D3	"Crawler Loader"	0.7	1.0	0.8	1.4	0.7	1.0	0.7	1.4
279D3, 289D3	"Crawler Loader"	0.9	1.9	1.4	2.5	0.7	1.5	1.2	2.1
299D3, 299D3 XE	"Crawler Loader"	0.7	1.1	0.9	1.6	0.6	1.6	0.9	1.9
299D3, 299D3 XE with Steel Track	"Crawler Loader"	1.0	1.9	1.8	2.8	1.0	1.7	1.8	2.7

Table 7

"ISO 2631-1:1997 Whole Body Vibration"					
Machine Type	Operating Cycle (SAEJ1166:2014)	Whole Body			
		Fore/Aft (X Axis)	Side/Side (Y Axis)	Vertical (Z Axis)	Total Vibration
226D3, 232D3	"Wheel Loader"	0.7	0.4	0.5	n/a
236D3, 242D3	"Wheel Loader"	0.7	0.4	0.4	n/a
246D3, 262D3	"Wheel Loader"	0.7	0.4	0.8	n/a
272D3, 272D3 XE	"Wheel Loader"	0.5	0.3	0.3	n/a
257D3	"Crawler Loader"	0.7	0.4	0.6	n/a
239D3, 249D3	"Crawler Loader"	0.6	0.5	0.3	n/a
259D3	"Crawler Loader"	0.5	0.3	0.3	n/a
279D3, 289D3	"Crawler Loader"	0.5	0.2	0.8	n/a
299D3, 299D3 XE	"Crawler Loader"	0.6	0.4	0.4	n/a
299D3, 299D3 XE with Steel Track	"Crawler Loader"	0.5	0.3	0.6	n/a

Note: Refer to “ISO/TR 25398 Mechanical Vibration - Guideline for the assessment of exposure to whole body vibration of ride on operated earthmoving machines” for more information about vibration. This publication uses data that is measured by international institutes, organizations, and manufacturers. This document provides information about the whole body exposure of operators of earthmoving equipment. Refer to Operation and Maintenance Manual, SEBU8257, “The European Union Physical Agents (Vibration) Directive 2002/44/EC” for more information about machine vibration levels. EAEU typical measurement uncertainty for this type of machinery is 1.25 m/s2 in accordance with “EN 12096”.

The Caterpillar suspension seat meets the criteria of “ISO 7096”. This represents vertical vibration level under severe operating conditions. This seat is tested with the input “spectral class EM9”. The seat has a transmissibility factor of “SEAT<0.9”.

The whole body vibration level of the machine varies. There is a range of values. The low value is 0.5 m/s2. The machine meets the short-term level for the design of the seat in “ISO 7096”. The value is 1.59 m/s2 for this machine.

Guidelines for Reducing Vibration Levels on Earthmoving Equipment

Properly adjust machines. Properly maintain machines. Operate machines smoothly. Maintain the conditions of the terrain. The following guidelines can help reduce the whole body vibration level:

1. Use the right type and size of machine, equipment, and attachments.

2. Maintain machines according to the manufacturer's recommendations.

a. Tire pressures

b. Brake and steering systems

c. Controls, hydraulic system, and linkages

3. Keep the terrain in good condition.

a. Remove any large rocks or obstacles.

b. Fill any ditches and holes.

c. Provide machines and schedule time to maintain the conditions of the terrain.

4. Use a seat that meets “ISO 7096”. Keep the seat maintained and adjusted.

a. Adjust the seat and suspension for the weight and the size of the operator.

b. Inspect and maintain the seat suspension and adjustment mechanisms.

5. Perform the following operations smoothly.

a. Steer

b. Brake

c. Accelerate.

d. Shift the gears.

6. Move the attachments smoothly.

7. Adjust the machine speed and the route to minimize the vibration level.

a. Drive around obstacles and rough terrain.

b. Slow down when it is necessary to go over rough terrain.

8. Minimize vibrations for a long work cycle or a long travel distance.

a. Use machines that are equipped with suspension systems.

b. Use the ride control system on skid steer loaders.

c. If no ride control system is available, reduce speed to prevent bounce.

d. Haul the machines between workplaces.

9. Less operator comfort may be caused by other risk factors. The following guidelines can be effective to provide better operator comfort:

a. Adjust the seat and adjust the controls to achieve good posture.

b. Adjust the mirrors to minimize twisted posture.

c. Provide breaks to reduce long periods of sitting.

d. Avoid jumping from the cab.

e. Minimize repeated handling of loads and lifting of loads.

f. Minimize any shocks and impacts during sports and leisure activities.

Sources

The vibration information and calculation procedure are based on “ISO/TR 25398 Mechanical Vibration - Guideline for the assessment of exposure to whole body vibration of ride on operated earthmoving machines”. harmonized data is measured by international institutes, organizations, and manufacturers.

This literature provides information about assessing the whole body vibration exposure of operators of earthmoving equipment. The method is based on measured vibration emission under real working conditions for all machines.

Check the original directive. This document summarizes part of the content of the applicable law. This document is not meant to substitute the original sources. Other parts of these documents are based on information from the United Kingdom Health and Safety Executive.

Refer to Operation and Maintenance Manual, SEBU8257, “The European Union Physical Agents (Vibration) Directive 2002/44/EC” for more information about vibration.

Consult your local Caterpillar dealer for more information about machine features that minimize vibration levels. Consult your local Caterpillar dealer about safe machine operation.

Use the web site to find your local dealer.

Caterpillar, Inc.
www.cat.com

i05753797

Guards
(Operator Protection)

SMCS Code: 7150-MCH; 7325

There are different types of guards that are used to protect the operator. The machine and the machine application, determines the type of guard that should be used.

A daily inspection of the guards is required in order to check for structures that are bent, cracked, or loose. Never operate a machine with a damaged structure.

The operator becomes exposed to a hazardous situation if the machine is used improperly or if poor operating techniques are used. This situation can occur even though a machine is equipped with an appropriate protective guard. Follow the established operating procedures that are recommended for your machine.

Roll over Protective Structure (ROPS), Falling Object Protective Structure (FOPS) or Tip Over Protection Structure (TOPS)

The ROPS/FOPS Structure (if equipped) on your machine is specifically designed, tested, and certified for that machine. Any alteration or any modification to the ROPS/FOPS Structure could weaken the structure. This action places the operator into an unprotected environment. Modifications or attachments that cause the machine to exceed the weight that is stamped on the certification plate also place the operator into an unprotected environment. Excessive weight may inhibit the brake performance, the steering performance, and the ROPS. The protection that is offered by the ROPS/FOPS Structure will be impaired if the ROPS/FOPS Structure has structural damage. Damage to the structure can be caused by an overturn, a falling object, a collision, .

Do not mount items (fire extinguishers, first aid kits, work lights). By welding brackets to the ROPS/FOPS Structure or by drilling holes in the ROPS/FOPS Structure. Welding brackets or drilling holes in the ROPS/FOPS Structures can weaken the structures. Consult your Caterpillar dealer for mounting guidelines.

The Tip Over Protection Structure (TOPS) is another type of guard that is used on mini hydraulic excavators. This structure protects the operator in the event of a tipover. The same guidelines for the inspection, the maintenance, and the modification of the ROPS/FOPS Structure are required for the Tip Over Protection Structure.

Other Guards (If Equipped)

Protection from flying objects and/or falling objects is required for special applications. Logging applications and demolition applications are two examples that require special protection.

A front guard needs to be installed when a work tool that creates flying objects is used. Mesh front guards that are approved by Caterpillar or polycarbonate front guards that are approved by Caterpillar are available for machines with a cab or an open canopy. On machines that are equipped with cabs, the windows should also be closed. Safety glasses are recommended when flying hazards exist for machines with cabs and machines with open canopies.

If the work material extends above the cab, top guards and front guards should be used. Typical examples of this type of application are listed below:

- Demolition applications
- Rock quarries

- Forestry products

Additional guards may be required for specific applications or work tools. The Operation and Maintenance Manual for your machine or your work tool will provide specific requirements for the guards. Refer to Operation Maintenance manual, “Demolition” for additional information. Consult your Caterpillar dealer for additional information.

Product Information Section

General Information

i08539162

Model View Illustrations

SMCS Code: 1000; 1926; 4450; 4469; 4480; 4490; 4491; 6282; 6700; 7000; 7007; 7451; 7606

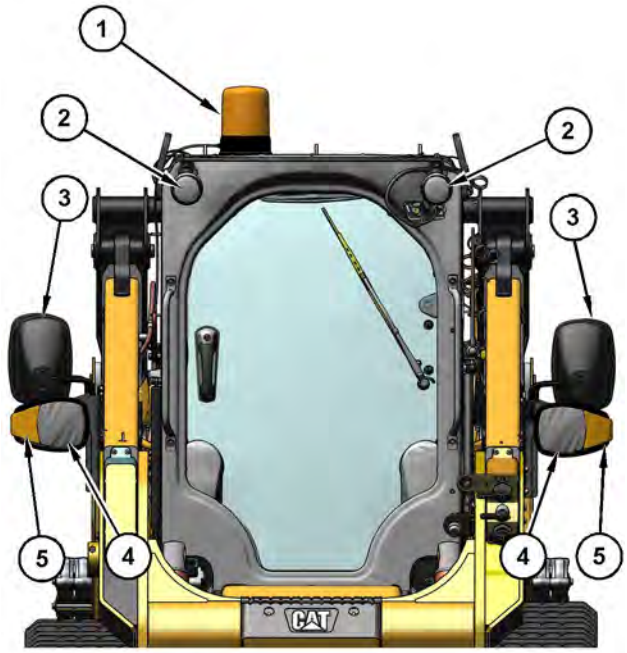

Illustration 80 g06386519

Rotating Beacon (1), Front Work Lights (2), Side View Mirrors (3), Front Running Lights (4) and Turn Signals (5)

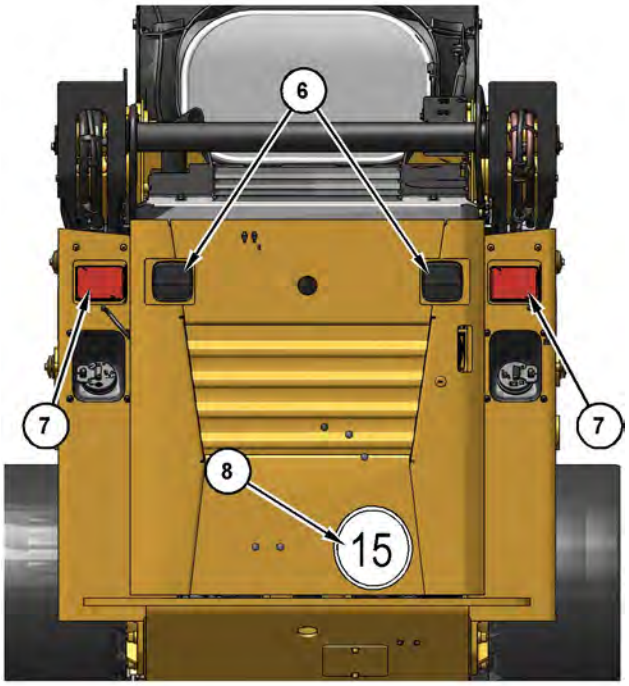

Illustration 81 g06705959

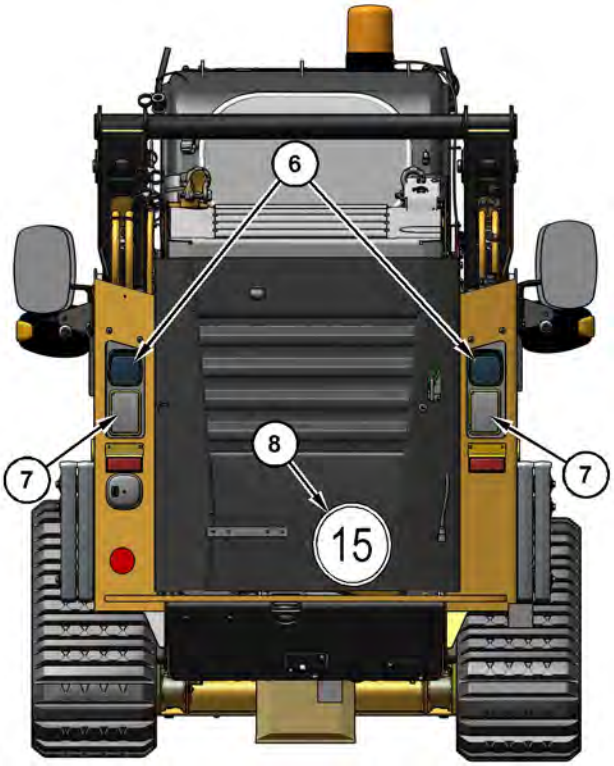

Illustration 82 g06705981

Rear Work Lights (6)

Rear Turn Signals, Position Lights, Stop Lights(7) and Speed Decal (8)

Japanese Market Only

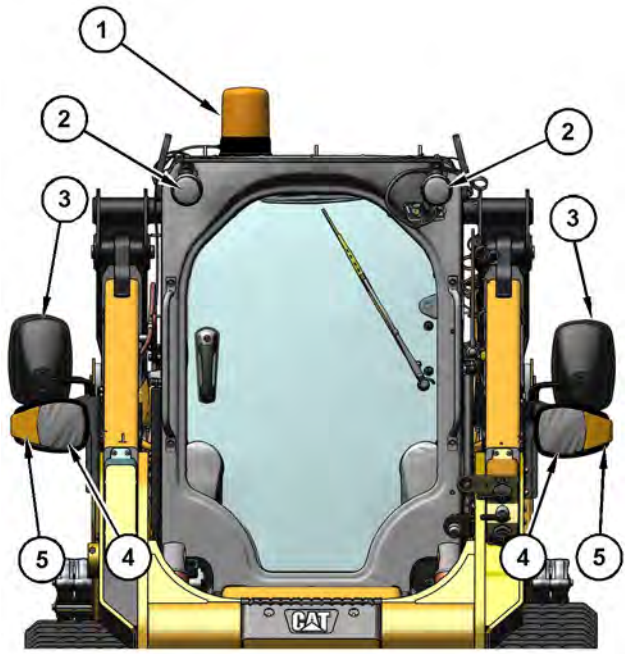

Illustration 83 g06386519

(1) Rotating Beacon
(2) Front Work Lights
(3) Side View Mirrors
(4) Low and High Beam Driving Lights
(5) Turn Signals

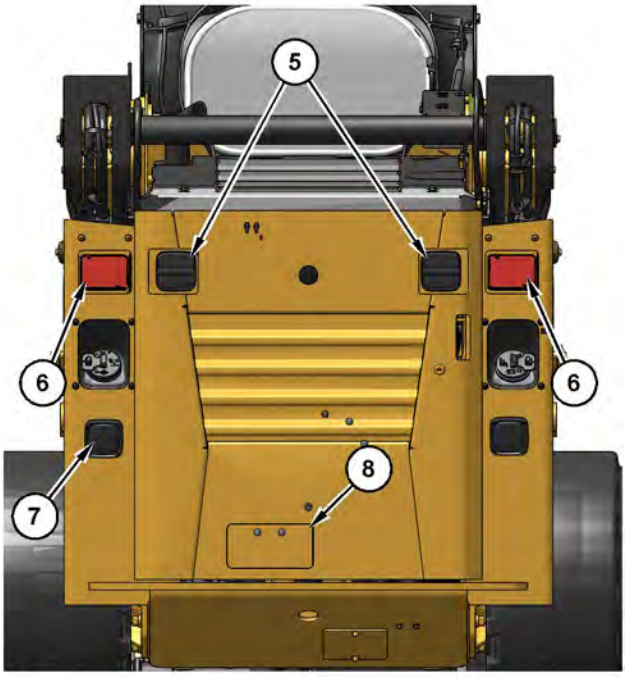

Illustration 84 g06406365

(5) Rear Work Lights
(6) Rear Turn Signals, Position Lights
(7) Reverse Light
(8) License Plate Holder and Lamp

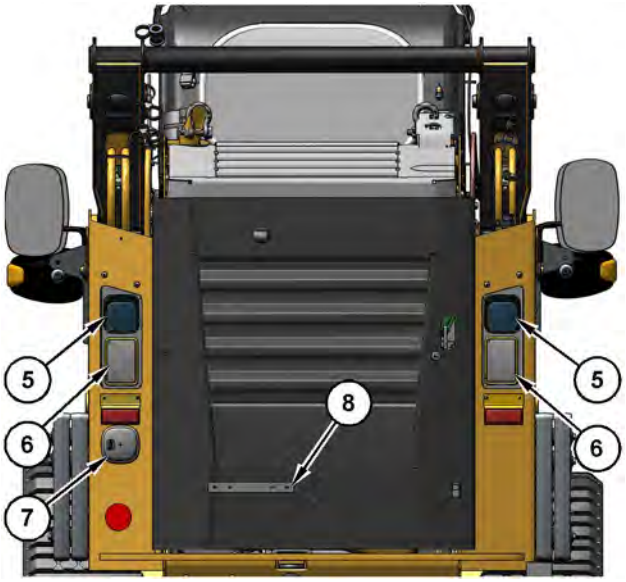

Illustration 85 g06406375

(5) Rear Work Lights
(6) Rear Turn Signals, Position Lights
(7) Reverse Light
(8) License Plate Holder and Lamp

i09761387

Rated Load

SMCS Code: 6001; 6136; 6542; 7000

Bucket Rated Load

WARNING

Failure to comply to the rated load can cause possible personal injury or property damage. This includes the risk of unintended boom lowering. Review the rated load of a particular work tool before performing any operation. Make adjustments to the rated load as necessary for non-standard configurations.

Note: Rated loads should be used as a guide. Attachments, uneven ground conditions, soft ground conditions, or poor ground conditions have effects on rated loads. The operator is responsible for being aware of these effects.

WARNING

Machine stability is affected by many factors, including the type of work tool and the position of a work tool.

Machine stability and machine control can be significantly affected if a work tool is not installed. Operating a machine without a work tool can lead to loss of control or tipping of the machine which could result in serious injury or death.

When you operate a machine without a work tool, avoid the following conditions:

- **excessive speed**
- **sharp turns**
- **abrupt implement movement**
- **slopes and uneven ground**

Rated loads are based on a standard machine with the following conditions:

- lubricants
- full fuel tank
- Cat bucket
- 75 kg (165 lb) operator
- 10 x 16.5 tires on 226D3, 232D3 machines.
- 12 x 16.5 tires on 236D3, 242D3, 246D3, 262D3, and 272D3 machines.
- 14 x 17.5 tires on 272D3 XE machines.
- Undercarriage with 320 mm (12.6 inch) wide tracks and dual flange front/single flange rear idlers on 239D3, 249D3, and 259D3 machines.
- Undercarriages with either 400 mm (15.75 inch) or 450 mm (17.72 inch) wide tracks and triple flange front/rear idlers on 279D3, and 289D3 machines.
- Undercarriages with 450 mm (17.72 inch) wide tracks and dual flange front/single flange rear idlers on 299D3 machines.
- Undercarriages with 400 mm (15.75 inch) wide tracks and triple flange front/rear idlers on 299D3 XE machines.

Note: All Caterpillar Premium Conventional tires are at the suggested operating inflation pressure. Refer to the Operation and Maintenance Manual, “Tire Inflation - Check” for the proper tire inflation pressure.

Rated loads will vary with different attachments. Consult your Cat dealer regarding the rated load for specific attachments.

Note: The Steel Track Undercarriage attachment will increase the rated operating loads inch the following tables by 103 kg (227 lb) for 299D3 and 299D3 XE machines.

The rated operating capacity (ROC) is defined by “SAE J818:2007”, “ISO 14397-1:2007” and “EN 474-3:2006 + A1:2009” as the least amount of weight of the following conditions:

- 50% of the full static tipping load for wheeled machines
- 35% of the full static tipping load for track machines
- The lifting capacity to maximum height

The corresponding dump clearance is given for each bucket at maximum lift height and at a 40 degree dump angle. The reach is given for each bucket at maximum lift height and at a 40 degree dump angle. Clearance is measured from the ground to the bucket edge to dump the load. The reach is measured from the front tire to the bucket edge.

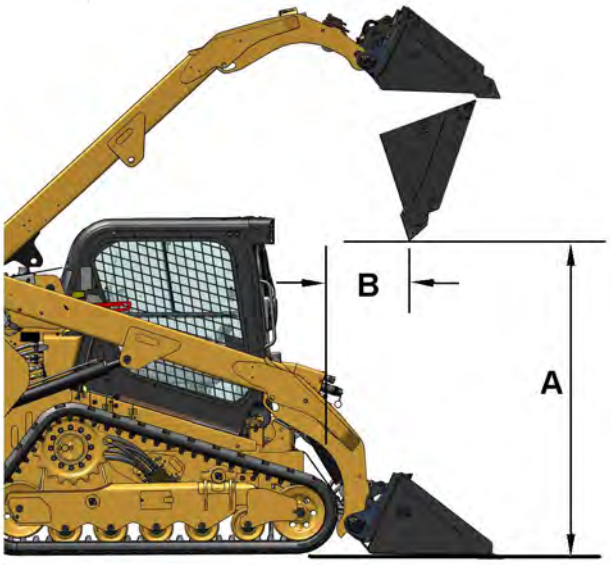

Illustration 86 g06409434

A – Dump Clearance at 40° Dump Angle

B – Reach at 40° Dump Angle

D – Bucket Width

E – Tipping Load

F – Rated Operating Capacity (ROC)

G – Work Tool Part Number

H – Work Tool Mass

	D	54 in		62 in		68 in		74 in		80 in	
	G	279-5434		279-5437		279-5440		285-6089		268-4084	
	H	154 kg	340 lb	170 kg	375 lb	194 kg	428 lb	207 kg	456 lb	212 kg	467 lb
226D3	E	1438 kg	3171 lb	1417 kg	3124 lb	1394 kg	3074 lb	1382 kg	3047 lb	1370 kg	3021 lb
	F	719 kg	1585 lb	709 kg	1562 lb	697 kg	1537 lb	691 kg	1524 lb	685 kg	1510 lb
	A	2133 mm	84 in	2132 mm	84 in	2131 mm	84 in	2131 mm	84 in	2130 mm	84 in
	B	615 mm	24 in	616 mm	24 in	618 mm	24 in	619 mm	24 in	620 mm	24 in
232D3	E	1725 kg	3804 lb	1703 kg	3755 lb	1680 kg	3704 lb	1668 kg	3678 lb	1657 kg	3654 lb
	F	863 kg	1902 lb	852 kg	1878 lb	840 kg	1852 lb	834 kg	1839 lb	829 kg	1827 lb
	A	2313 mm	91 in	2312 mm	91 in	2311 mm	91 in	2310 mm	91 in	2310 mm	91 in
	B	746 mm	29 in	748 mm	29 in	750 mm	30 in	751 mm	30 in	752 mm	30 in
236D3	E	1697 kg	3742 lb	1675 kg	3693 lb	1652 kg	3643 lb	1640 kg	3616 lb	1628 kg	3590 lb
	F	849 kg	1871 lb	838 kg	1847 lb	826 kg	1821 lb	820 kg	1808 lb	814 kg	1795 lb
	A	2428 mm	96 in	2427 mm	96 in	2427 mm	96 in	2426 mm	96 in	2426 mm	96 in
	B	446 mm	18 in	447 mm	18 in	447 mm	18 in	450 mm	18 in	450 mm	18 in
242D3	E	2029 kg	4474 lb	2007 kg	4425 lb	1984 kg	4375 lb	1972 kg	4348 lb	1961 kg	4324 lb
	F	1015 kg	2237 lb	1004 kg	2213 lb	992 kg	2187 lb	986 kg	2174 lb	981 kg	2162 lb
	A	2384 mm	94 in	2383 mm	94 in	2382 mm	94 in	2382 mm	94 in	2381 mm	94 in
	B	667 mm	26 in	668 mm	26 in	670 mm	26 in	670 mm	26 in	671 mm	26 in
246D3	E	2046 kg	4511 lb	2025 kg	4465 lb	2002 kg	4414 lb	1989 kg	4386 lb	1978 kg	4361 lb
	F	1023 kg	2256 lb	1013 kg	2233 lb	1001 kg	2207 lb	995 kg	2193 lb	989 kg	2181 lb
	A	2452 mm	97 in	2452 mm	97 in	2451 mm	96 in	2451 mm	96 in	2450 mm	96 in
	B	542 mm	21 in	543 mm	21 in	544 mm	21 in	545 mm	21 in	545 mm	21 in
262D3	E	2628 kg	5795 lb	2606 kg	5746 lb	2583 kg	5696 lb	2571 kg	5669 lb	2560 kg	5645 lb
	F	1314 kg	2897 lb	1303 kg	2873 lb	1292 kg	2848 lb	1286 kg	2835 lb	1280 kg	2822 lb
	A	2473 mm	97 in	2473 mm	97 in	2472 mm	97 in	2471 mm	97 in	2471 mm	97 in
	B	887 mm	35 in	888 mm	35 in	890 mm	35 in	890 mm	35 in	891 mm	35 in
272D3	E	3181 kg	7014 lb	3158 kg	6963 lb	3135 kg	6913 lb	3123 kg	6886 lb	3112 kg	6862 lb
	F	1591 kg	3507 lb	1579 kg	3482 lb	1568 kg	3456 lb	1562 kg	3443 lb	1556 kg	3431 lb
	A	2527 mm	99 in	2527 mm	99 in	2526 mm	99 in	2525 mm	99 in	2525 mm	99 in
	B	914 mm	36 in	915 mm	36 in	917 mm	36 in	917 mm	36 in	918 mm	36 in
272D3 XE	E	3402 kg	7501 lb	3378 kg	7448 lb	3355 kg	7398 lb	3343 kg	7371 lb	3332 kg	7347 lb
	F	1701 kg	3751 lb	1689 kg	3724 lb	1678 kg	3699 lb	1672 kg	3686 lb	1666 kg	3674 lb
	A	2565 mm	101 in	2564 mm	101 in	2564 mm	101 in	2563 mm	101 in	2563 mm	101 in
	B	882 mm	35 in	883 mm	35 in	884 mm	35 in	884 mm	35 in	885 mm	35 in

Illustration 87 g06458072

LOW PROFILE BUCKETS - WHEELED MODELS

	D	62 in		68 in		74 in		80 in	
	G	279-5437		279-5440		285-6089		268-4084	
	H	170 kg	375 lb	194 kg	428 lb	207 kg	456 lb	212 kg	467 lb
239D3	E	2004 kg	4419 lb	1982 kg	4370 lb	1970 kg	4344 lb	1959 kg	4320 lb
	F	701 kg	1547 lb	694 kg	1530 lb	690 kg	1520 lb	686 kg	1512 lb
	A	2131 mm	84 in	2131 mm	84 in	2131 mm	84 in	2131 mm	84 in
	B	716 mm	28 in	716 mm	28 in	716 mm	28 in	716 mm	28 in
249D3	E	2273 kg	5012 lb	2250 kg	4961 lb	2238 kg	4935 lb	2228 kg	4913 lb
	F	796 kg	1754 lb	788 kg	1736 lb	783 kg	1727 lb	780 kg	1719 lb
	A	2306 mm	91 in	2306 mm	91 in	2306 mm	91 in	2306 mm	91 in
	B	858 mm	34 in	858 mm	34 in	858 mm	34 in	858 mm	34 in
257D3	E			2329 kg	5135 lb	2317 kg	5109 lb	2306 kg	5085 lb
	F			815 kg	1797 lb	811 kg	1788 lb	807 kg	1780 lb
	A			2396 mm	94 in	2396 mm	94 in	2396 mm	94 in
	B			796 mm	31 in	796 mm	31 in	796 mm	31 in
259D3	E			2566 kg	5658 lb	2554 kg	5632 lb	2543 kg	5607 lb
	F			898 kg	1980 lb	894 kg	1971 lb	890 kg	1963 lb
	A			2379 mm	94 in	2379 mm	94 in	2379 mm	94 in
	B			767 mm	30 in	767 mm	30 in	767 mm	30 in
279D3	E			2901 kg	6397 lb	2889 kg	6370 lb	2878 kg	6346 lb
	F			1015 kg	2239 lb	1011 kg	2230 lb	1007 kg	2221 lb
	A			2472 mm	97 in	2472 mm	97 in	2472 mm	97 in
	B			556 mm	22 in	556 mm	22 in	556 mm	22 in
289D3	E			3768 kg	8308 lb	3756 kg	8282 lb	3746 kg	8260 lb
	F			1319 kg	2908 lb	1315 kg	2899 lb	1311 kg	2891 lb
	A			2477 mm	98 in	2477 mm	98 in	2477 mm	98 in
	B			906 mm	36 in	906 mm	36 in	906 mm	36 in

Illustration 88 g06458115

LOW PROFILE BUCKETS - TRACKED MODELS

	D	68 in		74 in		80 in	
	G	279-5440		285-6089		268-4084	
	H	194 kg	428 lb	207 kg	456 lb	212 kg	467 lb
299D3 (DY9 & P3R)	E	4530 kg	9989 lb	4519 kg	9964 lb	4509 kg	9942 lb
	F	1586 kg	3496 lb	1582 kg	3488 lb	1578 kg	3480 lb
	A	2535 mm	100 in	2535 mm	100 in	2535 mm	100 in
	B	982 mm	39 in	982 mm	39 in	982 mm	39 in
299D3 XE (BX9 & B62)	E	4642 kg	10236 lb	4630 kg	10209 lb	4620 kg	10187 lb
	F	1625 kg	3582 lb	1621 kg	3573 lb	1617 kg	3565 lb
	A	2535 mm	100 in	2535 mm	100 in	2535 mm	100 in
	B	982 mm	39 in	982 mm	39 in	982 mm	39 in
299D3 (CY9 & JX3)	E	6067 kg	13378 lb	6056 kg	13353 lb	6046 kg	13331 lb
	F	2123 kg	4682 lb	2120 kg	4674 lb	2116 kg	4666 lb
	A	2535 mm	100 in	2535 mm	100 in	2535 mm	100 in
	B	982 mm	39 in	982 mm	39 in	982 mm	39 in
299D3 XE (AN9 & GX9)	E	6174 kg	13614 lb	6164 kg	13592 lb	6154 kg	13570 lb
	F	2161 kg	4765 lb	2157 kg	4757 lb	2154 kg	4749 lb
	A	2535 mm	100 in	2535 mm	100 in	2535 mm	100 in
	B	982 mm	39 in	982 mm	39 in	982 mm	39 in
299D3 XE (LB3 & S38)	E	5659 kg	12478 lb	5648 kg	12454 lb	5638 kg	12432 lb
	F	1981 kg	4367 lb	1977 kg	4359 lb	1973 kg	4351 lb
	A	2535 mm	100 in	2535 mm	100 in	2535 mm	100 in
	B	982 mm	39 in	982 mm	39 in	982 mm	39 in
299D3 XE (XES & R23)	E	5945 kg	13109 lb	5943 kg	13104 lb	5924 kg	13062 lb
	F	2081 kg	4588 lb	2080 kg	4587 lb	2073 kg	4572 lb
	A	2535 mm	100 in	2535 mm	100 in	2535 mm	100 in
	B	982 mm	39 in	982 mm	39 in	982 mm	39 in

Illustration 89 g06593806

LOW PROFILE BUCKETS - TRACKED MODELS (CONT.)

	D	62 in		68 in		74 in		80 in		86 in	
	G	279-5364		279-5368		279-5372		279-5376		292-9270	
	H	173 kg	381 lb	221 kg	487 lb	234 kg	516 lb	247 kg	545 lb	279 kg	615 lb
226D3	E	1382 kg	3047 lb	1331 kg	2935 lb	1318 kg	2906 lb	1305 kg	2878 lb	1243 kg	2741 lb
	F	691 kg	1524 lb	666 kg	1467 lb	659 kg	1453 lb	653 kg	1439 lb	622 kg	1370 lb
	A	2096 mm	83 in	2094 mm	82 in	2094 mm	82 in	2093 mm	82 in	2030 mm	80 in
	B	655 mm	26 in	659 mm	26 in	659 mm	26 in	661 mm	26 in	735 mm	29 in
232D3	E	1662 kg	3665 lb	1611 kg	3552 lb	1598 kg	3524 lb	1585 kg	3495 lb	1518 kg	3347 lb
	F	831 kg	1832 lb	806 kg	1776 lb	799 kg	1762 lb	793 kg	1747 lb	759 kg	1674 lb
	A	2276 mm	90 in	2274 mm	90 in	2273 mm	89 in	2273 mm	89 in	2209 mm	87 in
	B	786 mm	31 in	791 mm	31 in	792 mm	31 in	793 mm	31 in	868 mm	34 in
236D3	E	1635 kg	3605 lb	1584 kg	3493 lb	1571 kg	3464 lb	1557 kg	3433 lb	1492 kg	3290 lb
	F	818 kg	1803 lb	792 kg	1746 lb	786 kg	1732 lb	779 kg	1717 lb	746 kg	1645 lb
	A	2391 mm	94 in	2390 mm	94 in	2389 mm	94 in	2389 mm	94 in	2327 mm	92 in
	B	446 mm	18 in	490 mm	19 in	491 mm	19 in	491 mm	19 in	565 mm	22 in
242D3	E	1956 kg	4313 lb	1905 kg	4201 lb	1892 kg	4172 lb	1878 kg	4141 lb	1805 kg	3980 lb
	F	978 kg	2156 lb	953 kg	2100 lb	946 kg	2086 lb	939 kg	2070 lb	903 kg	1990 lb
	A	2347 mm	92 in	2345 mm	92 in	2345 mm	92 in	2345 mm	92 in	2282 mm	90 in
	B	707 mm	28 in	710 mm	28 in	711 mm	28 in	712 mm	28 in	785 mm	31 in
246D3	E	1978 kg	4361 lb	1927 kg	4249 lb	1914 kg	4220 lb	1901 kg	4192 lb	1831 kg	4037 lb
	F	989 kg	2181 lb	964 kg	2125 lb	957 kg	2110 lb	951 kg	2096 lb	916 kg	2019 lb
	A	2416 mm	95 in	2415 mm	95 in	2414 mm	95 in	2414 mm	95 in	2352 mm	93 in
	B	582 mm	23 in	584 mm	23 in	585 mm	23 in	585 mm	23 in	658 mm	26 in
262D3	E	2542 kg	5605 lb	2490 kg	5490 lb	2476 kg	5460 lb	2462 kg	5429 lb	2379 kg	5246 lb
	F	1271 kg	2803 lb	1245 kg	2745 lb	1238 kg	2730 lb	1231 kg	2714 lb	1190 kg	2623 lb
	A	2437 mm	96 in	2435 mm	96 in	2434 mm	96 in	2462 mm	97 in	2371 mm	93 in
	B	927 mm	36 in	930 mm	37 in	931 mm	37 in	932 mm	37 in	1004 mm	40 in
272D3	E	3082 kg	6796 lb	3028 kg	6677 lb	3015 kg	6648 lb	3000 kg	6615 lb	2908 kg	6412 lb
	F	1541 kg	3398 lb	1514 kg	3338 lb	1508 kg	3324 lb	1500 kg	3308 lb	1454 kg	3206 lb
	A	2491 mm	98 in	2489 mm	98 in	2489 mm	98 in	2488 mm	98 in	2425 mm	95 in
	B	954 mm	38 in	957 mm	38 in	958 mm	38 in	958 mm	38 in	1031 mm	41 in
272D3 XE	E	3295 kg	7265 lb	3240 kg	7144 lb	3227 kg	7116 lb	3211 kg	7080 lb	3115 kg	6869 lb
	F	1648 kg	3633 lb	1620 kg	3572 lb	1614 kg	3558 lb	1606 kg	3540 lb	1558 kg	3434 lb
	A	2528 mm	100 in	2527 mm	99 in	2527 mm	99 in	2526 mm	99 in	2464 mm	97 in
	B	922 mm	36 in	924 mm	36 in	924 mm	36 in	925 mm	36 in	997 mm	39 in

Illustration 90 g06407510

GENERAL PURPOSE BUCKETS - WHEELED MODELS

	D	62 in		68 in		74 in		80 in		86 in	
	G	279-5364		279-5368		279-5372		279-5376		292-9270	
	H	173 kg	381 lb	221 kg	487 lb	234 kg	516 lb	247 kg	545 lb	279 kg	615 lb
239D3	E	1956 kg	4313 lb	1905 kg	4201 lb	1892 kg	4172 lb	1878 kg	4141 lb	1803 kg	3976 lb
	F	685 kg	1510 lb	667 kg	1470 lb	662 kg	1460 lb	657 kg	1449 lb	631 kg	1391 lb
	A	2095 mm	82 in	2095 mm	82 in	2095 mm	82 in	2095 mm	82 in	2034 mm	80 in
	B	755 mm	30 in	755 mm	30 in	755 mm	30 in	755 mm	30 in	825 mm	32 in
249D3	E	2217 kg	4888 lb	2166 kg	4776 lb	2153 kg	4747 lb	2139 kg	4716 lb	2058 kg	4538 lb
	F	776 kg	1711 lb	758 kg	1672 lb	754 kg	1662 lb	749 kg	1651 lb	720 kg	1588 lb
	A	2271 mm	89 in	2270 mm	89 in	2270 mm	89 in	2270 mm	89 in	2209 mm	87 in
	B	897 mm	35 in	897 mm	35 in	897 mm	35 in	897 mm	35 in	968 mm	38 in
257D3	E			2246 kg	4952 lb	2233 kg	4924 lb	2219 kg	4893 lb	2137 kg	4712 lb
	F			786 kg	1733 lb	782 kg	1723 lb	777 kg	1713 lb	748 kg	1649 lb
	A			2360 mm	93 in	2360 mm	93 in	2360 mm	93 in	2299 mm	91 in
	B			835 mm	33 in	835 mm	33 in	835 mm	33 in	906 mm	36 in
259D3	E			2475 kg	5457 lb	2462 kg	5429 lb	2448 kg	5398 lb	2361 kg	5206 lb
	F			866 kg	1910 lb	862 kg	1900 lb	857 kg	1889 lb	826 kg	1822 lb
	A			2343 mm	92 in	2343 mm	92 in	2343 mm	92 in	2282 mm	90 in
	B			806 mm	32 in	806 mm	32 in	806 mm	32 in	877 mm	35 in
279D3	E			2808 kg	6192 lb	2795 kg	6163 lb	2781 kg	6132 lb	2753 kg	6070 lb
	F			983 kg	2167 lb	978 kg	2157 lb	973 kg	2146 lb	964 kg	2125 lb
	A			2436 mm	96 in	2436 mm	96 in	2436 mm	96 in	2375 mm	94 in
	B			595 mm	23 in	595 mm	23 in	595 mm	23 in	665 mm	26 in
289D3	E			3644 kg	8035 lb	3631 kg	8006 lb	3615 kg	7971 lb	3503 kg	7724 lb
	F			1275 kg	2812 lb	1271 kg	2802 lb	1265 kg	2790 lb	1226 kg	2703 lb
	A			2441 mm	96 in	2441 mm	96 in	2441 mm	96 in	2379 mm	94 in
	B			945 mm	37 in	945 mm	37 in	945 mm	37 in	1016 mm	40 in

Illustration 91 g06458161

GENERAL PURPOSE BUCKETS - TRACKED MODELS

	D	68 in		74 in		80 in		86 in	
	G	279-5368		279-5372		279-5376		292-9270	
	H	221 kg	487 lb	234 kg	516 lb	247 kg	545 lb	279 kg	615 lb
299D3 (DY9 & P3R)	E	4382 kg	9662 lb	4369 kg	9634 lb	4352 kg	9596 lb	4225 kg	9316 lb
	F	1534 kg	3382 lb	1529 kg	3372 lb	1523 kg	3359 lb	1479 kg	3261 lb
	A	2499 mm	98 in	2499 mm	98 in	2499 mm	98 in	2438 mm	96 in
	B	1021 mm	40 in	1021 mm	40 in	1021 mm	40 in	1092 mm	43 in
299D3 XE (BX9 & B62)	E	4491 kg	9903 lb	4477 kg	9872 lb	4460 kg	9834 lb	4331 kg	9550 lb
	F	1572 kg	3466 lb	1567 kg	3455 lb	1561 kg	3442 lb	1516 kg	3342 lb
	A	2499 mm	98 in	2499 mm	98 in	2499 mm	98 in	2438 mm	96 in
	B	1021 mm	40 in	1021 mm	40 in	1021 mm	40 in	1092 mm	43 in
299D3 (CY9 & JX3)	E	5845 kg	12888 lb	5832 kg	12860 lb	5812 kg	12815 lb	5652 kg	12463 lb
	F	2046 kg	4511 lb	2041 kg	4501 lb	2034 kg	4485 lb	1978 kg	4362 lb
	A	2499 mm	98 in	2499 mm	98 in	2499 mm	98 in	2437 mm	96 in
	B	1021 mm	40 in	1021 mm	40 in	1022 mm	40 in	1092 mm	43 in
299D3 XE (AN9 & GX9)	E	5950 kg	13120 lb	5936 kg	13089 lb	5916 kg	13045 lb	5754 kg	12688 lb
	F	2083 kg	4592 lb	2078 kg	4581 lb	2071 kg	4566 lb	2014 kg	4441 lb
	A	2499 mm	98 in	2499 mm	98 in	2499 mm	98 in	2437 mm	96 in
	B	1021 mm	40 in	1021 mm	40 in	1022 mm	40 in	1092 mm	43 in
299D3 XE (LB3 & S38)	E	5474 kg	12070 lb	5460 kg	12039 lb	5441 kg	11997 lb	5293 kg	11671 lb
	F	1916 kg	4225 lb	1911 kg	4214 lb	1904 kg	4199 lb	1853 kg	4085 lb
	A	2499 mm	98 in	2499 mm	98 in	2499 mm	98 in	2438 mm	96 in
	B	1021 mm	40 in	1021 mm	40 in	1021 mm	40 in	1091 mm	43 in
299D3 XE (XES & R23)	E	5752 kg	12683 lb	5738 kg	12652 lb	5718 kg	12608 lb	5565 kg	12271 lb
	F	2013 kg	4439 lb	2008 kg	4428 lb	2001 kg	4413 lb	1948 kg	4295 lb
	A	2499 mm	98 in	2499 mm	98 in	2499 mm	98 in	2438 mm	96 in
	B	1021 mm	40 in	1021 mm	40 in	1021 mm	40 in	1092 mm	43 in

Illustration 92 g06593874

GENERAL PURPOSE BUCKETS - TRACKED MODELS (CONT.)

	D	68 in		74 in		80 in		86 in		92 in	
	G	532-7738		532-7741		532-7744		532-7747		532-7750	
	H	318 kg	701 lb	336 kg	741 lb	353 kg	778 lb	370 kg	816 lb	388 kg	856 lb
226D3	E	1154 kg	2545 lb	1135 kg	2503 lb	1119 kg	2467 lb	1098 kg	2421 lb	1072 kg	2364 lb
	F	577 kg	1272 lb	568 kg	1251 lb	560 kg	1234 lb	549 kg	1211 lb	536 kg	1182 lb
	A	1973 mm	78 in	1972 mm	78 in	1972 mm	78 in	1971 mm	78 in	1970 mm	78 in
	B	781 mm	31 in	783 mm	31 in	784 mm	31 in	786 mm	31 in	787 mm	31 in
232D3	E	1422 kg	3136 lb	1403 kg	3094 lb	1598 kg	3524 lb	1366 kg	3012 lb	1339 kg	2952 lb
	F	711 kg	1568 lb	702 kg	1547 lb	799 kg	1762 lb	683 kg	1506 lb	670 kg	1476 lb
	A	2152 mm	85 in	2151 mm	85 in	2273 mm	89 in	2149 mm	85 in	2148 mm	85 in
	B	915 mm	36 in	917 mm	36 in	792 mm	31 in	920 mm	36 in	922 mm	36 in
236D3	E	1398 kg	3083 lb	1379 kg	3041 lb	1363 kg	3005 lb	1342 kg	2959 lb	1315 kg	2900 lb
	F	699 kg	1541 lb	690 kg	1520 lb	682 kg	1503 lb	671 kg	1480 lb	658 kg	1450 lb
	A	2270 mm	89 in	2269 mm	89 in	2269 mm	89 in	2268 mm	89 in	2268 mm	89 in
	B	611 mm	24 in	612 mm	24 in	614 mm	24 in	615 mm	24 in	617 mm	24 in
242D3	E	1701 kg	3751 lb	1682 kg	3709 lb	1666 kg	3674 lb	1645 kg	3627 lb	1616 kg	3563 lb
	F	851 kg	1875 lb	841 kg	1854 lb	833 kg	1837 lb	823 kg	1814 lb	808 kg	1782 lb
	A	2225 mm	88 in	2225 mm	88 in	2224 mm	88 in	2224 mm	88 in	2223 mm	88 in
	B	830 mm	33 in	831 mm	33 in	832 mm	33 in	834 mm	33 in	835 mm	33 in
246D3	E	1731 kg	3817 lb	1713 kg	3777 lb	1696 kg	3740 lb	1676 kg	3696 lb	1648 kg	3634 lb
	F	866 kg	1908 lb	857 kg	1889 lb	848 kg	1870 lb	838 kg	1848 lb	824 kg	1817 lb
	A	2296 mm	90 in	2295 mm	90 in	2295 mm	90 in	2294 mm	90 in	2294 mm	90 in
	B	702 mm	28 in	703 mm	28 in	704 mm	28 in	705 mm	28 in	705 mm	28 in
262D3	E	2261 kg	4986 lb	2242 kg	4944 lb	2226 kg	4908 lb	2206 kg	4864 lb	2173 kg	4791 lb
	F	1131 kg	2493 lb	1121 kg	2472 lb	1113 kg	2454 lb	1103 kg	2432 lb	1087 kg	2396 lb
	A	2314 mm	91 in	2314 mm	91 in	2313 mm	91 in	2312 mm	91 in	2312 mm	91 in
	B	1050 mm	41 in	1050 mm	41 in	1052 mm	41 in	1053 mm	41 in	1055 mm	42 in
272D3	E	2777 kg	6123 lb	2758 kg	6081 lb	2742 kg	6046 lb	2721 kg	6000 lb	2686 kg	5923 lb
	F	1389 kg	3062 lb	1379 kg	3041 lb	1371 kg	3023 lb	1361 kg	3000 lb	1343 kg	2961 lb
	A	2369 mm	93 in	2368 mm	93 in	2368 mm	93 in	2367 mm	93 in	2366 mm	93 in
	B	1075 mm	42 in	1076 mm	42 in	1077 mm	42 in	1079 mm	42 in	1080 mm	43 in
272D3 XE	E	2976 kg	6562 lb	2957 kg	6520 lb	2941 kg	6485 lb	2920 kg	6439 lb	2883 kg	6357 lb
	F	1488 kg	3281 lb	1479 kg	3260 lb	1471 kg	3242 lb	1460 kg	3219 lb	1442 kg	3179 lb
	A	2407 mm	95 in	2407 mm	95 in	2406 mm	95 in	2406 mm	95 in	2405 mm	95 in
	B	1041 mm	41 in	1042 mm	41 in	1043 mm	41 in	1044 mm	41 in	1045 mm	41 in

Illustration 93 g06458189

INDUSTRIAL PERFORMANCE BUCKETS (WITH BOLT-ON EDGE) - WHEELED MODELS

	D	68 in		74 in		80 in		86 in		92 in	
	G	532-7738		532-7741		532-7744		532-7747		532-7750	
	H	318 kg	701 lb	336 kg	741 lb	353 kg	778 lb	370 kg	816 lb	388 kg	856 lb
239D3	E	1701 kg	3751 lb	1682 kg	3709 lb	1667 kg	3676 lb	1646 kg	3629 lb	1617 kg	3565 lb
	F	595 kg	1313 lb	589 kg	1298 lb	583 kg	1287 lb	576 kg	1270 lb	566 kg	1248 lb
	A	1979 mm	78 in	1979 mm	78 in	1979 mm	78 in	1979 mm	78 in	1979 mm	78 in
	B	867 mm	34 in	868 mm	34 in	868 mm	34 in	868 mm	34 in	868 mm	34 in
249D3	E	1948 kg	4295 lb	1929 kg	4253 lb	1914 kg	4220 lb	1893 kg	4174 lb	1862 kg	4106 lb
	F	682 kg	1503 lb	675 kg	1489 lb	670 kg	1477 lb	663 kg	1461 lb	652 kg	1437 lb
	A	2154 mm	85 in	2154 mm	85 in	2154 mm	85 in	2154 mm	85 in	2154 mm	85 in
	B	1010 mm	40 in	1010 mm	40 in	1010 mm	40 in	1010 mm	40 in	1010 mm	40 in
257D3	E	2029 kg	4474 lb	2011 kg	4434 lb	1995 kg	4399 lb	1975 kg	4355 lb	1944 kg	4287 lb
	F	710 kg	1566 lb	704 kg	1552 lb	698 kg	1540 lb	691 kg	1524 lb	680 kg	1500 lb
	A	2244 mm	88 in	2244 mm	88 in	2244 mm	88 in	2244 mm	88 in	2244 mm	88 in
	B	948 mm	37 in	948 mm	37 in	948 mm	37 in	948 mm	37 in	948 mm	37 in
259D3	E	2246 kg	4952 lb	2227 kg	4911 lb	2211 kg	4875 lb	2191 kg	4831 lb	2159 kg	4761 lb
	F	786 kg	1733 lb	779 kg	1719 lb	774 kg	1706 lb	767 kg	1691 lb	756 kg	1666 lb
	A	2227 mm	88 in	2227 mm	88 in	2227 mm	88 in	2227 mm	88 in	2227 mm	88 in
	B	919 mm	36 in	919 mm	36 in	919 mm	36 in	919 mm	36 in	919 mm	36 in
279D3	E	2575 kg	5678 lb	2556 kg	5636 lb	2540 kg	5601 lb	2580 kg	5689 lb	2487 kg	5484 lb
	F	901 kg	1987 lb	895 kg	1973 lb	889 kg	1960 lb	903 kg	1991 lb	870 kg	1919 lb
	A	2320 mm	91 in	2320 mm	91 in	2320 mm	91 in	2320 mm	91 in	2320 mm	91 in
	B	707 mm	28 in	707 mm	28 in	707 mm	28 in	707 mm	28 in	707 mm	28 in
289D3	E	3358 kg	7404 lb	3339 kg	7362 lb	3323 kg	7327 lb	3302 kg	7281 lb	3262 kg	7193 lb
	F	1175 kg	2592 lb	1169 kg	2577 lb	1163 kg	2565 lb	1156 kg	2548 lb	1142 kg	2517 lb
	A	2325 mm	92 in	2325 mm	92 in	2325 mm	92 in	2325 mm	92 in	2325 mm	92 in
	B	1058 mm	42 in	1058 mm	42 in	1058 mm	42 in	1058 mm	42 in	1058 mm	42 in

Illustration 94 g06458193

INDUSTRIAL PERFORMANCE BUCKETS (WITH BOLT-ON EDGE) - TRACKED MODELS

	D	68 in		74 in		80 in		86 in		92 in	
	G	532-7738		532-7741		532-7744		532-7747		532-7750	
	H	318 kg	701 lb	336 kg	741 lb	353 kg	778 lb	370 kg	816 lb	388 kg	856 lb
299D3 (DY9 & P3R)	E	4056 kg	8943 lb	4036 kg	8899 lb	4020 kg	8864 lb	3999 kg	8818 lb	3954 kg	8719 lb
	F	1420 kg	3130 lb	1413 kg	3115 lb	1407 kg	3102 lb	1400 kg	3086 lb	1384 kg	3051 lb
	A	2383 mm	94 in	2383 mm	94 in	2383 mm	94 in	2383 mm	94 in	2383 mm	94 in
	B	1134 mm	45 in	1134 mm	45 in	1134 mm	45 in	1134 mm	45 in	1134 mm	45 in
299D3 XE (BX9 & B62)	E	4159 kg	9171 lb	4140 kg	9129 lb	4123 kg	9091 lb	4102 kg	9045 lb	4057 kg	8946 lb
	F	1456 kg	3210 lb	1449 kg	3195 lb	1443 kg	3182 lb	1436 kg	3166 lb	1420 kg	3131 lb
	A	2383 mm	94 in	2383 mm	94 in	2383 mm	94 in	2383 mm	94 in	2383 mm	94 in
	B	1134 mm	45 in	1134 mm	45 in	1134 mm	45 in	1134 mm	45 in	1134 mm	45 in
299D3 (CY9 & JX3)	E	5412 kg	11933 lb	5391 kg	11887 lb	5375 kg	11852 lb	5353 kg	11803 lb	5294 kg	11673 lb
	F	1894 kg	4177 lb	1887 kg	4161 lb	1881 kg	4148 lb	1874 kg	4131 lb	1853 kg	4086 lb
	A	2383 mm	94 in	2383 mm	94 in	2383 mm	94 in	2383 mm	94 in	2383 mm	94 in
	B	1134 mm	45 in	1134 mm	45 in	1134 mm	45 in	1134 mm	45 in	1134 mm	45 in
299D3 XE (AN9 & GX9)	E	5511 kg	12152 lb	5490 kg	12105 lb	5474 kg	12070 lb	5452 kg	12022 lb	5392 kg	11889 lb
	F	1929 kg	4253 lb	1922 kg	4237 lb	1916 kg	4225 lb	1908 kg	4208 lb	1887 kg	4161 lb
	A	2383 mm	94 in	2383 mm	94 in	2383 mm	94 in	2383 mm	94 in	2383 mm	94 in
	B	1134 mm	45 in	1134 mm	45 in	1134 mm	45 in	1134 mm	45 in	1134 mm	45 in
299D3 XE (LB3 & S38)	E	5088 kg	11219 lb	5068 kg	11175 lb	5051 kg	11137 lb	5030 kg	11091 lb	4977 kg	10974 lb
	F	1781 kg	3927 lb	1774 kg	3911 lb	1768 kg	3898 lb	1761 kg	3882 lb	1742 kg	3841 lb
	A	2383 mm	94 in	2383 mm	94 in	2383 mm	94 in	2383 mm	94 in	2383 mm	94 in
	B	1134 mm	45 in	1134 mm	45 in	1134 mm	45 in	1134 mm	45 in	1134 mm	45 in
299D3 XE (XES & R23)	E	5352 kg	11801 lb	5332 kg	11757 lb	5315 kg	11720 lb	5294 kg	11673 lb	5239 kg	11552 lb
	F	1873 kg	4130 lb	1866 kg	4115 lb	1860 kg	4102 lb	1853 kg	4086 lb	1834 kg	4043 lb
	A	2383 mm	94 in	2383 mm	94 in	2383 mm	94 in	2383 mm	94 in	2383 mm	94 in
	B	1134 mm	45 in	1134 mm	45 in	1134 mm	45 in	1134 mm	45 in	1134 mm	45 in

Illustration 95 g06593913

INDUSTRIAL PERFORMANCE BUCKETS (WITH BOLT-ON EDGE) - TRACKED MODELS (CONT.)

	D	62 in		68 in		74 in		80 in		86 in	
	G	431-5570		426-6490		426-6536		426-6548		426-6558	
	H	386 kg	851 lb	411 kg	906 lb	436 kg	961 lb	461 kg	1017 lb	486 kg	1072 lb
226D3	E	1166 kg	2571 lb	1135 kg	2503 lb	1113 kg	2454 lb	1098 kg	2421 lb	1075 kg	2370 lb
	F	583 kg	1286 lb	568 kg	1251 lb	557 kg	1227 lb	549 kg	1211 lb	538 kg	1185 lb
	A	2050 mm	81 in	2049 mm	81 in	2048 mm	81 in	2047 mm	81 in	2046 mm	81 in
	B	686 mm	27 in	689 mm	27 in	691 mm	27 in	692 mm	27 in	695 mm	27 in
232D3	E	1441 kg	3177 lb	1410 kg	3109 lb	1388 kg	3061 lb	1375 kg	3032 lb	1352 kg	2981 lb
	F	721 kg	1589 lb	705 kg	1555 lb	694 kg	1530 lb	688 kg	1516 lb	676 kg	1491 lb
	A	2229 mm	88 in	2227 mm	88 in	2226 mm	88 in	2225 mm	88 in	2224 mm	88 in
	B	821 mm	32 in	824 mm	32 in	826 mm	33 in	828 mm	33 in	831 mm	33 in
236D3	E	1414 kg	3118 lb	1383 kg	3050 lb	1361 kg	3001 lb	1347 kg	2970 lb	1342 kg	2959 lb
	F	707 kg	1559 lb	692 kg	1525 lb	681 kg	1501 lb	674 kg	1485 lb	671 kg	1480 lb
	A	2348 mm	92 in	2347 mm	92 in	2346 mm	92 in	2345 mm	92 in	2345 mm	92 in
	B	516 mm	20 in	518 mm	20 in	520 mm	20 in	521 mm	21 in	523 mm	21 in
242D3	E	1728 kg	3810 lb	1697 kg	3742 lb	1675 kg	3693 lb	1663 kg	3667 lb	1640 kg	3616 lb
	F	864 kg	1905 lb	849 kg	1871 lb	838 kg	1847 lb	832 kg	1833 lb	820 kg	1808 lb
	A	2303 mm	91 in	2302 mm	91 in	2301 mm	91 in	2301 mm	91 in	2300 mm	91 in
	B	735 mm	29 in	736 mm	29 in	738 mm	29 in	739 mm	29 in	741 mm	29 in
246D3	E	1753 kg	3865 lb	1723 kg	3799 lb	1701 kg	3751 lb	1688 kg	3722 lb	1665 kg	3671 lb
	F	877 kg	1933 lb	862 kg	1900 lb	851 kg	1875 lb	844 kg	1861 lb	833 kg	1836 lb
	A	2373 mm	93 in	2373 mm	93 in	2372 mm	93 in	2372 mm	93 in	2371 mm	93 in
	B	606 mm	24 in	608 mm	24 in	609 mm	24 in	610 mm	24 in	611 mm	24 in
262D3	E	2301 kg	5074 lb	2270 kg	5005 lb	2248 kg	4957 lb	2238 kg	4935 lb	2215 kg	4884 lb
	F	1151 kg	2537 lb	1135 kg	2503 lb	1124 kg	2478 lb	1119 kg	2467 lb	1108 kg	2442 lb
	A	2392 mm	94 in	2391 mm	94 in	2390 mm	94 in	2389 mm	94 in	2388 mm	94 in
	B	954 mm	38 in	956 mm	38 in	958 mm	38 in	959 mm	38 in	961 mm	38 in
272D3	E	2829 kg	6238 lb	2798 kg	6170 lb	2775 kg	6119 lb	2768 kg	6103 lb	2745 kg	6053 lb
	F	1415 kg	3119 lb	1399 kg	3085 lb	1388 kg	3059 lb	1384 kg	3052 lb	1373 kg	3026 lb
	A	2446 mm	96 in	2445 mm	96 in	2445 mm	96 in	2444 mm	96 in	2443 mm	96 in
	B	980 mm	39 in	981 mm	39 in	983 mm	39 in	984 mm	39 in	985 mm	39 in
272D3 XE	E	3035 kg	6692 lb	3004 kg	6624 lb	2981 kg	6573 lb	2975 kg	6560 lb	2952 kg	6509 lb
	F	1518 kg	3346 lb	1502 kg	3312 lb	1491 kg	3287 lb	1488 kg	3280 lb	1476 kg	3255 lb
	A	2485 mm	98 in	2484 mm	98 in	2484 mm	98 in	2483 mm	98 in	2482 mm	98 in
	B	946 mm	37 in	947 mm	37 in	948 mm	37 in	949 mm	37 in	950 mm	37 in

Illustration 96 g06458452

MULTI-PURPOSE BUCKETS (WITH BOLT-ON EDGE) - WHEELED MODELS

	D	62 in		68 in		74 in		80 in		86 in	
	G	431-5570		426-6490		426-6536		426-6548		426-6558	
	H	386 kg	851 lb	411 kg	906 lb	436 kg	961 lb	461 kg	1017 lb	486 kg	1072 lb
239D3	E	1729 kg	3812 lb	1698 kg	3744 lb	1676 kg	3696 lb	1664 kg	3669 lb	1642 kg	3621 lb
	F	605 kg	1334 lb	594 kg	1310 lb	587 kg	1293 lb	582 kg	1284 lb	575 kg	1267 lb
	A	2058 mm	81 in	2058 mm	81 in	2058 mm	81 in	2058 mm	81 in	2058 mm	81 in
	B	770 mm	30 in	770 mm	30 in	770 mm	30 in	770 mm	30 in	770 mm	30 in
249D3	E	1984 kg	4375 lb	1953 kg	4306 lb	1931 kg	4258 lb	1920 kg	4234 lb	1897 kg	4183 lb
	F	694 kg	1531 lb	684 kg	1507 lb	676 kg	1490 lb	672 kg	1482 lb	664 kg	1464 lb
	A	2233 mm	88 in	2233 mm	88 in	2233 mm	88 in	2233 mm	88 in	2233 mm	88 in
	B	912 mm	36 in	912 mm	36 in	912 mm	36 in	912 mm	36 in	912 mm	36 in
257D3	E			2033 kg	4483 lb	2011 kg	4434 lb	2001 kg	4412 lb	1978 kg	4361 lb
	F			712 kg	1569 lb	704 kg	1552 lb	700 kg	1544 lb	692 kg	1527 lb
	A			2323 mm	91 in	2322 mm	91 in	2322 mm	91 in	2322 mm	91 in
	B			850 mm	33 in	850 mm	33 in	850 mm	33 in	850 mm	33 in
259D3	E			2256 kg	4974 lb	2234 kg	4926 lb	2225 kg	4906 lb	2202 kg	4855 lb
	F			790 kg	1741 lb	782 kg	1724 lb	779 kg	1717 lb	771 kg	1699 lb
	A			2306 mm	91 in	2306 mm	91 in	2306 mm	91 in	2306 mm	91 in
	B			821 mm	32 in	821 mm	32 in	821 mm	32 in	821 mm	32 in
279D3	E			2648 kg	5839 lb	2563 kg	5651 lb	2617 kg	5770 lb	2594 kg	5720 lb
	F			927 kg	2044 lb	897 kg	1978 lb	916 kg	2020 lb	908 kg	2002 lb
	A			2399 mm	94 in	2399 mm	94 in	2399 mm	94 in	2399 mm	94 in
	B			610 mm	24 in	610 mm	24 in	610 mm	24 in	610 mm	24 in
289D3	E			3397 kg	7490 lb	3374 kg	7440 lb	3370 kg	7431 lb	3347 kg	7380 lb
	F			1189 kg	2622 lb	1181 kg	2604 lb	1180 kg	2601 lb	1171 kg	2583 lb
	A			2403 mm	95 in	2403 mm	95 in	2403 mm	95 in	2403 mm	95 in
	B			960 mm	38 in	960 mm	38 in	960 mm	38 in	960 mm	38 in

Illustration 97 g06458493

MULTI-PURPOSE BUCKETS (WITH BOLT-ON EDGE) - TRACKED MODELS

	D	68 in		74 in		80 in		86 in	
	G	426-6490		426-6536		426-6548		426-6558	
	H	411 kg	906 lb	436 kg	961 lb	461 kg	1017 lb	486 kg	1072 lb
299D3 (DY9 & P3R)	E	4116 kg	9076 lb	4092 kg	9023 lb	4093 kg	9025 lb	4070 kg	8974 lb
	F	1441 kg	3177 lb	1432 kg	3158 lb	1433 kg	3159 lb	1425 kg	3141 lb
	A	2461 mm	97 in	2461 mm	97 in	2461 mm	97 in	2461 mm	97 in
	B	1036 mm	41 in	1036 mm	41 in	1036 mm	41 in	1036 mm	41 in
299D3 XE (BX9 & B62)	E	4222 kg	9310 lb	4198 kg	9257 lb	4199 kg	9259 lb	4176 kg	9208 lb
	F	1478 kg	3258 lb	1469 kg	3240 lb	1470 kg	3241 lb	1462 kg	3223 lb
	A	2461 mm	97 in	2461 mm	97 in	2461 mm	97 in	2461 mm	97 in
	B	1036 mm	41 in	1036 mm	41 in	1036 mm	41 in	1036 mm	41 in
299D3 (CY9 & JX3)	E	5530 kg	12194 lb	5505 kg	12139 lb	5519 kg	12169 lb	5496 kg	12119 lb
	F	1936 kg	4268 lb	1927 kg	4248 lb	1932 kg	4259 lb	1924 kg	4242 lb
	A	2461 mm	97 in	2461 mm	97 in	2461 mm	97 in	2461 mm	97 in
	B	1036 mm	41 in	1036 mm	41 in	1036 mm	41 in	1036 mm	41 in
299D3 XE (AN9 & GX9)	E	5632 kg	12419 lb	5606 kg	12361 lb	5621 kg	12394 lb	5598 kg	12344 lb
	F	1971 kg	4346 lb	1962 kg	4326 lb	1967 kg	4338 lb	1959 kg	4320 lb
	A	2461 mm	97 in	2461 mm	97 in	2461 mm	97 in	2461 mm	97 in
	B	1036 mm	41 in	1036 mm	41 in	1036 mm	41 in	1036 mm	41 in
299D3 XE (LB3 & S38)	E	5179 kg	11420 lb	5154 kg	11365 lb	5161 kg	11380 lb	5138 kg	11329 lb
	F	1813 kg	3997 lb	1804 kg	3978 lb	1806 kg	3983 lb	1798 kg	3965 lb
	A	2462 mm	97 in	2462 mm	97 in	2462 mm	97 in	2462 mm	97 in
	B	1036 mm	41 in	1036 mm	41 in	1036 mm	41 in	1036 mm	41 in
299D3 XE (XES & R23)	E	5450 kg	12017 lb	5425 kg	11962 lb	5434 kg	11982 lb	5411 kg	11931 lb
	F	1908 kg	4206 lb	1899 kg	4187 lb	1902 kg	4194 lb	1894 kg	4176 lb
	A	2462 mm	97 in	2462 mm	97 in	2461 mm	97 in	2461 mm	97 in
	B	1036 mm	41 in	1036 mm	41 in	1036 mm	41 in	1036 mm	41 in

Illustration 98 g06593923

MULTI-PURPOSE BUCKETS (WITH BOLT-ON EDGE) - TRACKED MODELS (CONT.)

	D	62 in		68 in		74 in	
	G	285-6096		285-6099		285-6102	
	H	211 kg	465 lb	226 kg	498 lb	240 kg	529 lb
226D3	E	1351 kg	2979 lb	1336 kg	2946 lb	1322 kg	2915 lb
	F	676 kg	1489 lb	668 kg	1473 lb	661 kg	1458 lb
	A	2070 mm	81 in	2069 mm	81 in	2068 mm	81 in
	B	693 mm	27 in	694 mm	27 in	695 mm	27 in
232D3	E	1631 kg	3596 lb	1616 kg	3563 lb	1602 kg	3532 lb
	F	816 kg	1798 lb	808 kg	1782 lb	801 kg	1766 lb
	A	2249 mm	89 in	2249 mm	89 in	2248 mm	89 in
	B	825 mm	32 in	826 mm	33 in	828 mm	33 in
236D3	E	1604 kg	3537 lb	1589 kg	3504 lb	1575 kg	3473 lb
	F	802 kg	1768 lb	795 kg	1752 lb	788 kg	1736 lb
	A	2365 mm	93 in	2365 mm	93 in	2364 mm	93 in
	B	523 mm	21 in	524 mm	21 in	526 mm	21 in
242D3	E	1927 kg	4249 lb	1912 kg	4216 lb	1898 kg	4185 lb
	F	964 kg	2125 lb	956 kg	2108 lb	949 kg	2093 lb
	A	2321 mm	91 in	2320 mm	91 in	2320 mm	91 in
	B	744 mm	29 in	745 mm	29 in	746 mm	29 in
246D3	E	1949 kg	4298 lb	1934 kg	4264 lb	1920 kg	4234 lb
	F	975 kg	2149 lb	967 kg	2132 lb	960 kg	2117 lb
	A	2390 mm	94 in	2389 mm	94 in	2389 mm	94 in
	B	618 mm	24 in	619 mm	24 in	619 mm	24 in
262D3	E	2514 kg	5543 lb	2499 kg	5510 lb	2486 kg	5482 lb
	F	1257 kg	2772 lb	1250 kg	2755 lb	1243 kg	2741 lb
	A	2410 mm	95 in	2410 mm	95 in	2409 mm	95 in
	B	964 mm	38 in	965 mm	38 in	966 mm	38 in
272D3	E	3055 kg	6736 lb	3040 kg	6703 lb	3026 kg	6672 lb
	F	1528 kg	3368 lb	1520 kg	3352 lb	1513 kg	3336 lb
	A	2464 mm	97 in	2464 mm	97 in	2463 mm	97 in
	B	991 mm	39 in	991 mm	39 in	992 mm	39 in
272D3 XE	E	3270 kg	7210 lb	3255 kg	7177 lb	3241 kg	7146 lb
	F	1635 kg	3605 lb	1628 kg	3589 lb	1621 kg	3573 lb
	A	2502 mm	99 in	2502 mm	99 in	2501 mm	98 in
	B	958 mm	38 in	958 mm	38 in	959 mm	38 in

Illustration 99 g06458505

UTILITY BUCKETS - WHEELED MODELS

	D	62 in		68 in		74 in	
	G	285-6096		285-6099		285-6102	
	H	211 kg	465 lb	266 kg	587 lb	240 kg	529 lb
239D3	E	1922 kg	4238 lb	1907 kg	4205 lb	1893 kg	4174 lb
	F	673 kg	1483 lb	667 kg	1472 lb	663 kg	1461 lb
	A	2070 mm	81 in	2070 mm	81 in	2070 mm	81 in
	B	789 mm	31 in	789 mm	31 in	789 mm	31 in
249D3	E	2183 kg	4814 lb	2169 kg	4783 lb	2155 kg	4752 lb
	F	764 kg	1685 lb	759 kg	1674 lb	754 kg	1663 lb
	A	2246 mm	88 in	2246 mm	88 in	2245 mm	88 in
	B	931 mm	37 in	932 mm	37 in	932 mm	37 in
257D3	E			2246 kg	4952 lb	2233 kg	4924 lb
	F			786 kg	1733 lb	782 kg	1723 lb
	A			2335 mm	92 in	2335 mm	92 in
	B			870 mm	34 in	870 mm	34 in
259D3	E			2477 kg	5462 lb	2463 kg	5431 lb
	F			867 kg	1912 lb	862 kg	1901 lb
	A			2319 mm	91 in	2319 mm	91 in
	B			841 mm	33 in	841 mm	33 in
279D3	E			2808 kg	6192 lb	2794 kg	6161 lb
	F			983 kg	2167 lb	978 kg	2156 lb
	A			2411 mm	95 in	2411 mm	95 in
	B			629 mm	25 in	629 mm	25 in
289D3	E			3649 kg	8046 lb	3636 kg	8017 lb
	F			1277 kg	2816 lb	1273 kg	2806 lb
	A			2416 mm	95 in	2416 mm	95 in
	B			979 mm	39 in	979 mm	39 in

Illustration 100 g06458527

UTILITY BUCKETS - TRACKED MODELS

	D	68 in		74 in	
	G	285-6099		285-6102	
	H	266 kg	587 lb	240 kg	529 lb
299D3 (DY9 & P3R)	E	4394 kg	9689 lb	4381 kg	9660 lb
	F	1538 kg	3391 lb	1533 kg	3381 lb
	A	2474 mm	97 in	2474 mm	97 in
	B	1055 mm	42 in	1056 mm	42 in
299D3 XE (BX9 & B62)	E	4503 kg	9929 lb	4489 kg	9898 lb
	F	1576 kg	3475 lb	1571 kg	3464 lb
	A	2474 mm	97 in	2474 mm	97 in
	B	1055 mm	42 in	1056 mm	42 in
299D3 (CY9 & JX3)	E	5889 kg	12985 lb	5875 kg	12954 lb
	F	2061 kg	4545 lb	2056 kg	4534 lb
	A	2474 mm	97 in	2474 mm	97 in
	B	1056 mm	42 in	1056 mm	42 in
299D3 XE (AN9 & GX9)	E	5994 kg	13217 lb	5980 kg	13186 lb
	F	2098 kg	4626 lb	2093 kg	4615 lb
	A	2474 mm	97 in	2474 mm	97 in
	B	1056 mm	42 in	1056 mm	42 in
299D3 XE (LB3 & S38)	E	5497 kg	12121 lb	5483 kg	12090 lb
	F	1924 kg	4242 lb	1919 kg	4232 lb
	A	2474 mm	97 in	2474 mm	97 in
	B	1055 mm	42 in	1055 mm	42 in
299D3 XE (XES & R23)	E	5776 kg	12736 lb	5762 kg	12705 lb
	F	2022 kg	4458 lb	2017 kg	4447 lb
	A	2474 mm	97 in	2474 mm	97 in
	B	1055 mm	42 in	1055 mm	42 in

Illustration 101 g06593927
UTILITY BUCKETS - TRACKED MODELS (CONT.)

	D	74 in		80 in		86 in		98 in	
	G	279-5421		279-5424		279-5430		296-7597	
	H	266 kg	587 lb	280 kg	617 lb	338 kg	745 lb	368 kg	811 lb
226D3	E	1383 kg	3050 lb	1368 kg	3016 lb	1280 kg	2822 lb	1119 kg	2467 lb
	F	692 kg	1525 lb	684 kg	1508 lb	640 kg	1411 lb	560 kg	1234 lb
	A	2035 mm	80 in	2035 mm	80 in	2002 mm	79 in	2000 mm	79 in
	B	729 mm	29 in	730 mm	29 in	747 mm	29 in	750 mm	30 in
232D3	E	1678 kg	3700 lb	1662 kg	3665 lb	1647 kg	3632 lb	1460 kg	3219 lb
	F	839 kg	1850 lb	831 kg	1832 lb	824 kg	1816 lb	730 kg	1610 lb
	A	2215 mm	87 in	2214 mm	87 in	2213 mm	87 in	2211 mm	87 in
	B	861 mm	34 in	863 mm	34 in	865 mm	34 in	868 mm	34 in
236D3	E	1650 kg	3638 lb	1635 kg	3605 lb	1545 kg	3407 lb	1364 kg	3008 lb
	F	825 kg	1819 lb	818 kg	1803 lb	773 kg	1703 lb	682 kg	1504 lb
	A	2332 mm	92 in	2331 mm	92 in	2298 mm	90 in	2298 mm	90 in
	B	559 mm	22 in	560 mm	22 in	576 mm	23 in	579 mm	23 in
242D3	E	1998 kg	4406 lb	1982 kg	4370 lb	1889 kg	4165 lb	1672 kg	3687 lb
	F	999 kg	2203 lb	991 kg	2185 lb	945 kg	2083 lb	836 kg	1843 lb
	A	2287 mm	90 in	2287 mm	90 in	2254 mm	89 in	2253 mm	89 in
	B	778 mm	31 in	780 mm	31 in	795 mm	31 in	797 mm	31 in
246D3	E	2011 kg	4434 lb	1995 kg	4399 lb	1980 kg	4366 lb	1770 kg	3903 lb
	F	1006 kg	2217 lb	998 kg	2199 lb	990 kg	2183 lb	885 kg	1951 lb
	A	2357 mm	93 in	2365 mm	93 in	2356 mm	93 in	2355 mm	93 in
	B	652 mm	26 in	652 mm	26 in	653 mm	26 in	655 mm	26 in
262D3	E	2618 kg	5773 lb	2603 kg	5740 lb	2588 kg	5707 lb	2313 kg	5100 lb
	F	1309 kg	2886 lb	1302 kg	2870 lb	1294 kg	2853 lb	1157 kg	2550 lb
	A	2376 mm	94 in	2376 mm	94 in	2375 mm	94 in	2374 mm	93 in
	B	998 mm	39 in	999 mm	39 in	1000 mm	39 in	1002 mm	39 in
272D3	E	3190 kg	7034 lb	3174 kg	6999 lb	3070 kg	6769 lb	2759 kg	6084 lb
	F	1595 kg	3517 lb	1587 kg	3499 lb	1535 kg	3385 lb	1380 kg	3042 lb
	A	2431 mm	96 in	2430 mm	96 in	2398 mm	94 in	2396 mm	94 in
	B	1025 mm	40 in	1025 mm	40 in	1040 mm	41 in	1042 mm	41 in
272D3 XE	E	3428 kg	7559 lb	3412 kg	7523 lb	3305 kg	7288 lb	2962 kg	6531 lb
	F	1714 kg	3779 lb	1706 kg	3762 lb	1653 kg	3644 lb	1481 kg	3266 lb
	A	2469 mm	97 in	2468 mm	97 in	2436 mm	96 in	2435 mm	96 in
	B	991 mm	39 in	992 mm	39 in	1006 mm	40 in	1008 mm	40 in

Illustration 102 g06458541

LIGHT MATERIAL BUCKETS - WHEELED MODELS

	D	74 in		80 in		86 in		98 in	
	G	279-5421		279-5424		279-5430		296-7597	
	H	266 kg	587 lb	280 kg	617 lb	338 kg	745 lb	368 kg	811 lb
239D3	E	1977 kg	4359 lb	1962 kg	4326 lb	1870 kg	4123 lb	1670 kg	3682 lb
	F	692 kg	1526 lb	687 kg	1514 lb	655 kg	1443 lb	585 kg	1289 lb
	A	2039 mm	80 in	2039 mm	80 in	2008 mm	79 in	2008 mm	79 in
	B	820 mm	32 in	820 mm	32 in	831 mm	33 in	831 mm	33 in
249D3	E	2255 kg	4972 lb	2239 kg	4937 lb	2144 kg	4728 lb	1920 kg	4234 lb
	F	789 kg	1740 lb	784 kg	1728 lb	750 kg	1655 lb	672 kg	1482 lb
	A	2214 mm	87 in	2214 mm	87 in	2184 mm	86 in	2183 mm	86 in
	B	962 mm	38 in	962 mm	38 in	974 mm	38 in	974 mm	38 in
257D3	E	2323 kg	5122 lb	2307 kg	5087 lb	2215 kg	4884 lb	1998 kg	4406 lb
	F	813 kg	1793 lb	807 kg	1780 lb	775 kg	1709 lb	699 kg	1542 lb
	A	2304 mm	91 in	2304 mm	91 in	2273 mm	89 in	2273 mm	89 in
	B	900 mm	35 in	900 mm	35 in	912 mm	36 in	912 mm	36 in
259D3	E	2570 kg	5667 lb	2554 kg	5632 lb	2458 kg	5420 lb	2217 kg	4888 lb
	F	900 kg	1983 lb	894 kg	1971 lb	860 kg	1897 lb	776 kg	1711 lb
	A	2287 mm	90 in	2287 mm	90 in	2257 mm	89 in	2257 mm	89 in
	B	871 mm	34 in	871 mm	34 in	883 mm	35 in	883 mm	35 in
279D3	E	2897 kg	6388 lb	2881 kg	6353 lb	2859 kg	6304 lb	2544 kg	5610 lb
	F	1014 kg	2236 lb	1008 kg	2223 lb	1001 kg	2206 lb	890 kg	1963 lb
	A	2380 mm	94 in	2380 mm	94 in	2350 mm	93 in	2350 mm	93 in
	B	660 mm	26 in	660 mm	26 in	671 mm	26 in	671 mm	26 in
289D3	E	3810 kg	8401 lb	3794 kg	8366 lb	3685 kg	8125 lb	3338 kg	7360 lb
	F	1334 kg	2940 lb	1328 kg	2928 lb	1290 kg	2844 lb	1168 kg	2576 lb
	A	2384 mm	94 in	2384 mm	94 in	2354 mm	93 in	2354 mm	93 in
	B	1010 mm	40 in	1010 mm	40 in	1021 mm	40 in	1021 mm	40 in

Illustration 103 g06458548

LIGHT MATERIAL BUCKETS - TRACKED MODELS

	D	74 in		80 in		86 in		98 in	
	G	279-5421		279-5424		279-5430		296-7597	
	H	266 kg	587 lb	280 kg	617 lb	338 kg	745 lb	368 kg	811 lb
299D3 (DY9 & P3R)	E	4619 kg	10185 lb	4602 kg	10147 lb	4483 kg	9885 lb	4048 kg	8926 lb
	F	1617 kg	3565 lb	1611 kg	3552 lb	1569 kg	3460 lb	1417 kg	3124 lb
	A	2442 mm	96 in	2442 mm	96 in	2412 mm	95 in	2412 mm	95 in
	B	1086 mm	43 in	1086 mm	43 in	1097 mm	43 in	1098 mm	43 in
299D3 XE (BX9 & B62)	E	4734 kg	10438 lb	4717 kg	10401 lb	4596 kg	10134 lb	4152 kg	9155 lb
	F	1657 kg	3653 lb	1651 kg	3640 lb	1609 kg	3547 lb	1453 kg	3204 lb
	A	2442 mm	96 in	2442 mm	96 in	2412 mm	95 in	2412 mm	95 in
	B	1086 mm	43 in	1086 mm	43 in	1097 mm	43 in	1098 mm	43 in
299D3 (CY9 & JX3)	E	6346 kg	13993 lb	6327 kg	13951 lb	6176 kg	13618 lb	5446 kg	12008 lb
	F	2221 kg	4898 lb	2214 kg	4883 lb	2162 kg	4766 lb	1906 kg	4203 lb
	A	2442 mm	96 in	2442 mm	96 in	2442 mm	96 in	2412 mm	95 in
	B	1086 mm	43 in	1086 mm	43 in	1086 mm	43 in	1086 mm	43 in
299D3 XE (AN9 & GX9)	E	6459 kg	14242 lb	6441 kg	14202 lb	6288 kg	13865 lb	5546 kg	12229 lb
	F	2261 kg	4985 lb	2254 kg	4971 lb	2201 kg	4853 lb	1941 kg	4280 lb
	A	2442 mm	96 in	2442 mm	96 in	2412 mm	95 in	2412 mm	95 in
	B	1086 mm	43 in	1086 mm	43 in	1098 mm	43 in	1098 mm	43 in
299D3 XE (LB3 & S38)	E	5823 kg	12840 lb	5805 kg	12800 lb	5670 kg	12502 lb	5098 kg	11241 lb
	F	2038 kg	4494 lb	2032 kg	4480 lb	1985 kg	4376 lb	1784 kg	3934 lb
	A	2443 mm	96 in	2443 mm	96 in	2412 mm	95 in	2412 mm	95 in
	B	1086 mm	43 in	1086 mm	43 in	1097 mm	43 in	1097 mm	43 in
299D3 XE (XES & R23)	E	6120 kg	13495 lb	6102 kg	13455 lb	6089 kg	13426 lb	5466 kg	12053 lb
	F	2142 kg	4723 lb	2136 kg	4709 lb	2131 kg	4699 lb	1913 kg	4218 lb
	A	2443 mm	96 in	2443 mm	96 in	2443 mm	96 in	2443 mm	96 in
	B	1086 mm	43 in	1086 mm	43 in	1086 mm	43 in	1086 mm	43 in

Illustration 104 g06593943

LIGHT MATERIAL BUCKETS - TRACKED MODELS (CONT.)

	D	62 in		68 in		74 in		80 in	
	G	155-7223		157-7224		157-7225		217-6229	
	H	409 kg	902 lb	425 kg	937 lb	440 kg	970 lb	459 kg	1012 lb
226D3	E	1235 kg	2723 lb	1220 kg	2690 lb	1205 kg	2657 lb	1186 kg	2615 lb
	F	618 kg	1362 lb	610 kg	1345 lb	603 kg	1329 lb	593 kg	1308 lb
	A	2085 mm	82 in	2084 mm	82 in	2083 mm	82 in	2082 mm	82 in
	B	683 mm	27 in	685 mm	27 in	686 mm	27 in	688 mm	27 in
232D3	E	1528 kg	3369 lb	1513 kg	3336 lb	1498 kg	3303 lb	1480 kg	3263 lb
	F	764 kg	1685 lb	757 kg	1668 lb	749 kg	1652 lb	740 kg	1632 lb
	A	2262 mm	89 in	2261 mm	89 in	2261 mm	89 in	2259 mm	89 in
	B	819 mm	32 in	821 mm	32 in	822 mm	32 in	824 mm	32 in
236D3	E	1498 kg	3303 lb	1482 kg	3268 lb	1467 kg	3235 lb	1448 kg	3193 lb
	F	749 kg	1652 lb	741 kg	1634 lb	734 kg	1617 lb	724 kg	1596 lb
	A	2383 mm	94 in	2382 mm	94 in	2382 mm	94 in	2381 mm	94 in
	B	513 mm	20 in	514 mm	20 in	515 mm	20 in	517 mm	20 in
242D3	E	1842 kg	4062 lb	1826 kg	4026 lb	1811 kg	3993 lb	1793 kg	3954 lb
	F	921 kg	2031 lb	913 kg	2013 lb	906 kg	1997 lb	897 kg	1977 lb
	A	2338 mm	92 in	2338 mm	92 in	2337 mm	92 in	2336 mm	92 in
	B	730 mm	29 in	731 mm	29 in	732 mm	29 in	733 mm	29 in
246D3	E	1855 kg	4090 lb	1839 kg	4055 lb	1825 kg	4024 lb	1806 kg	3982 lb
	F	928 kg	2045 lb	920 kg	2027 lb	913 kg	2012 lb	903 kg	1991 lb
	A	2409 mm	95 in	2409 mm	95 in	2409 mm	95 in	2408 mm	95 in
	B	600 mm	24 in	601 mm	24 in	602 mm	24 in	603 mm	24 in
262D3	E	2452 kg	5407 lb	2436 kg	5371 lb	2422 kg	5341 lb	2403 kg	5299 lb
	F	1226 kg	2703 lb	1218 kg	2686 lb	1211 kg	2670 lb	1202 kg	2649 lb
	A	2427 mm	96 in	2426 mm	96 in	2425 mm	95 in	2425 mm	95 in
	B	949 mm	37 in	950 mm	37 in	951 mm	37 in	952 mm	37 in
272D3	E	3014 kg	6646 lb	2998 kg	6611 lb	2984 kg	6580 lb	2965 kg	6538 lb
	F	1507 kg	3323 lb	1499 kg	3305 lb	1492 kg	3290 lb	1483 kg	3269 lb
	A	2482 mm	98 in	2481 mm	98 in	2480 mm	98 in	2480 mm	98 in
	B	973 mm	38 in	974 mm	38 in	975 mm	38 in	976 mm	38 in
272D3 XE	E	3244 kg	7153 lb	3228 kg	7118 lb	3214 kg	7087 lb	3195 kg	7045 lb
	F	1622 kg	3577 lb	1614 kg	3559 lb	1607 kg	3543 lb	1598 kg	3522 lb
	A	2521 mm	99 in	2520 mm	99 in	2520 mm	99 in	2519 mm	99 in
	B	938 mm	37 in	939 mm	37 in	940 mm	37 in	941 mm	37 in

Illustration 105 g06458582

INDUSTRIAL GRAPPLE BUCKETS - WHEELED MODELS

	D	62 in		68 in		74 in		80 in	
	G	155-7223		157-7224		157-7225		217-6229	
	H	409 kg	902 lb	425 kg	937 lb	440 kg	970 lb	459 kg	1012 lb
239D3	E	1832 kg	4040 lb	1816 kg	4004 lb	1802 kg	3973 lb	1783 kg	3932 lb
	F	641 kg	1414 lb	636 kg	1401 lb	631 kg	1391 lb	624 kg	1376 lb
	A	2096 mm	83 in	2096 mm	83 in	2096 mm	83 in	2096 mm	83 in
	B	758 mm	30 in	758 mm	30 in	758 mm	30 in	758 mm	30 in
249D3	E	2106 kg	4644 lb	2091 kg	4611 lb	2076 kg	4578 lb	2058 kg	4538 lb
	F	737 kg	1625 lb	732 kg	1614 lb	727 kg	1602 lb	720 kg	1588 lb
	A	2271 mm	89 in	2271 mm	89 in	2271 mm	89 in	2271 mm	89 in
	B	901 mm	35 in	901 mm	35 in	901 mm	35 in	901 mm	35 in
257D3	E			2165 kg	4774 lb	2151 kg	4743 lb	2133 kg	4703 lb
	F			758 kg	1671 lb	753 kg	1660 lb	747 kg	1646 lb
	A			2360 mm	93 in	2360 mm	93 in	2360 mm	93 in
	B			839 mm	33 in	839 mm	33 in	839 mm	33 in
259D3	E			2407 kg	5307 lb	2393 kg	5277 lb	2375 kg	5237 lb
	F			842 kg	1858 lb	838 kg	1847 lb	831 kg	1833 lb
	A			2344 mm	92 in	2344 mm	92 in	2344 mm	92 in
	B			810 mm	32 in	810 mm	32 in	810 mm	32 in
279D3	E			2736 kg	6033 lb	2793 kg	6159 lb	2704 kg	5962 lb
	F			958 kg	2112 lb	978 kg	2155 lb	946 kg	2087 lb
	A			2437 mm	96 in	2437 mm	96 in	2437 mm	96 in
	B			598 mm	24 in	598 mm	24 in	598 mm	24 in
289D3	E			3633 kg	8011 lb	3619 kg	7980 lb	3601 kg	7940 lb
	F			1272 kg	2804 lb	1267 kg	2793 lb	1260 kg	2779 lb
	A			2441 mm	96 in	2441 mm	96 in	2441 mm	96 in
	B			949 mm	37 in	949 mm	37 in	949 mm	37 in

Illustration 106 g06458615

INDUSTRIAL GRAPPLE BUCKETS - TRACKED MODELS

	D	68 in		74 in		80 in	
	G	157-7224		157-7225		217-6229	
	H	425 kg	937 lb	440 kg	970 lb	459 kg	1012 lb
299D3 (DY9 & P3R)	E	4420 kg	9746 lb	4405 kg	9713 lb	4387 kg	9673 lb
	F	1547 kg	3411 lb	1542 kg	3400 lb	1535 kg	3386 lb
	A	2499 mm	98 in	2499 mm	98 in	2499 mm	98 in
	B	1025 mm	40 in	1025 mm	40 in	1025 mm	40 in
299D3 XE (BX9 & B62)	E	4533 kg	9995 lb	4519 kg	9964 lb	4500 kg	9923 lb
	F	1587 kg	3498 lb	1582 kg	3488 lb	1575 kg	3473 lb
	A	2499 mm	98 in	2499 mm	98 in	2499 mm	98 in
	B	1025 mm	40 in	1025 mm	40 in	1025 mm	40 in
299D3 (CY9 & JX3)	E	6052 kg	13345 lb	6037 kg	13312 lb	6019 kg	13272 lb
	F	2118 kg	4671 lb	2113 kg	4659 lb	2107 kg	4645 lb
	A	2499 mm	98 in	2499 mm	98 in	2499 mm	98 in
	B	1025 mm	40 in	1025 mm	40 in	1025 mm	40 in
299D3 XE (AN9 & GX9)	E	6162 kg	13587 lb	6148 kg	13556 lb	6129 kg	13514 lb
	F	2157 kg	4756 lb	2152 kg	4745 lb	2145 kg	4730 lb
	A	2499 mm	98 in	2499 mm	98 in	2499 mm	98 in
	B	1025 mm	40 in	1025 mm	40 in	1025 mm	40 in
299D3 XE (LB3 & S38)	E	5587 kg	12319 lb	5572 kg	12286 lb	5554 kg	12247 lb
	F	1955 kg	4312 lb	1950 kg	4300 lb	1944 kg	4286 lb
	A	2500 mm	98 in	2500 mm	98 in	2500 mm	98 in
	B	1025 mm	40 in	1025 mm	40 in	1025 mm	40 in
299D3 XE (XES & R23)	E	5879 kg	12963 lb	5864 kg	12930 lb	5846 kg	12890 lb
	F	2058 kg	4537 lb	2052 kg	4526 lb	2046 kg	4512 lb
	A	2500 mm	98 in	2500 mm	98 in	2499 mm	98 in
	B	1025 mm	40 in	1025 mm	40 in	1025 mm	40 in

Illustration 107 g06593959
INDUSTRIAL GRAPPLE BUCKETS - TRACKED MODELS (CONT.)

	D	68 in		74 in	
	G	285-6111		285-6112	
	H	363 kg	800 lb	379 kg	836 lb
226D3	E	1190 kg	2624 lb	1174 kg	2589 lb
	F	595 kg	1312 lb	587 kg	1294 lb
	A	2031 mm	80 in	2031 mm	80 in
	B	719 mm	28 in	721 mm	28 in
232D3	E	1469 kg	3239 lb	1453 kg	3204 lb
	F	735 kg	1620 lb	727 kg	1602 lb
	A	2210 mm	87 in	2209 mm	87 in
	B	854 mm	34 in	856 mm	34 in
236D3	E	1442 kg	3180 lb	1426 kg	3144 lb
	F	721 kg	1590 lb	713 kg	1572 lb
	A	2329 mm	92 in	2328 mm	92 in
	B	549 mm	22 in	550 mm	22 in
242D3	E	1763 kg	3887 lb	1748 kg	3854 lb
	F	882 kg	1944 lb	874 kg	1927 lb
	A	2284 mm	90 in	2284 mm	90 in
	B	767 mm	30 in	768 mm	30 in
246D3	E	1786 kg	3938 lb	1770 kg	3903 lb
	F	893 kg	1969 lb	885 kg	1951 lb
	A	2355 mm	93 in	2354 mm	93 in
	B	638 mm	25 in	639 mm	25 in
262D3	E	2347 kg	5175 lb	2330 kg	5138 lb
	F	1174 kg	2588 lb	1165 kg	2569 lb
	A	2373 mm	93 in	2372 mm	93 in
	B	927 mm	36 in	988 mm	39 in
272D3	E	2884 kg	6359 lb	2867 kg	6322 lb
	F	1442 kg	3180 lb	1434 kg	3161 lb
	A	2428 mm	96 in	2427 mm	96 in
	B	1012 mm	40 in	1013 mm	40 in
272D3 XE	E	3097 kg	6829 lb	3080 kg	6791 lb
	F	1549 kg	3414 lb	1540 kg	3396 lb
	A	2467 mm	97 in	2466 mm	97 in
	B	977 mm	38 in	978 mm	39 in

Illustration 108 g06458643

UTILITY GRAPPLE BUCKETS (WITH BOLT-ON EDGE) - WHEELED MODELS

	D	68 in		74 in	
	G	285-6111		285-6112	
	H	363 kg	800 lb	379 kg	836 lb
239D3	E	1759 kg	3879 lb	1744 kg	3846 lb
	F	616 kg	1358 lb	610 kg	1346 lb
	A	2040 mm	80 in	2040 mm	80 in
	B	800 mm	31 in	800 mm	31 in
249D3	E	2019 kg	4452 lb	2003 kg	4417 lb
	F	707 kg	1558 lb	701 kg	1546 lb
	A	2215 mm	87 in	2215 mm	87 in
	B	943 mm	37 in	943 mm	37 in
257D3	E	2097 kg	4624 lb	2081 kg	4589 lb
	F	734 kg	1618 lb	728 kg	1606 lb
	A	2305 mm	91 in	2305 mm	91 in
	B	881 mm	35 in	881 mm	35 in
259D3	E	2325 kg	5127 lb	2309 kg	5091 lb
	F	814 kg	1794 lb	808 kg	1782 lb
	A	2288 mm	90 in	2288 mm	90 in
	B	852 mm	34 in	852 mm	34 in
279D3	E	2654 kg	5852 lb	2638 kg	5817 lb
	F	929 kg	2048 lb	923 kg	2036 lb
	A	2381 mm	94 in	2381 mm	94 in
	B	640 mm	25 in	640 mm	25 in
289D3	E	3489 kg	7693 lb	3472 kg	7656 lb
	F	1221 kg	2693 lb	1215 kg	2680 lb
	A	2385 mm	94 in	2385 mm	94 in
	B	991 mm	39 in	991 mm	39 in

Illustration 109 g06458649

UTILITY GRAPPLE BUCKETS (WITH BOLT-ON EDGE) - TRACKED MODELS

	D	68 in		74 in	
	G	285-6111		285-6112	
	H	363 kg	800 lb	379 kg	836 lb
299D3 (DY9 & P3R)	E	4228 kg	9323 lb	4210 kg	9283 lb
	F	1480 kg	3263 lb	1474 kg	3249 lb
	A	2443 mm	96 in	2443 mm	96 in
	B	1067 mm	42 in	1067 mm	42 in
299D3 XE (BX9 & B62)	E	4335 kg	9559 lb	4318 kg	9521 lb
	F	1517 kg	3346 lb	1511 kg	3332 lb
	A	2443 mm	96 in	2443 mm	96 in
	B	1067 mm	42 in	1067 mm	42 in
299D3 (CY9 & JX3)	E	5706 kg	12582 lb	5688 kg	12542 lb
	F	1997 kg	4404 lb	1991 kg	4390 lb
	A	2443 mm	96 in	2443 mm	96 in
	B	1067 mm	42 in	1067 mm	42 in
299D3 XE (AN9 & GX9)	E	5811 kg	12813 lb	5792 kg	12771 lb
	F	2034 kg	4485 lb	2027 kg	4470 lb
	A	2443 mm	96 in	2443 mm	96 in
	B	1067 mm	42 in	1067 mm	42 in
299D3 XE (LB3 & S38)	E	5321 kg	11733 lb	5303 kg	11693 lb
	F	1862 kg	4106 lb	1856 kg	4093 lb
	A	2444 mm	96 in	2444 mm	96 in
	B	1066 mm	42 in	1066 mm	42 in
299D3 XE (XES & R23)	E	5598 kg	12344 lb	5580 kg	12304 lb
	F	1959 kg	4320 lb	1953 kg	4306 lb
	A	2444 mm	96 in	2444 mm	96 in
	B	1066 mm	42 in	1066 mm	42 in

Illustration 110 g06593989

UTILITY GRAPPLE BUCKETS (WITH BOLT-ON EDGE) - TRACKED MODELS (CONT.)

Rated Loads for Forks

WARNING

Failure to comply to the rated load can cause possible personal injury or property damage. This includes the risk of unintended boom lowering. Review the rated load of a particular work tool before performing any operation. Make adjustments to the rated load as necessary for non-standard configurations.

Note: Rated loads should be used as a guide. Attachments, uneven ground conditions, soft ground conditions, or poor ground conditions have effects on rated loads. The operator is responsible for being aware of these effects.

The rated operating capacity (ROC) is defined by “SAE J1197-2011”, “ISO 14397-1:2007” and “EN 474-3:2006+A1:2009” as the least amount of weight of the following conditions:

- 50% of the full static tipping load for wheeled machines
- 35% of the full static tipping load for track machines
- The lifting capacity to maximum height

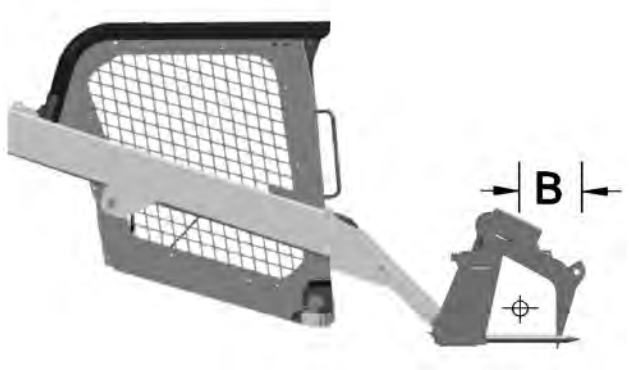

Illustration 111 g06399904

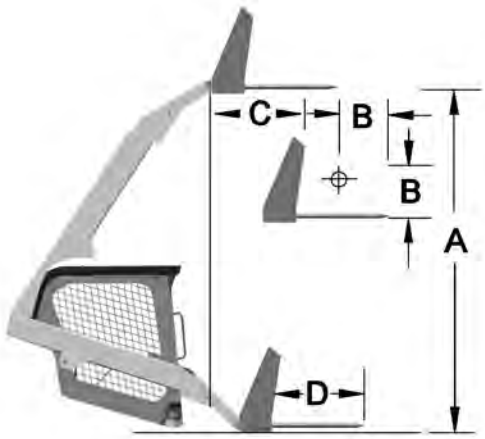

Illustration 112 g06399909

A – Maximum Fork Height

B – Load Center

C – Reach

D – Tine Length

E – Tipping Load

F – Rated Operating Capacity (ROC)

G – Work Tool Part Number

H – Work Tool Mass

The maximum fork height (ground to top face of fork) is given for a pallet fork that is horizontal at maximum lift height. The reach (front tires to front face of fork) is given for a pallet fork that is horizontal maximum reach.

Rated loads are based on a standard machine with the following conditions:

- 10 x 16.5 tires on 226D3, and 232D3 machines.
- 12 x 16.5 tires on 236D3, 242D3, 246D3, 262D3, and 272D3 machines.
- 14 x 17.5 tires on 272D3 XE machines.
- lubricants
- full fuel tank
- 75 kg (165 lb) operator
- Cat fork, carriage, and tines
- Undercarriage with 320 mm wide tracks and dual flange front/single flange rear idlers on 239D3, 249D3, and 259D3 machines.
- Undercarriages with either 400 mm (15.75 inch) or 450 mm (17.72 inch) wide tracks and triple flange front/rear idlers on 279D3, and 289D3 machines.
- Undercarriages with 450 mm (17.72 inch) wide tracks and dual flange front/single flange rear idlers on 299D3 machines.
- Undercarriages with 400 mm (15.75 inch) wide tracks and triple flange front/rear idlers on 299D3 XE machines.

Note: All Caterpillar Premium Conventional tires are at the suggested operating inflation pressure. Refer to the Operation and Maintenance Manual, “Tire Inflation - Check” for the proper tire inflation pressure.

Note: The Steel Track Undercarriage attachment will increase the rated operating loads inch the following tables by 103 kg (227 lb) for 299D3 and 299D3 XE machines.

The following tables provide the rated operating loads for the standard machine configuration with a fork.

	D	36 in		42 in		48 in	
	G	351-9371		351-9371		351-9371	
		195-6943/151-5134		195-6942/149-1412		195-8545/161-2437	
	H	175 kg	386 lb	186 kg	410 lb	195 kg	430 lb
	B	455 mm	18 in	535 mm	21 in	610 mm	24 in
226D3	E	1062 kg	2342 lb	999 kg	2203 lb	947 kg	2088 lb
	F	531 kg	1171 lb	500 kg	1101 lb	474 kg	1044 lb
	A	2717 mm	107 in	2727 mm	107 in	2731 mm	108 in
	C	757 mm	30 in	757 mm	30 in	757 mm	30 in
232D3	E	1283 kg	2829 lb	999 kg	2203 lb	1149 kg	2534 lb
	F	642 kg	1415 lb	500 kg	1101 lb	575 kg	1267 lb
	A	2895 mm	114 in	2727 mm	107 in	2907 mm	114 in
	C	717 mm	28 in	757 mm	30 in	718 mm	28 in
236D3	E	1266 kg	2792 lb	1195 kg	2635 lb	1137 kg	2507 lb
	F	633 kg	1396 lb	598 kg	1317 lb	569 kg	1254 lb
	A	3029 mm	119 in	3040 mm	120 in	3045 mm	120 in
	C	808 mm	32 in	808 mm	32 in	808 mm	32 in
242D3	E	1500 kg	3308 lb	1416 kg	3122 lb	1347 kg	2970 lb
	F	750 kg	1654 lb	708 kg	1561 lb	674 kg	1485 lb
	A	2980 mm	117 in	2990 mm	118 in	2994 mm	118 in
	C	703 mm	28 in	703 mm	28 in	703 mm	28 in
246D3	E	1549 kg	3416 lb	1468 kg	3237 lb	1402 kg	3091 lb
	F	775 kg	1708 lb	734 kg	1618 lb	701 kg	1546 lb
	A	3055 mm	120 in	3065 mm	121 in	3068 mm	121 in
	C	856 mm	34 in	855 mm	34 in	856 mm	34 in
262D3	E	1964 kg	4331 lb	1860 kg	4101 lb	1775 kg	3914 lb
	F	982 kg	2165 lb	930 kg	2051 lb	888 kg	1957 lb
	A	3076 mm	121 in	3086 mm	121 in	3089 mm	122 in
	C	746 mm	29 in	746 mm	29 in	746 mm	29 in
272D3	E	2384 kg	5257 lb	2261 kg	4986 lb	2160 kg	4763 lb
	F	1192 kg	2628 lb	1131 kg	2493 lb	1080 kg	2381 lb
	A	3129 mm	123 in	3138 mm	124 in	3142 mm	124 in
	C	752 mm	30 in	752 mm	30 in	752 mm	30 in
272D3 XE	E	2527 kg	5572 lb	2395 kg	5281 lb	2288 kg	5045 lb
	F	1264 kg	2786 lb	1198 kg	2640 lb	1144 kg	2523 lb
	A	3166 mm	125 in	3176 mm	125 in	3179 mm	125 in
	C	716 mm	28 in	716 mm	28 in	716 mm	28 in

Illustration 113 g06708213
PALLET FORK - WHEELED MODELS

	D	36 in		42 in		48 in	
	G	351-9371		351-9371		351-9371	
		195-6943/151-5134		195-6942/149-1412		195-8545/161-2437	
	H	175 kg	386 lb	186 kg	410 lb	195 kg	430 lb
	B	455 mm	18 in	535 mm	21 in	610 mm	24 in
239D3	E	1534 kg	3382 lb	1447 kg	3191 lb	1377 kg	3036 lb
	F	537 kg	1184 lb	506 kg	1117 lb	482 kg	1063 lb
	A	2701 mm	106 in	2711 mm	107 in	2714 mm	107 in
	C	839 mm	33 in	839 mm	33 in	839 mm	33 in
249D3	E	1734 kg	3823 lb	1637 kg	3610 lb	1558 kg	3435 lb
	F	607 kg	1338 lb	573 kg	1263 lb	545 kg	1202 lb
	A	2889 mm	114 in	2899 mm	114 in	2903 mm	114 in
	C	790 mm	31 in	791 mm	31 in	791 mm	31 in
257D3	E	1836 kg	4048 lb	1736 kg	3828 lb	1655 kg	3649 lb
	F	643 kg	1417 lb	608 kg	1340 lb	579 kg	1277 lb
	A	2958 mm	116 in	2968 mm	117 in	2971 mm	117 in
	C	836 mm	33 in	837 mm	33 in	837 mm	33 in
259D3	E	2007 kg	4425 lb	1898 kg	4185 lb	1809 kg	3989 lb
	F	702 kg	1549 lb	664 kg	1465 lb	633 kg	1396 lb
	A	2962 mm	117 in	2972 mm	117 in	2975 mm	117 in
	C	780 mm	31 in	781 mm	31 in	781 mm	31 in
279D3	E	2331 kg	5140 lb	2214 kg	4882 lb	2119 kg	4672 lb
	F	816 kg	1799 lb	775 kg	1709 lb	742 kg	1635 lb
	A	3036 mm	120 in	3046 mm	120 in	3049 mm	120 in
	C	876 mm	34 in	877 mm	35 in	877 mm	35 in
289D3	E	2920 kg	6439 lb	2766 kg	6099 lb	2642 kg	5826 lb
	F	1022 kg	2254 lb	968 kg	2135 lb	925 kg	2039 lb
	A	3031 mm	119 in	3041 mm	120 in	3044 mm	120 in
	C	769 mm	30 in	769 mm	30 in	769 mm	30 in

Illustration 114 g06708228

PALLET FORK - TRACKED MODELS

	D	36 in		42 in		48 in	
	G	351-9371		351-9371		351-9371	
		195-6943/151-5134		195-6942/149-1412		195-8545/161-2437	
	H	175 kg	386 lb	186 kg	410 lb	195 kg	430 lb
	B	455 mm	18 in	535 mm	21 in	610 mm	24 in
299D3 (DY9 & P3R)	E	3448 kg	7603 lb	3266 kg	7202 lb	3119 kg	6877 lb
	F	1207 kg	2661 lb	1143 kg	2521 lb	1092 kg	2407 lb
	A	3123 mm	123 in	3133 mm	123 in	3137 mm	124 in
	C	780 mm	31 in	779 mm	31 in	779 mm	31 in
299D3 XE (BX9 & B62)	E	3532 kg	7788 lb	3346 kg	7378 lb	3196 kg	7047 lb
	F	1236 kg	2726 lb	1171 kg	2582 lb	1119 kg	2467 lb
	A	3123 mm	123 in	3133 mm	123 in	3137 mm	124 in
	C	780 mm	31 in	779 mm	31 in	779 mm	31 in
299D3 (CY9 & JX3)	E	4281 kg	9440 lb	4042 kg	8913 lb	3849 kg	8487 lb
	F	1498 kg	3304 lb	1415 kg	3119 lb	1347 kg	2970 lb
	A	3126 mm	123 in	3136 mm	123 in	3140 mm	124 in
	C	783 mm	31 in	782 mm	31 in	782 mm	31 in
299D3 XE (AN9 & GX9)	E	4281 kg	9440 lb	4114 kg	9071 lb	3918 kg	8639 lb
	F	1498 kg	3304 lb	1440 kg	3175 lb	1371 kg	3024 lb
	A	3126 mm	123 in	3136 mm	123 in	3140 mm	124 in
	C	783 mm	31 in	782 mm	31 in	782 mm	31 in
299D3 XE (LB3 & S38)	E	4358 kg	9609 lb	3993 kg	8805 lb	3814 kg	8410 lb
	F	1525 kg	3363 lb	1398 kg	3082 lb	1335 kg	2943 lb
	A	3126 mm	123 in	3139 mm	124 in	3142 mm	124 in
	C	783 mm	31 in	781 mm	31 in	781 mm	31 in
299D3 XE (XES & R23)	E	4428 kg	9764 lb	4195 kg	9250 lb	4007 kg	8835 lb
	F	1550 kg	3417 lb	1468 kg	3237 lb	1402 kg	3092 lb
	A	3127 mm	123 in	3138 mm	124 in	3142 mm	124 in
	C	783 mm	31 in	782 mm	31 in	782 mm	31 in

Illustration 115 g07581339

PALLET FORKS - TRACKED MODELS (CONT.)

	D	42 in		48 in		60 in	
	G	540-1431		540-1432		540-1433	
		532-7810		532-7810		532-7810	
	H	274 kg	604 lb	287 kg	633 lb	314 kg	692 lb
	B	533 mm	21 in	610 mm	24 in	762 mm	30 in
226D3	E	930 kg	2051 lb	877 kg	1934 lb	778 kg	1715 lb
	F	465 kg	1025 lb	439 kg	967 lb	389 kg	858 lb
	A	2702 mm	106 in	2697 mm	106 in	2696 mm	106 in
	C	768 mm	30 in	771 mm	30 in	775 mm	31 in
232D3	E	1141 kg	2516 lb	1078 kg	2377 lb	964 kg	2126 lb
	F	571 kg	1258 lb	539 kg	1188 lb	482 kg	1063 lb
	A	2878 mm	113 in	2872 mm	113 in	2869 mm	113 in
	C	729 mm	29 in	733 mm	29 in	736 mm	29 in
236D3	E	1125 kg	2481 lb	1065 kg	2348 lb	954 kg	2104 lb
	F	563 kg	1240 lb	533 kg	1174 lb	477 kg	1052 lb
	A	3017 mm	119 in	3013 mm	119 in	3013 mm	119 in
	C	819 mm	32 in	822 mm	32 in	825 mm	32 in
242D3	E	1347 kg	2970 lb	1276 kg	2814 lb	1146 kg	2527 lb
	F	674 kg	1485 lb	638 kg	1407 lb	573 kg	1263 lb
	A	2966 mm	117 in	2961 mm	117 in	2960 mm	117 in
	C	713 mm	28 in	716 mm	28 in	718 mm	28 in
246D3	E	1397 kg	3080 lb	1328 kg	2928 lb	1202 kg	2650 lb
	F	699 kg	1540 lb	664 kg	1464 lb	601 kg	1325 lb
	A	3041 mm	120 in	3036 mm	120 in	3035 mm	119 in
	C	865 mm	34 in	868 mm	34 in	870 mm	34 in
262D3	E	1788 kg	3943 lb	1701 kg	3751 lb	1541 kg	3398 lb
	F	894 kg	1971 lb	851 kg	1875 lb	771 kg	1699 lb
	A	3061 mm	121 in	3056 mm	120 in	3054 mm	120 in
	C	756 mm	30 in	758 mm	30 in	760 mm	30 in
272D3	E	2188 kg	4825 lb	2084 kg	4595 lb	1895 kg	4178 lb
	F	1094 kg	2412 lb	1042 kg	2298 lb	948 kg	2089 lb
	A	3114 mm	123 in	3108 mm	122 in	3106 mm	122 in
	C	761 mm	30 in	764 mm	30 in	766 mm	30 in
272D3 XE	E	2322 kg	5120 lb	2211 kg	4875 lb	2011 kg	4434 lb
	F	1161 kg	2560 lb	1106 kg	2438 lb	1006 kg	2217 lb
	A	3152 mm	124 in	3147 mm	124 in	3145 mm	124 in
	C	725 mm	29 in	727 mm	29 in	729 mm	29 in

Illustration 116 g06458739

HEAVY DUTY PALLET FORK - WHEELED MODELS

	D	42 in		48 in		60 in	
	G	540-1431		540-1432		540-1433	
		532-7810		532-7810		532-7810	
	H	274 kg	604 lb	287 kg	633 lb	314 kg	692 lb
	B	533 mm	21 in	610 mm	24 in	762 mm	30 in
239D3	E	1377 kg	3036 lb	1305 kg	2878 lb	1172 kg	2584 lb
	F	482 kg	1063 lb	457 kg	1007 lb	410 kg	904 lb
	A	2687 mm	106 in	2682 mm	106 in	2681 mm	106 in
	C	850 mm	33 in	853 mm	34 in	856 mm	34 in
249D3	E	1566 kg	3453 lb	1485 kg	3274 lb	1337 kg	2948 lb
	F	548 kg	1209 lb	520 kg	1146 lb	468 kg	1032 lb
	A	2875 mm	113 in	2870 mm	113 in	2868 mm	113 in
	C	803 mm	32 in	806 mm	32 in	809 mm	32 in
257D3	E	1664 kg	3669 lb	1581 kg	3486 lb	1429 kg	3151 lb
	F	582 kg	1284 lb	553 kg	1220 lb	500 kg	1103 lb
	A	2941 mm	116 in	2935 mm	116 in	2933 mm	115 in
	C	850 mm	33 in	853 mm	34 in	857 mm	34 in
259D3	E	1825 kg	4024 lb	1735 kg	3826 lb	1570 kg	3462 lb
	F	639 kg	1408 lb	607 kg	1339 lb	550 kg	1212 lb
	A	2947 mm	116 in	2941 mm	116 in	2939 mm	116 in
	C	793 mm	31 in	796 mm	31 in	800 mm	31 in
279D3	E	2140 kg	4719 lb	2043 kg	4505 lb	1864 kg	4110 lb
	F	749 kg	1652 lb	715 kg	1577 lb	652 kg	1439 lb
	A	3022 mm	119 in	3017 mm	119 in	3015 mm	119 in
	C	888 mm	35 in	891 mm	35 in	894 mm	35 in
289D3	E	2692 kg	5936 lb	2565 kg	5656 lb	2335 kg	5149 lb
	F	942 kg	2078 lb	898 kg	1980 lb	817 kg	1801 lb
	A	3016 mm	119 in	3011 mm	119 in	3009 mm	118 in
	C	780 mm	31 in	783 mm	31 in	786 mm	31 in

Illustration 117 g06458741

HEAVY DUTY PALLET FORK - TRACKED MODELS

	D	42 in		48 in		60 in	
	G	540-1431		540-1432		540-1433	
		532-7810		532-7810		532-7810	
	H	274 kg	604 lb	287 kg	633 lb	314 kg	692 lb
	B	533 mm	21 in	610 mm	24 in	762 mm	30 in
299D3 (DY9 & P3R)	E	3190 kg	7034 lb	3041 kg	6705 lb	2771 kg	6110 lb
	F	1117 kg	2462 lb	1064 kg	2347 lb	970 kg	2139 lb
	A	3109 mm	122 in	3104 mm	122 in	3103 mm	122 in
	C	789 mm	31 in	792 mm	31 in	794 mm	31 in
299D3 XE (BX9 & B62)	E	3270 kg	7210 lb	3117 kg	6873 lb	2841 kg	6264 lb
	F	1145 kg	2524 lb	1091 kg	2406 lb	994 kg	2193 lb
	A	3109 mm	122 in	3104 mm	122 in	3103 mm	122 in
	C	789 mm	31 in	792 mm	31 in	794 mm	31 in
299D3 (CY9 & JX3)	E	3963 kg	8738 lb	3766 kg	8304 lb	3416 kg	7532 lb
	F	1387 kg	3058 lb	1318 kg	2906 lb	1196 kg	2636 lb
	A	3114 mm	123 in	3110 mm	122 in	3110 mm	122 in
	C	790 mm	31 in	792 mm	31 in	794 mm	31 in
299D3 XE (AN9 & GX9)	E	4035 kg	8897 lb	3834 kg	8454 lb	3478 kg	7669 lb
	F	1412 kg	3114 lb	1342 kg	2959 lb	1217 kg	2684 lb
	A	3115 mm	123 in	3110 mm	122 in	3110 mm	122 in
	C	790 mm	31 in	792 mm	31 in	794 mm	31 in
299D3 XE (LB3 & S38)	E	3915 kg	8633 lb	3732 kg	8229 lb	3403 kg	7504 lb
	F	1370 kg	3021 lb	1306 kg	2880 lb	1191 kg	2626 lb
	A	3116 mm	123 in	3112 mm	123 in	3111 mm	122 in
	C	790 mm	31 in	792 mm	31 in	794 mm	31 in
299D3 XE (XES & R23)	E	4116 kg	9076 lb	3924 kg	8652 lb	3580 kg	7894 lb
	F	1441 kg	3177 lb	1373 kg	3028 lb	1253 kg	2763 lb
	A	3115 mm	123 in	3111 mm	122 in	3110 mm	122 in
	C	791 mm	31 in	793 mm	31 in	795 mm	31 in

Illustration 118 g06594035

HEAVY DUTY PALLET FORK - TRACKED MODELS (CONT.)

	D	66 in		72 in	
	G	285-6105		285-6110	
	H	198 kg	437 lb	219 kg	483 lb
	B	314 mm	12 in	314 mm	12 in
226D3	E	1143 kg	2520 lb	1128 kg	2487 lb
	F	572 kg	1260 lb	564 kg	1244 lb
232D3	E	1381 kg	3045 lb	1366 kg	3012 lb
	F	691 kg	1523 lb	683 kg	1506 lb
236D3	E	1360 kg	2999 lb	1344 kg	2964 lb
	F	680 kg	1499 lb	672 kg	1482 lb
242D3	E	1618 kg	3568 lb	1603 kg	3535 lb
	F	809 kg	1784 lb	802 kg	1767 lb
246D3	E	1659 kg	3658 lb	1643 kg	3623 lb
	F	830 kg	1829 lb	822 kg	1811 lb
262D3	E	2116 kg	4666 lb	2101 kg	4633 lb
	F	1058 kg	2333 lb	1051 kg	2316 lb
272D3	E	2573 kg	5673 lb	2557 kg	5638 lb
	F	1287 kg	2837 lb	1279 kg	2819 lb
272D3 XE	E	2737 kg	6035 lb	2721 kg	6000 lb
	F	1369 kg	3018 lb	1361 kg	3000 lb

Illustration 119 g06458753
UTILITY FORK - WHEELED MODELS

	D	66 in		72 in	
	G	285-6105		285-6110	
	H	198 kg	437 lb	219 kg	483 lb
	B	314 mm	12 in	314 mm	12 in
239D3	E	1640 kg	3616 lb	1625 kg	3583 lb
	F	574 kg	1266 lb	569 kg	1254 lb
249D3	E	1857 kg	4095 lb	1842 kg	4062 lb
	F	650 kg	1433 lb	645 kg	1422 lb
257D3	E	1947 kg	4293 lb	1931 kg	4258 lb
	F	681 kg	1503 lb	676 kg	1490 lb
259D3	E	2134 kg	4705 lb	2119 kg	4672 lb
	F	747 kg	1647 lb	742 kg	1635 lb
279D3	E	2504 kg	5521 lb	2488 kg	5486 lb
	F	876 kg	1932 lb	871 kg	1920 lb
289D3	E	3117 kg	6873 lb	3102 kg	6840 lb
	F	1091 kg	2406 lb	1086 kg	2394 lb
299D3 (DY9 & P3R)	E	3708 kg	8176 lb	3693 kg	8143 lb
	F	1298 kg	2862 lb	1293 kg	2850 lb
299D3 XE (BX9 & B62)	E	3799 kg	8377 lb	3784 kg	8344 lb
	F	1330 kg	2932 lb	1324 kg	2920 lb
299D3 (CY9 & JX3)	E	4732 kg	10434 lb	4718 kg	10403 lb
	F	1656 kg	3652 lb	1651 kg	3641 lb
299D3 XE (AN9 & GX9)	E	4817 kg	10621 lb	4802 kg	10588 lb
	F	1686 kg	3718 lb	1681 kg	3706 lb
299D3 XE (LB3 & S38)	E	4573 kg	10083 lb	4558 kg	10050 lb
	F	1601 kg	3529 lb	1595 kg	3518 lb
299D3 XE (XES & R23)	E	4804 kg	10593 lb	4789 kg	10560 lb
	F	1681 kg	3707 lb	1676 kg	3696 lb

Illustration 120 g06594064

UTILITY FORK - TRACKED MODELS

	D	66 in		72 in	
	G	285-6114		285-6115	
	H	304 kg	670 lb	326 kg	719 lb
	B	314 mm	12 in	314 mm	12 in
226D3	E	1044 kg	2302 lb	1026 kg	2262 lb
	F	522 kg	1151 lb	513 kg	1131 lb
232D3	E	1283 kg	2829 lb	1265 kg	2789 lb
	F	642 kg	1415 lb	633 kg	1395 lb
236D3	E	1260 kg	2778 lb	1242 kg	2739 lb
	F	630 kg	1389 lb	621 kg	1369 lb
242D3	E	1520 kg	3352 lb	1502 kg	3312 lb
	F	760 kg	1676 lb	751 kg	1656 lb
246D3	E	1560 kg	3440 lb	1542 kg	3400 lb
	F	780 kg	1720 lb	771 kg	1700 lb
262D3	E	2018 kg	4450 lb	2000 kg	4410 lb
	F	1009 kg	2225 lb	1000 kg	2205 lb
272D3	E	2474 kg	5455 lb	2456 kg	5415 lb
	F	1237 kg	2728 lb	1228 kg	2708 lb
272D3 XE	E	2638 kg	5817 lb	2620 kg	5777 lb
	F	1319 kg	2908 lb	1310 kg	2889 lb

Illustration 121 g06458787
UTILITY GRAPPLE FORK - WHEELED MODELS

	D	66 in		72 in	
	G	285-6114		285-6115	
	H	304 kg	670 lb	326 kg	719 lb
	B	314 mm	12 in	314 mm	12 in
239D3	E	1541 kg	3398 lb	1524 kg	3360 lb
	F	539 kg	1189 lb	533 kg	1176 lb
249D3	E	1758 kg	3876 lb	1741 kg	3839 lb
	F	615 kg	1357 lb	609 kg	1344 lb
257D3	E	1847 kg	4073 lb	1830 kg	4035 lb
	F	646 kg	1425 lb	641 kg	1412 lb
259D3	E	2035 kg	4487 lb	2017 kg	4447 lb
	F	712 kg	1571 lb	706 kg	1557 lb
279D3	E	2358 kg	5199 lb	2340 kg	5160 lb
	F	825 kg	1820 lb	819 kg	1806 lb
289D3	E	3018 kg	6655 lb	3000 kg	6615 lb
	F	1056 kg	2329 lb	1050 kg	2315 lb
299D3 (DY9 & P3R)	E	3609 kg	7958 lb	3592 kg	7920 lb
	F	1263 kg	2785 lb	1257 kg	2772 lb
299D3 XE (BX9 & B62)	E	3701 kg	8161 lb	3683 kg	8121 lb
	F	1295 kg	2856 lb	1289 kg	2842 lb
299D3 (CY9 & JX3)	E	4636 kg	10222 lb	4618 kg	10183 lb
	F	1623 kg	3578 lb	1616 kg	3564 lb
299D3 XE (AN9 & GX9)	E	4720 kg	10408 lb	4703 kg	10370 lb
	F	1652 kg	3643 lb	1646 kg	3630 lb
299D3 XE (LB3 & S38)	E	4475 kg	9867 lb	4458 kg	9830 lb
	F	1566 kg	3454 lb	1560 kg	3440 lb
299D3 XE (XES & R23)	E	4706 kg	10377 lb	4689 kg	10339 lb
	F	1647 kg	3632 lb	1641 kg	3619 lb

Illustration 122 g06594331

UTILITY GRAPPLE FORK - TRACKED MODELS

	D	66 in		72 in	
	G	279-5350		279-5360	
	H	502 kg	1107 lb	548 kg	1208 lb
	B	280 mm	11 in	280 mm	11 in
226D3	E	842 kg	1857 lb	801 kg	1766 lb
	F	421 kg	928 lb	401 kg	883 lb
232D3	E	1079 kg	2379 lb	1039 kg	2291 lb
	F	540 kg	1190 lb	520 kg	1145 lb
236D3	E	1055 kg	2326 lb	1014 kg	2236 lb
	F	528 kg	1163 lb	507 kg	1118 lb
242D3	E	1312 kg	2893 lb	1272 kg	2805 lb
	F	656 kg	1446 lb	636 kg	1402 lb
246D3	E	1352 kg	2981 lb	1312 kg	2893 lb
	F	676 kg	1491 lb	656 kg	1446 lb
262D3	E	1802 kg	3973 lb	1762 kg	3885 lb
	F	901 kg	1987 lb	881 kg	1943 lb
272D3	E	2251 kg	4963 lb	2211 kg	4875 lb
	F	1126 kg	2482 lb	1106 kg	2438 lb
272D3 XE	E	2412 kg	5318 lb	2372 kg	5230 lb
	F	1206 kg	2659 lb	1186 kg	2615 lb

Illustration 123 g06458795
INDUSTRIAL GRAPPLE FORK - WHEELED MODELS

	D	66 in		72 in	
	G	279-5350		279-5360	
	H	502 kg	1107 lb	548 kg	1208 lb
	B	280 mm	11 in	280 mm	11 in
239D3	E	1336 kg	2946 lb	1296 kg	2858 lb
	F	468 kg	1031 lb	454 kg	1000 lb
249D3	E	1549 kg	3416 lb	1510 kg	3330 lb
	F	542 kg	1195 lb	529 kg	1165 lb
257D3	E	1639 kg	3614 lb	1599 kg	3526 lb
	F	574 kg	1265 lb	560 kg	1234 lb
259D3	E	1824 kg	4022 lb	1784 kg	3934 lb
	F	638 kg	1408 lb	624 kg	1377 lb
279D3	E	2145 kg	4730 lb	2105 kg	4642 lb
	F	751 kg	1655 lb	737 kg	1625 lb
289D3	E	2792 kg	6156 lb	2752 kg	6068 lb
	F	977 kg	2155 lb	963 kg	2124 lb
299D3 (DY9 & P3R)	E	3372 kg	7435 lb	3332 kg	7347 lb
	F	1180 kg	2602 lb	1166 kg	2571 lb
299D3 XE (BX9 & B62)	E	3462 kg	7634 lb	3422 kg	7546 lb
	F	1212 kg	2672 lb	1198 kg	2641 lb
299D3 (CY9 & JX3)	E	4364 kg	9623 lb	4325 kg	9537 lb
	F	1527 kg	3368 lb	1514 kg	3338 lb
299D3 XE (AN9 & GX9)	E	4447 kg	9806 lb	4408 kg	9720 lb
	F	1556 kg	3432 lb	1543 kg	3402 lb
299D3 XE (LB3 & S38)	E	4219 kg	9303 lb	4180 kg	9217 lb
	F	1477 kg	3256 lb	1463 kg	3226 lb
299D3 XE (XES & R23)	E	4446 kg	9803 lb	4407 kg	9717 lb
	F	1556 kg	3431 lb	1542 kg	3401 lb

Illustration 124 g06594353

INDUSTRIAL GRAPPLE FORK - TRACKED MODELS

	D	72 in		84 in	
	G	286-9300		286-9301	
	H	467 kg	1030 lb	516 kg	1138 lb
	B	469 mm	18 in	469 mm	18 in
226D3	E	884 kg	1949 lb	842 kg	1857 lb
	F	442 kg	975 lb	421 kg	928 lb
232D3	E	1127 kg	2485 lb	1085 kg	2392 lb
	F	564 kg	1243 lb	543 kg	1196 lb
236D3	E	1105 kg	2437 lb	1063 kg	2344 lb
	F	553 kg	1218 lb	532 kg	1172 lb
242D3	E	1371 kg	3023 lb	1330 kg	2933 lb
	F	686 kg	1512 lb	665 kg	1466 lb
246D3	E	1412 kg	3113 lb	1370 kg	3021 lb
	F	706 kg	1557 lb	685 kg	1510 lb
262D3	E	1876 kg	4137 lb	1834 kg	4044 lb
	F	938 kg	2068 lb	917 kg	2022 lb
272D3	E	2339 kg	5157 lb	2297 kg	5065 lb
	F	1170 kg	2579 lb	1149 kg	2532 lb
272D3 XE	E	2507 kg	5528 lb	2465 kg	5435 lb
	F	1254 kg	2764 lb	1233 kg	2718 lb

Illustration 125 g06458803
INDUSTRIAL GRAPPLE RAKE - WHEELED MODELS

	D	72 in		84 in	
	G	286-9300		286-9301	
	H	467 kg	1030 lb	516 kg	1138 lb
	B	469 mm	18 in	469 mm	18 in
239D3	E	1387 kg	3058 lb	1346 kg	2968 lb
	F	485 kg	1070 lb	471 kg	1039 lb
249D3	E	1607 kg	3543 lb	1566 kg	3453 lb
	F	562 kg	1240 lb	548 kg	1209 lb
257D3	E	1695 kg	3737 lb	1654 kg	3647 lb
	F	593 kg	1308 lb	579 kg	1276 lb
259D3	E	1886 kg	4159 lb	1844 kg	4066 lb
	F	660 kg	1456 lb	645 kg	1423 lb
279D3	E	2257 kg	4977 lb	2215 kg	4884 lb
	F	790 kg	1742 lb	775 kg	1709 lb
289D3	E	2882 kg	6355 lb	2841 kg	6264 lb
	F	1009 kg	2224 lb	994 kg	2193 lb
299D3 (DY9 & P3R)	E	3487 kg	7689 lb	3445 kg	7596 lb
	F	1220 kg	2691 lb	1206 kg	2659 lb
299D3 XE (BX9 & B62)	E	3579 kg	7892 lb	3538 kg	7801 lb
	F	1253 kg	2762 lb	1238 kg	2730 lb
299D3 (CY9 & JX3)	E	4556 kg	10046 lb	4515 kg	9956 lb
	F	1595 kg	3516 lb	1580 kg	3484 lb
299D3 XE (AN9 & GX9)	E	4642 kg	10236 lb	4601 kg	10145 lb
	F	1625 kg	3582 lb	1610 kg	3551 lb
299D3 XE (LB3 & S38)	E	4373 kg	9642 lb	4331 kg	9550 lb
	F	1531 kg	3375 lb	1516 kg	3342 lb
299D3 XE (XES & R23)	E	4607 kg	10158 lb	4566 kg	10068 lb
	F	1612 kg	3555 lb	1598 kg	3524 lb

Illustration 126 g06594413

INDUSTRIAL GRAPPLE RAKE - TRACKED MODELS

Agriculture Tools

Note: In the following tables:

A – Tool Load Limit

B – Number of Spears

D – Spear Length

E – Tipping Load

F – Rated Operating Capacity (ROC)

G – Work Tool Part Number

H – Work Tool Mass

	D	39 in		49 in		39 in		49 in	
	B	1		1		2		2	
	G	475-6074		475-6079		475-6070		475-6080	
	A	907 kg	2000 lb	907 kg	2000 lb	1361 kg	3000 lb	1361 kg	3000 lb
	H	70 kg	154 lb	72 kg	159 lb	125 kg	276 lb	129 kg	284 lb
226D3	E	1044 kg	2302 lb	1041 kg	2295 lb	1088 kg	2399 lb	1084 kg	2390 lb
	F	522 kg	1151 lb	521 kg	1148 lb	544 kg	1200 lb	542 kg	1195 lb
232D3	E	1381 kg	3045 lb	1366 kg	3012 lb	1366 kg	3012 lb	1366 kg	3012 lb
	F	691 kg	1523 lb	683 kg	1506 lb	683 kg	1506 lb	683 kg	1506 lb
236D3	E	1233 kg	2719 lb	1231 kg	2714 lb	1290 kg	2844 lb	1286 kg	2836 lb
	F	617 kg	1359 lb	616 kg	1357 lb	645 kg	1422 lb	643 kg	1418 lb
242D3	E	1439 kg	3173 lb	1437 kg	3169 lb	1519 kg	3349 lb	1515 kg	3341 lb
	F	720 kg	1586 lb	719 kg	1584 lb	760 kg	1675 lb	758 kg	1670 lb
246D3	E	1497 kg	3301 lb	1495 kg	3296 lb	1569 kg	3460 lb	1565 kg	3451 lb
	F	749 kg	1650 lb	748 kg	1648 lb	785 kg	1730 lb	783 kg	1725 lb
262D3	E	1866 kg	4115 lb	1863 kg	4108 lb	1976 kg	4357 lb	1972 kg	4348 lb
	F	907 kg	2000 lb	907 kg	2000 lb	988 kg	2179 lb	986 kg	2174 lb
272D3	E	2249 kg	4959 lb	2247 kg	4955 lb	2390 kg	5270 lb	2385 kg	5259 lb
	F	907 kg	2000 lb	907 kg	2000 lb	1195 kg	2635 lb	1193 kg	2629 lb
272D3 XE	E	2384 kg	5257 lb	2382 kg	5252 lb	2529 kg	5576 lb	2525 kg	5568 lb
	F	907 kg	2000 lb	907 kg	2000 lb	1265 kg	2788 lb	1263 kg	2784 lb

Illustration 127 g06459162

BALE SPEAR - WHEELED MODELS

	D	39 in		49 in		39 in		49 in	
	B	1		1		2		2	
	G	475-6074		475-6079		475-6070		475-6080	
	A	907 kg	2000 lb	907 kg	2000 lb	1361 kg	3000 lb	1361 kg	3000 lb
	H	70 kg	3 in	72 kg	3 in	125 kg	5 in	129 kg	5 in
239D3	E	1442 kg	3180 lb	1440 kg	3175 lb	1554 kg	3427 lb	1550 kg	3418 lb
	F	505 kg	1113 lb	504 kg	1111 lb	544 kg	1199 lb	543 kg	1196 lb
249D3	E	1618 kg	3568 lb	1616 kg	3563 lb	1751 kg	3861 lb	1746 kg	3850 lb
	F	566 kg	1249 lb	566 kg	1247 lb	613 kg	1351 lb	611 kg	1347 lb
257D3	E	1698 kg	3744 lb	1696 kg	3740 lb	1853 kg	4086 lb	1849 kg	4077 lb
	F	594 kg	1310 lb	594 kg	1309 lb	649 kg	1430 lb	647 kg	1427 lb
259D3	E	1851 kg	4081 lb	1849 kg	4077 lb	2021 kg	4456 lb	2016 kg	4445 lb
	F	648 kg	1429 lb	647 kg	1427 lb	707 kg	1560 lb	706 kg	1556 lb
279D3	E	2182 kg	4811 lb	2180 kg	4807 lb	2379 kg	5246 lb	2340 kg	5160 lb
	F	764 kg	1684 lb	763 kg	1682 lb	833 kg	1836 lb	819 kg	1806 lb
289D3	E	2665 kg	5876 lb	2663 kg	5872 lb	2920 kg	6439 lb	2915 kg	6428 lb
	F	907 kg	2000 lb	907 kg	2000 lb	1022 kg	2254 lb	1020 kg	2250 lb
299D3 (DY9 & P3R)	E	3156 kg	6959 lb	3154 kg	6955 lb	3436 kg	7576 lb	3432 kg	7568 lb
	F	907 kg	2000 lb	907 kg	2000 lb	1203 kg	2652 lb	1201 kg	2649 lb
299D3 XE (BX9 & B62)	E	3232 kg	7127 lb	3230 kg	7122 lb	3519 kg	7759 lb	3515 kg	7751 lb
	F	907 kg	2000 lb	907 kg	2000 lb	1232 kg	2716 lb	1230 kg	2713 lb
299D3 (CY9 & JX3)	E	3982 kg	8780 lb	3979 kg	8774 lb	4241 kg	9351 lb	4236 kg	9340 lb
	F	907 kg	2000 lb	907 kg	2000 lb	1361 kg	3000 lb	1361 kg	3000 lb
299D3 XE (AN9 & GX9)	E	4051 kg	8932 lb	4049 kg	8928 lb	4316 kg	9517 lb	4311 kg	9506 lb
	F	907 kg	2000 lb	907 kg	2000 lb	1361 kg	3000 lb	1361 kg	3000 lb
299D3 XE (LB3 & S38)	E	3876 kg	8547 lb	3874 kg	8542 lb	4187 kg	9232 lb	4183 kg	9224 lb
	F	907 kg	2000 lb	907 kg	2000 lb	1361 kg	3000 lb	1361 kg	3000 lb
299D3 XE (XES & R23)	E	4068 kg	8970 lb	4066 kg	8966 lb	4396 kg	9693 lb	4391 kg	9682 lb
	F	907 kg	2000 lb	907 kg	2000 lb	1361 kg	3000 lb	1361 kg	3000 lb

Illustration 128 g06594423

BALE SPEAR - TRACKED MODELS

	D	71 in		84 in	
	G	477-9896		489-0075	
	A	1089 kg	2400 lb	1089 kg	2400 lb
	H	227 kg	501 lb	250 kg	551 lb
226D3	E	829 kg	1828 lb	732 kg	1614 lb
	F	415 kg	914 lb	366 kg	807 lb
232D3	E	1381 kg	3045 lb	1366 kg	3012 lb
	F	691 kg	1523 lb	683 kg	1506 lb
236D3	E	1004 kg	2214 lb	891 kg	1965 lb
	F	502 kg	1107 lb	446 kg	982 lb
242D3	E	1189 kg	2622 lb	1055 kg	2326 lb
	F	595 kg	1311 lb	528 kg	1163 lb
246D3	E	1248 kg	2752 lb	1115 kg	2459 lb
	F	624 kg	1376 lb	558 kg	1229 lb
262D3	E	1577 kg	3477 lb	1407 kg	3102 lb
	F	789 kg	1739 lb	704 kg	1551 lb
272D3	E	1924 kg	4242 lb	1719 kg	3790 lb
	F	962 kg	2121 lb	860 kg	1895 lb
272D3 XE	E	2041 kg	4500 lb	1823 kg	4020 lb
	F	1021 kg	2250 lb	912 kg	2010 lb

Illustration 129 g06459219
BALE GRAB - WHEELED MODELS

	D	71 in		84 in	
	G	477-9896		489-0075	
	A	1089 kg	2400 lb	1089 kg	2400 lb
	H	227 kg	9 in	250 kg	10 in
239D3	E	1198 kg	2642 lb	1064 kg	2346 lb
	F	419 kg	925 lb	372 kg	821 lb
249D3	E	1357 kg	2992 lb	1206 kg	2659 lb
	F	475 kg	1047 lb	422 kg	931 lb
257D3	E	1439 kg	3173 lb	1284 kg	2831 lb
	F	504 kg	1111 lb	449 kg	991 lb
259D3	E	1576 kg	3475 lb	1406 kg	3100 lb
	F	552 kg	1216 lb	492 kg	1085 lb
279D3	E	1855 kg	4090 lb	1667 kg	3676 lb
	F	649 kg	1432 lb	583 kg	1287 lb
289D3	E	2315 kg	5105 lb	2070 kg	4564 lb
	F	810 kg	1787 lb	725 kg	1598 lb
299D3 (DY9 & P3R)	E	2749 kg	6062 lb	2456 kg	5415 lb
	F	962 kg	2122 lb	860 kg	1895 lb
299D3 XE (BX9 & B62)	E	2818 kg	6214 lb	2518 kg	5552 lb
	F	986 kg	2175 lb	881 kg	1943 lb
299D3 (CY9 & JX3)	E	3436 kg	7576 lb	3043 kg	6710 lb
	F	1089 kg	2400 lb	1065 kg	2348 lb
299D3 XE (AN9 & GX9)	E	3497 kg	7711 lb	3099 kg	6833 lb
	F	1089 kg	2400 lb	1085 kg	2392 lb
299D3 XE (LB3 & S38)	E	3384 kg	7462 lb	3020 kg	6659 lb
	F	1089 kg	2400 lb	1057 kg	2331 lb
299D3 XE (XES & R23)	E	3557 kg	7843 lb	3175 kg	7001 lb
	F	1089 kg	2400 lb	1089 kg	2400 lb

Illustration 130 g06594430

BALE GRAB - TRACKED MODELS

Rated Load with a Material Handling Arm

WARNING

Failure to comply to the rated load can cause possible personal injury or property damage. This includes the risk of unintended boom lowering. Review the rated load of a particular work tool before performing any operation. Make adjustments to the rated load as necessary for non-standard configurations.

Note: Rated loads should be used as a guide. Attachments, uneven ground conditions, soft ground conditions, or poor ground conditions have effects on rated loads. The operator is responsible for being aware of these effects.

The maximum placement height (ground line to the chain hook) and maximum reach (front of machine to the chain hook) are given for the highest position of the material handling arm.

The rated operating capacity (ROC) is defined by “ISO 14397-1:2007” and “EN 474-3:2006+a1:2009+” as the least amount of weight of the following conditions:

- 50% of the full static tipping load for wheeled machines
- 35% of the full static tipping load for track machines
- A working load limit of 907 kg (2000 lb)
- The lifting capacity to maximum height

Note: The static test coefficient per EU directive “2006/42/EC” exceeded 1.25 times the working load limit that is marked on the device. Always select properly sized lifting accessories. Always inspect the lifting accessories.

The following tables provide the rated operating loads for the standard machine configuration that is equipped with the following items:

- 10 x 16.5 tires on 226D3, and 232D3 machines.
- 12 x 16.5 tires on 236D3, 242D3, 246D3, 262D3, 272D3 machines.
- 14 x 17.5 tires on 272D3 XE machines.
- lubricants
- full fuel tank
- 75 kg (165 lb) operator
- Cat Material Handling Arm
- Undercarriage with 320 mm (12.6 inch) wide tracks and dual flange front/single flange rear idlers on 239D3, 249D3, and 259D3 machines.
- Undercarriages with either 400 mm (15.75 inch) or 450 mm (17.72 inch) wide tracks and triple flange front/rear idlers on 279D3, and 289D3 machines.
- Undercarriages with 450 mm (17.72 inch) wide tracks and dual flange front/single flange rear idlers on 299D3 machines.
- Undercarriages with 400 mm (15.75 inch) wide tracks and triple flange front/rear idlers on 299D3 XE machines.

Note: All Caterpillar Premium Conventional tires are at the suggested operating inflation pressure. Refer to the Operation and Maintenance Manual, “Tire Inflation - Check” for the proper tire inflation pressure.

Illustration 131 g06399867

Lifting point 1 (1)

Lifting point 2 (2)

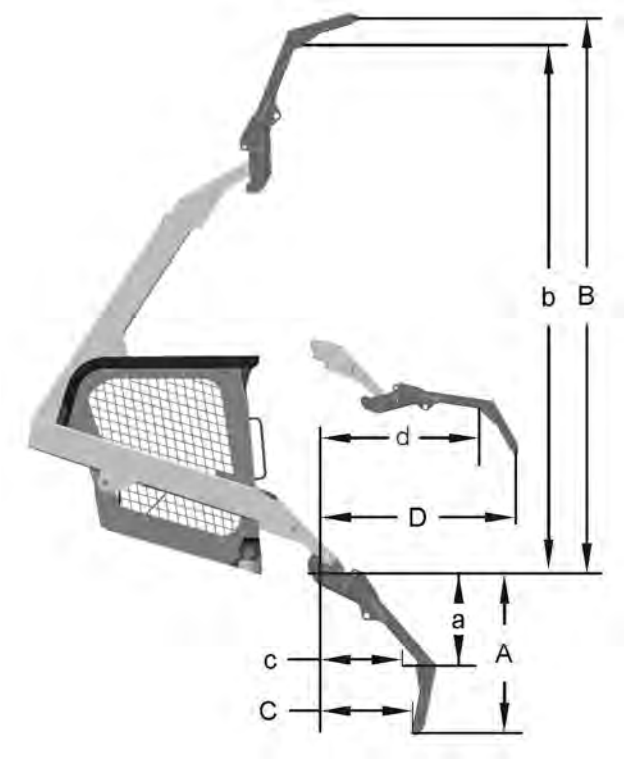

Illustration 132 g06399870

a – Clearance at the Full Down Position from Lifting Point 1

A – Clearance at the Full Down Position from Lifting Point 2

b – Clearance at Maximum Height Position from Lifting Point 1

B – Clearance at Maximum Height Position from Lifting Point 2

c – Minimum Reach From Lifting Point 1

C – Minimum Reach From Lifting Point 2

d – Maximum Reach From Lifting Point 1

D – Maximum Reach From Lifting Point 2

E – Tipping Load

F – Rated Operating Capacity

G – Work Tool Part Number

H – Work Tool Mass

		Point 1		Point 2	
	G	216-8756			
	H	131 kg		289 lb	
226D3	E	850 kg	1874 lb	702 kg	1548 lb
	F	425 kg	937 lb	351 kg	774 lb
	a/A	-914 mm	-36 in	-1407 mm	-55 in
	b/B	4023 mm	158 in	4468 mm	176 in
	c/C	499 mm	20 in	379 mm	15 in
	d/D	1659 mm	65 in	2102 mm	83 in
232D3	E	1022 kg	2254 lb	845 kg	1863 lb
	F	511 kg	1127 lb	422 kg	931 lb
	a/A	-914 mm	-36 in	-1408 mm	-55 in
	b/B	4204 mm	166 in	4649 mm	183 in
	c/C	505 mm	20 in	388 mm	15 in
	d/D	1619 mm	64 in	2062 mm	81 in
236D3	E	1018 kg	2245 lb	845 kg	1863 lb
	F	509 kg	1122 lb	422 kg	931 lb
	a/A	-993 mm	-39 in	-1471 mm	-58 in
	b/B	4337 mm	171 in	4784 mm	188 in
	c/C	437 mm	17 in	267 mm	11 in
	d/D	1707 mm	67 in	2151 mm	85 in
242D3	E	1193 kg	2631 lb	984 kg	2170 lb
	F	596 kg	1314 lb	492 kg	1085 lb
	a/A	-987 mm	-39 in	-1463 mm	-58 in
	b/B	4293 mm	169 in	4740 mm	187 in
	c/C	386 mm	15 in	209 mm	8 in
	d/D	1602 mm	63 in	2047 mm	81 in

Illustration 133 g06459231
MATERIAL HANDLING ARM - WHEELED MODELS

		Point 1		Point 2	
	G	216-8756			
	H	131 kg		289 lb	
246D3	E	1256 kg	2769 lb	1048 kg	2311 lb
	F	628 kg	1385 lb	524 kg	1155 lb
	a/A	-947 mm	-37 in	-1444 mm	-57 in
	b/B	4375 mm	172 in	4823 mm	190 in
	c/C	553 mm	22 in	444 mm	17 in
	d/D	1754 mm	69 in	2199 mm	87 in
262D3	E	1569 kg	3460 lb	1299 kg	2864 lb
	F	784 kg	1729 lb	650 kg	1433 lb
	a/A	-943 mm	-37 in	-1440 mm	-57 in
	b/B	4397 mm	173 in	4845 mm	191 in
	c/C	559 mm	22 in	451 mm	18 in
	d/D	1644 mm	65 in	2089 mm	82 in
272D3	E	1901 kg	4192 lb	1574 kg	3471 lb
	F	907 kg	2000 lb	787 kg	1735 lb
	a/A	-942 mm	-37 in	-1441 mm	-57 in
	b/B	4455 mm	175 in	4901 mm	193 in
	c/C	593 mm	23 in	493 mm	19 in
	d/D	1650 mm	65 in	2095 mm	82 in
272D3 XE	E	2008 kg	4428 lb	1660 kg	3660 lb
	F	907 kg	2000 lb	830 kg	1830 lb
	a/A	-945 mm	-37 in	-1441 mm	-57 in
	b/B	4492 mm	177 in	4939 mm	194 in
	c/C	522 mm	21 in	414 mm	16 in
	d/D	1614 mm	64 in	2060 mm	81 in

Illustration 134 g06459292

MATERIAL HANDLING ARM - WHEELED MODELS (CONT.)

		Point 1		Point 2	
	G	216-8756			
	H	131 kg		289 lb	
239D3	E	1213 kg	2675 lb	1002 kg	2209 lb
	F	425 kg	937 lb	351 kg	774 lb
	a/A	-958 mm	-38 in	-1441 mm	-57 in
	b/B	4007 mm	158 in	4452 mm	175 in
	c/C	459 mm	18 in	300 mm	12 in
	d/D	1326 mm	52 in	1769 mm	70 in
249D3	E	1366 kg	3012 lb	1126 kg	2483 lb
	F	478 kg	1054 lb	394 kg	869 lb
	a/A	-922 mm	-36 in	-1415 mm	-56 in
	b/B	4198 mm	165 in	4643 mm	183 in
	c/C	536 mm	21 in	410 mm	16 in
	d/D	1324 mm	52 in	1767 mm	70 in
257D3	E	1457 kg	3213 lb	1207 kg	2661 lb
	F	510 kg	1125 lb	422 kg	931 lb
	a/A	-1010 mm	-40 in	-1480 mm	-58 in
	b/B	4154 mm	164 in	4402 mm	173 in
	c/C	417 mm	16 in	223 mm	9 in
	d/D	1390 mm	55 in	1834 mm	72 in
259D3	E	1587 kg	3499 lb	1312 kg	2893 lb
	F	556 kg	1226 lb	459 kg	1012 lb
	a/A	-1008 mm	-40 in	-1480 mm	-58 in
	b/B	3877 mm	153 in	3944 mm	155 in
	c/C	400 mm	16 in	212 mm	8 in
	d/D	1679 mm	66 in	2123 mm	84 in
279D3	E	1873 kg	4130 lb	1563 kg	3446 lb
	F	656 kg	1446 lb	547 kg	1206 lb
	a/A	-1006 mm	-40 in	-1495 mm	-59 in
	b/B	4353 mm	171 in	4801 mm	189 in
	c/C	436 mm	17 in	301 mm	12 in
	d/D	1275 mm	50 in	1721 mm	68 in
289D3	E	2303 kg	5078 lb	1901 kg	4192 lb
	F	806 kg	1777 lb	665 kg	1466 lb
	a/A	-1011 mm	-40 in	-1501 mm	-59 in
	b/B	4354 mm	171 in	4802 mm	189 in
	c/C	450 mm	18 in	318 mm	13 in
	d/D	1282 mm	50 in	1728 mm	68 in

Illustration 135 g06459299

MATERIAL HANDLING ARM - TRACKED MODELS

		Point 1		Point 2	
	G	216-8756			
	H	131 kg		289 lb	
299D3 (DY9 & P3R)	E	2709 kg	5973 lb	2231 kg	4919 lb
	F	907 kg	2000 lb	781 kg	1722 lb
	a/A	-992 mm	-39 in	-1485 mm	-58 in
	b/B	4445 mm	175 in	4892 mm	193 in
	c/C	497 mm	20 in	373 mm	15 in
	d/D	1312 mm	52 in	1757 mm	69 in
299D3 XE (BX9 & B62)	E	2775 kg	6119 lb	2285 kg	5038 lb
	F	907 kg	2000 lb	800 kg	1764 lb
	a/A	-994 mm	-39 in	-1486 mm	-59 in
	b/B	4443 mm	175 in	4891 mm	193 in
	c/C	496 mm	20 in	371 mm	15 in
	d/D	1677 mm	66 in	2123 mm	84 in
299D3 (CY9 & JX3)	E	3305 kg	7288 lb	2685 kg	5920 lb
	F	907 kg	2000 lb	907 kg	2000 lb
	a/A	-992 mm	-39 in	-1484 mm	-58 in
	b/B	4445 mm	175 in	4893 mm	193 in
	c/C	503 mm	20 in	378 mm	15 in
	d/D	1681 mm	66 in	2127 mm	84 in
299D3 XE (AN9 & GX9)	E	3364 kg	7418 lb	2733 kg	6026 lb
	F	907 kg	2000 lb	907 kg	2000 lb
	a/A	-992 mm	-39 in	-1484 mm	-58 in
	b/B	4445 mm	175 in	4893 mm	193 in
	c/C	503 mm	20 in	378 mm	15 in
	d/D	1681 mm	66 in	2127 mm	84 in
299D3 XE (LB3 & S38)	E	3301 kg	7279 lb	2710 kg	5976 lb
	F	907 kg	2000 lb	907 kg	2000 lb
	a/A	-988 mm	-39 in	-1481 mm	-58 in
	b/B	4448 mm	175 in	4896 mm	193 in
	c/C	502 mm	20 in	378 mm	15 in
	d/D	1313 mm	52 in	1759 mm	69 in
299D3 XE (XES & R23)	E	3466 kg	7643 lb	2846 kg	6275 lb
	F	907 kg	2000 lb	907 kg	2000 lb
	a/A	-989 mm	-39 in	-1482 mm	-58 in
	b/B	4447 mm	175 in	4895 mm	193 in
	c/C	501 mm	20 in	377 mm	15 in
	d/D	1314 mm	52 in	1759 mm	69 in

Illustration 136 g06594500

MATERIAL HANDLING ARM - TRACKED MODELS (CONT.)

i07835120

Specifications

SMCS Code: 7000

Intended Use

This machine is classified as a Skid Steer Loader with wheels or tracks as described in “EN ISO 6165:2012”. This machine normally has a front mounted bucket or another work tool for the principle intended functions of digging, loading, lifting, carrying, and moving material such as earth, crushed rock, gravel, or agricultural products.

Application/Configuration Restrictions

Refer to Operation and Maintenance Manual, “Machine Data” below for information about maximum machine weight.

Refer to Operation and Maintenance Manual, “Caterpillar Approved Work Tools” for information about acceptable work tools.

Lift arm height restrictions will be found in the Operation and Maintenance Manual for the appropriate work tool.

The maximum fore and aft slope for proper lubrication is 25 degrees continuous and 35 degrees intermittent. Intermittent time is 2 minutes.

This machine is approved for use in environments with no explosive gases.

Expected Life

The expected life, defined as total machine hours, of this machine is dependent upon many factors including the machine owner’s desire to rebuild the machine back to factory specifications. The expected life interval of this machine is 8,000 service hours. The expected life interval corresponds to the service hours to engine overhaul or replacement. Service hours to engine overhaul or replacement may vary based on overall machine duty cycle. At the expected life interval, remove the machine from operation and consult your Cat dealer for inspect, repair, rebuild, install remanufactured, install new components, or disposal options and to establish a new expected life interval. If a decision is made to remove this machine from service, refer to Operation and Maintenance Manual, “Decommissioning and Disposal”.

The following items are required to obtain an economical expected life of this machine:

- Perform regular preventive maintenance procedures as described in the Operation and Maintenance Manual.
- Perform machine inspections as described in the Operation and Maintenance Manual and correct any problems discovered.
- Perform system testing as described in the Operation and Maintenance Manual and correct any problems discovered.
- Ensure that machine application conditions comply with Caterpillar’s recommendations.
- Ensure that the operating weight does not exceed limits set by manufacturer.
- Ensure that all frame cracks are identified, inspected, and repaired to prevent further development.

Machine Data

The specifications that are given herein describe the machine as the machine is manufactured by Caterpillar Inc. The machine is full of fluids. The machine is equipped with all options. The weight does not include the operator, work tools, or other attachments.

Table 8

Sales Model	Maximum Machine Weight	Length	Width	Height
226D3	2665 kg	2524 mm	1497 mm	2028 mm
	5875 lb	99 in	59 in	80 in
232D3	2989 kg	2523 mm	1497 mm	2029 mm
	6589 lb	99 in	59 in	80 in
236D3	3544 kg	2792 mm	1676 mm	2120 mm
	7814 lb	110 in	66 in	83 in
239D3	3543 kg	2522 mm	1756 mm	2034 mm
	7811 lb	99 in	69 in	80 in
242D3	3616 kg	2792 mm	1676 mm	2120 mm
	7973 lb	110 in	66 in	83 in
246D3	4005 kg	3000 mm	1829 mm	2120 mm
	8828 lb	118 in	72 in	83 in
249D3	3723 kg	2523 mm	1756 mm	2039 mm
	8207 lb	99 in	69 in	80 in
257D3	3775 kg	2721 mm	1676 mm	2120 mm
	8322 lb	107 in	66 in	83 in
259D3	4271 kg	2780 mm	1676 mm	2120 mm
	9416 lb	109 in	66 in	83 in
262D3	4232 kg	3000 mm	1829 mm	2120 mm

(continued)

(Table 8, contd)

	9329 lb	118 in	72 in	83 in
272D3	4459 kg	2967 mm	1829 mm	2120 mm
	9830 lb	117 in	72 in	83 in
272D3 XE	4646 kg	2967 mm	1930 mm	2120 mm
	10242 lb	117 in	76 in	83 in
279D3	4646 kg	2967 mm	1981 mm	2120 mm
	10242 lb	117 in	78 in	83 in
289D3	4871 kg	2974 mm	1981 mm	2120 mm
	10738 lb	117 in	78 in	83 in
299D3	4684 kg	2974 mm	1981 mm	2120 mm
	10326 lb	117 in	78 in	83 in
299D3 w/ Steel Track	5334 kg	3136 mm	1981 mm	2127 mm
	11759 lb	123 in	78 in	84 in
299D3 XE	4871 kg	2974 mm	1981 mm	2120 mm
	10738 lb	117 in	78 in	83 in
299D3 XE w/Steel Track	5337 kg	3136 mm	1931 mm	2127 mm
	11765 lb	123 in	76 in	84 in
299D3 XE Land Management	5695 kg	3189 mm	1981 mm	2125 mm
	12554 lb	126 in	78 in	84 in
299D3 XE Land Management w/Steel Track	6080 kg	3189 mm	1881 mm	2125 mm
	13403 lb	126 in	74 in	84 in

Identification Information

i09765891

Plate Locations and Film Locations

SMCS Code: 1000; 7000

The Product Identification Number (PIN) will be used to identify a powered machine that is designed for an operator to ride.

Serial Numbers will be used to identify engines, transmissions, and major attachments.

For quick reference, record the identification numbers in the spaces that are provided below the illustration.

Product Identification Number (PIN) Plate

The Product Identification Number (PIN) will be used to identify a powered machine that is designed for an operator to ride.

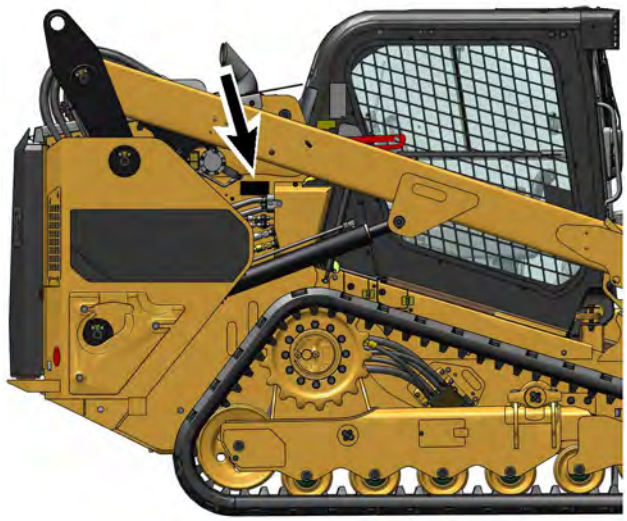

Illustration 137 g06702502

PIN plate location

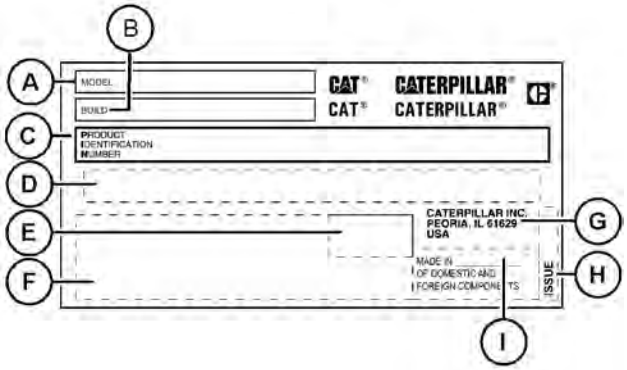

Illustration 138 g06201159

PIN plate

Model (A) _____

Build (B) _____

Product Identification Number (C) _____

Bar Code (D) _____

Month and/or Year of Manufacture Plate (If Required) (E) _____

Regional Certification Plate (If Required) (F) _____

Address of Manufacturer (G) _____

Issue (H) _____

Country of Origin Info Plate (If Required) (I) _____

Local regulation may require documentation of the Month and/or Year of Manufacture in the Operation and Maintenance Manual. Comply with these regulations.

Engine Serial Number Plate

The engine serial number plate is on the top of the engine.

For quick reference, record the identification numbers in the space that is provided below.

Engine Serial Number _____

Regional Product Marking (If Equipped)

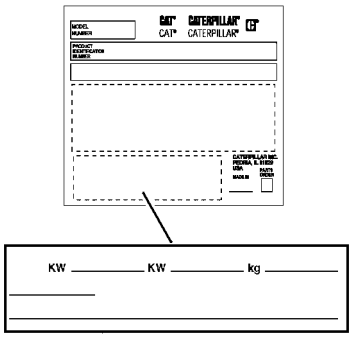

Illustration 139 g06650998

Regional marking plate

This plate is positioned on the bottom-left side of the PIN plate or near the PIN plate.

Note: The regional marking plate or plates are installed on machines that meet the applicable requirements that were effective then and may differ from the one shown above.

Regional product marking may include one or more of the following:

CE mark

UKCA mark

EAC mark

Gulf Standardization Organization (GSO) mark

Ukraine mark

The following information may be stamped onto the regional product marking plate. For quick reference, record this information in the spaces that are provided below:

- Engine Power Primary Engine (kW)_____
- Engine Power for Additional Engine (If Equipped)_____
- Typical Machine Operating Weight (kg)_____
- Month and/or Year of Manufacture_____
- Machine Type_____

Eurasian Economic Union

Manufacturer Information

Manufacturer:

Caterpillar Inc.,
100 N.E. Adams Street
Peoria, Illinois 61629, USA

Entity authorized by the manufacturer at the territory of Eurasian Economic Union:

CATERPILLAR CENTRAL ASIA LLP
Kunaev Str., 77, Almaty
Medeu district 050000, Republic of Kazakhstan

Manufacturer Information

Manufacturer:

Caterpillar Inc.,
100 N.E. Adams Street
Peoria, Illinois 61629, USA

Entity authorized by the manufacturer at the territory of Eurasian Economic Union:

Caterpillar Eurasia LLC
75, Sadovnicheskaya Emb.
Moscow 115035, Russia

Electromagnetic Emissions for Canada

Note: For machines destined for the Canadian Market, the following label is located next to the Machine PIN Plate.

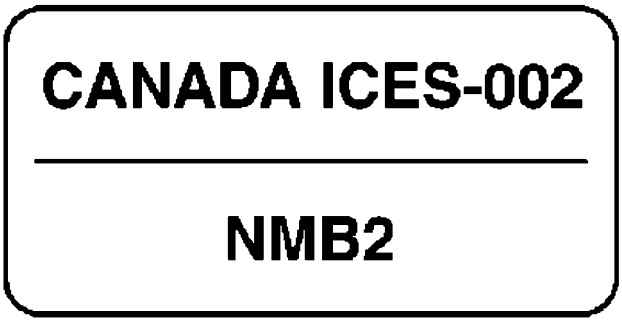

Illustration 140 g06063443

This label verifies that the product meets the requirements of ICES-002 Issue 6. Compliance to ICES-002 Issue 6 is accomplished by meeting electromagnetic emissions industry standard CISPR-12.

Sound Certification

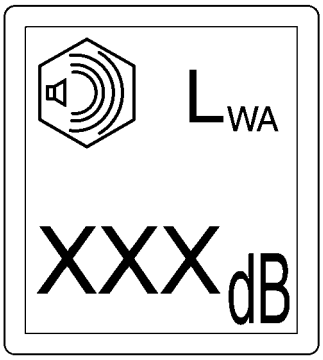

Illustration 141 g06675270
Sound certification film

A typical example of this film is shown.

A certification film is used to verify the environmental sound certification on machines that are certified to the regional requirements. A film installed on your machine will have a value. The value that is listed on the film indicates the guaranteed exterior sound power level (L_{wa}) at the time of manufacture for the conditions that are specified in the following sound test procedures:

- “ISO 6395:1988”
- European Union “2000/14/EC” amended by “2005/88/EC”
- United Kingdom “2001 No. 1701” amended by “2005 No. 3525”

i07545258

Emissions Certification Film

SMCS Code: 1000; 7000; 7405

Certification Label for Emissions

Note: This information is pertinent in the United States, in Canada, and in Europe.

Consult your Cat dealer for an Emission Control Warranty Statement.

This label is on the engine valve cover.

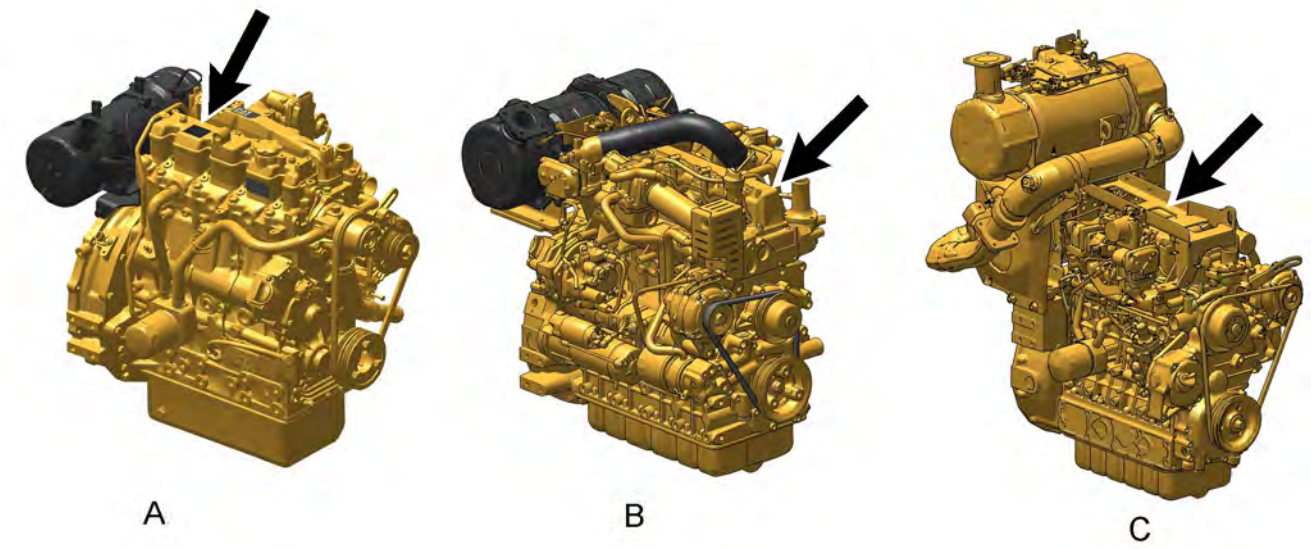

Illustration 142 g06355568

(A) C2.2 (B) C3.3B (C) C3.8

Declaration of Conformity
(European Union)

SMCS Code: 1000; 7000

S/N: JX31–Up

S/N: R231–Up

S/N: AN91–Up

S/N: CY91–Up

S/N: GX91–Up

S/N: XES1–Up

Table 9

An EU Declaration of Conformity document was provided with the machine if it was manufactured to comply with specific requirements for the European Union. In order to determine the details of the applicable Directives, review the complete EU Declaration of Conformity provided with the machine. The extract shown below from an EU Declaration of Conformity for machines that are declared compliant to “2006/42/EC” applies only to those machines originally “CE” marked by the manufacturer listed and which have not since been modified.

Original EU DECLARATION OF CONFORMITY

Manufacturer: Caterpillar Inc., 100 N.E. Adams Street, Peoria, Illinois 61629, USA

Person authorized to compile the Technical File and to communicate relevant part (s) of the Technical File to the Authorities of European Union Member States on request:

Standards & Regulations Manager, Caterpillar France S.A.S
40 Avenue Leon-Blum 38000 Grenoble, France

I, the undersigned, _____, hereby certify that the construction equipment specified hereunder

Description:	Generic Denomination:	Earth moving Equipment
	Function:	Steel Tracked Loader
	Model/Type:	299D3 and 299D3 XE Compact Track Loader
	Serial Number:	
	Commercial Name:	Caterpillar

Fulfills all the relevant provisions of the following Directives

Directives	Notified Body	Document No.
2006/42/EC	N/A	
2000/14/EC amended by 2005/88/EC, Note (1)		
2014/30/EU	N/A	

Note (1) Schedule -_____ Guaranteed Sound Power Level -____dB (A)
Representative Equipment Type Sound Power Level - ____dB (A)
Engine Power per ____-____ kW Rated engine speed - ____ rpm
Technical Documentation accessible through person listed above authorized to compile the Technical File

Done at: **Signature**

Date: **Name/Position**

Note: The above information was correct as of August 2021, but may be subject to change, please refer to the individual declaration of conformity issued with the machine for exact details.

Declaration of Conformity
(European Union)

SMCS Code: 1000; 7000

S/N: B621–Up

S/N: LB31–Up

S/N: WS51–Up

S/N: EP71–Up

S/N: S381–Up

S/N: BT91–Up

S/N: BX91–Up

S/N: CW91–Up

S/N: DY91–Up

S/N: EP91–Up

S/N: HC91–Up

S/N: JX91–Up

S/N: KE91–Up

S/N: KX91–Up

S/N: LA91–Up

S/N: MC91–Up

S/N: RB91–Up

S/N: SZ91–Up

S/N: TB91–Up

S/N: TE91–Up

S/N: P9C1–Up

S/N: WKD1–Up

S/N: R9E1–Up

S/N: Z9E1–Up

S/N: RWK1–Up

S/N: P3R1–Up

S/N: K5S1–Up

S/N: TLS1–Up

Table 10

An EU Declaration of Conformity document was provided with the machine if it was manufactured to comply with specific requirements for the European Union. In order to determine the details of the applicable Directives, review the complete EU Declaration of Conformity provided with the machine. The extract shown below from an EU Declaration of Conformity for machines that are declared compliant to “2006/42/EC” applies only to those machines originally “CE” marked by the manufacturer listed and which have not since been modified.

Original EU DECLARATION OF CONFORMITY OF MACHINERY

Manufacturer: Caterpillar Inc., 100 N.E. Adams Street, Peoria, Illinois 61629, USA

Person authorized to compile the Technical File and to communicate relevant part (s) of the Technical File to the Authorities of European Union Member States on request:

Standards & Regulations Manager, Caterpillar France S.A.S
40 Avenue Leon-Blum 38000 Grenoble, France

I, the undersigned, _____, hereby certify that the construction equipment specified hereunder

Description:	Generic Denomination:	Earth moving Equipment
	Function:	Rubber Tracked Loader
	Model/Type:	239D3,249D3,259D3,279D3,289D3,299D3,299D3 XE Compact Track Loader
	Serial Number:	
	Commercial Name:	Caterpillar

Fulfills all the relevant provisions of the following Directives

Directives	Notified Body	Document No.
2006/42/EC	N/A	
2000/14/EC amended by 2005/88/EC, Note (1)		
2014/30/EU	N/A	

Note (1) Schedule -_____ Guaranteed Sound Power Level -____dB (A)
Representative Equipment Type Sound Power Level - ____dB (A)
Engine Power per ____-____ kW Rated engine speed - ____ rpm
Technical Documentation accessible through person listed above authorized to compile the Technical File

Done at: **Signature**

Date: **Name/Position**

Note: The above information was correct as of August 2021, but may be subject to change, please refer to the individual Declaration of Conformity issued with the machine for exact details.

Declaration of Conformity

(European Union)

SMCS Code: 1000; 7000

S/N: BT21–Up

S/N: GJ21–Up

S/N: HX21–Up

S/N: L321–Up

S/N: ZB21–Up

S/N: EP31–Up

S/N: TP31–Up

S/N: TY31–Up

S/N: TP41–Up

S/N: TY41–Up

S/N: EK51–Up

S/N: GJ51–Up

S/N: AH61–Up

S/N: AZ61–Up

S/N: GK61–Up

S/N: GM61–Up

S/N: KC61–Up

S/N: ME61–Up

S/N: PF61–Up

S/N: TP61–Up

S/N: TY61–Up

S/N: TC71–Up

S/N: TM71–Up

S/N: TP71–Up

S/N: DX81–Up

S/N: EP81–Up

S/N: TP91–Up

S/N: T8A1–Up

S/N: F9C1–Up

S/N: W6E1–Up

S/N: MXJ1–Up

S/N: KXL1–Up

S/N: NXL1–Up

S/N: R2L1–Up

S/N: S1L1–Up

S/N: PWN1–Up

S/N: D5R1–Up

S/N: HRS1–Up

Table 11

An EU Declaration of Conformity document was provided with the machine if it was manufactured to comply with specific requirements for the European Union. In order to determine the details of the applicable Directives, review the complete EU Declaration of Conformity provided with the machine. The extract shown below from an EU Declaration of Conformity for machines that are declared compliant to “2006/42/EC” applies only to those machines originally “CE” marked by the manufacturer listed and which have not since been modified.

Original EU DECLARATION OF CONFORMITY

Manufacturer: Caterpillar Inc., 100 N.E. Adams Street, Peoria, Illinois 61629, USA

Person authorized to compile the Technical File and to communicate relevant part (s) of the Technical File to the Authorities of European Union Member States on request:

Standards & Regulations Manager, Caterpillar France S.A.S
40 Avenue Leon-Blum 38000 Grenoble, France

I, the undersigned, _____, hereby certify that the construction equipment specified hereunder

Description:	Generic Denomination:	Earth-moving Equipment
	Function:	Wheeled Loader
	Model/Type:	226D3,232D3,236D3,242D3,246D3,262D3,272D3,272D3 XE Skid Steer Loader
	Serial Number:	
	Commercial Name:	Caterpillar

Fulfills all the relevant provisions of the following Directives

Directives	Notified Body	Document No.
2006/42/EC	N/A	
2000/14/EC amended by 2005/88/EC, Note (1)	A V Technology Ltd.	
2014/30/EU	N/A	

Note (1) Schedule VI____ Guaranteed Sound Power Level -____dB (A)
Representative Equipment Type Sound Power Level - ____dB (A)
Engine Power per ____-____ kW Rated engine speed - ____ rpm
Technical Documentation accessible through person listed above authorized to compile the Technical File

Done at: **Signature**

Date: **Name/Position**

Note: The above information was correct as of August 2021, but may be subject to change, please refer to the individual declaration of conformity issued with the machine for exact details.

Declaration of Conformity
(European Union)

SMCS Code: 1000; 7000

S/N: LM71–Up

S/N: FMA1–Up

S/N: S7E1–Up

S/N: KEZ1–Up

Table 12

An EU Declaration of Conformity document was provided with the machine if it was manufactured to comply with specific requirements for the European Union. In order to determine the details of the applicable Directives, review the complete EU Declaration of Conformity provided with the machine. The extract shown below from an EU Declaration of Conformity for machines that are declared compliant to “2006/42/EC” applies only to those machines originally “CE” marked by the manufacturer listed and which have not since been modified.

Original EU DECLARATION OF CONFORMITY

Manufacturer: Caterpillar Inc., 100 N.E. Adams Street, Peoria, Illinois 61629, USA

Person authorized to compile the Technical File and to communicate relevant parts of the Technical File to the Authorities of European Union Member States on request:

Standards & Regulations Manager, Caterpillar France S.A.S
40 Avenue Leon-Blum 38000 Grenoble, France

I, the undersigned, _____, hereby certify that the construction equipment specified hereunder

Description:	Generic Denomination:	Earth moving Equipment
	Function:	Rubber Tracked Loader
	Model/Type:	257D3 Multi-Terrain Loader
	Serial Number:	
	Commercial Name:	Caterpillar

Fulfills all the relevant provisions of the following Directives

Directives	Notified Body	Document No.
2006/42/EC	N/A	
2000/14/EC amended by 2005/88/EC, Note (1)		
2014/30/EU	N/A	

Note (1) Schedule -_____ Guaranteed Sound Power Level -____dB (A)
Representative Equipment Type Sound Power Level - ____dB (A)
Engine Power per ____-____ kW Rated engine speed - ____ rpm
Technical Documentation accessible through person listed above authorized to compile the Technical File

Done at: **Signature**

Date: **Name/Position**

Note: The above information was correct as of August 2021, but may be subject to change, refer to the individual Declaration of Conformity issued with the machine for exact details.

Declaration of Conformity
(Great Britain)

SMCS Code: 1000; 7000

S/N: JX31–Up

S/N: R231–Up

S/N: GX91–Up

Table 13

A Declaration of Conformity document was provided with the machine if it was manufactured to comply with specific requirements for the Great Britain. In order to determine the details of the applicable legislation, review the complete Declaration of Conformity provided with the machine. The extract shown below from a Great Britain Declaration of Conformity for machines that are declared compliant to 2008 No. 1597 applies only to those machines originally “UKCA” marked by the manufacturer listed and which have not since been modified.

DECLARATION OF CONFORMITY

Manufacturer: Caterpillar Inc., 100 N.E. Adams Street, Peoria, Illinois 61629, USA

Person authorized to compile the Technical File and to communicate relevant part (s) of the Technical File to the Authorities on request:

Standards & Regulations Manager Caterpillar France SAS
40 Avenue Leon-Blum 38000 Grenoble, France

I, the undersigned, _____, hereby certify that the construction equipment specified hereunder

Description:	Generic Denomination:	Earth - moving Equipment
	Function:	Steel Track Loader
	Model/Type:	299D3 and 299D3 XE Compact Track Loader
	Serial Number:	
	Commercial Name:	Caterpillar

Fulfills all the relevant provisions of these regulations and/or other enactments as listed below:

Legislation	Approved Body	Document No.
2008 No. 1597		
2016 No. 1091		
2001 No. 1701 amended by 2005 No. 3525, Note (1)	Note (2)	

Note (1) Schedule -_____ Guaranteed Sound Power Level -_____dB (A)
Representative Equipment Type Sound Power Level - _____dB (A)
Engine Power per ____-____ kW Rated engine speed - _____ rpm
Technical Documentation accessible through person listed above authorized to compile the Technical File

Note (2) If applicable, information related to Approved Body.

Done at: **Signature**

Date: **Name/Position**

Note: The above information was correct as of July 2021, but may be subject to change, please refer to the individual declaration of conformity issued with the machine for exact details.

Declaration of Conformity
(Great Britain)

SMCS Code: 1000; 7000

S/N: B621–Up

S/N: WS51–Up

S/N: S381–Up

S/N: BT91–Up

S/N: TE91–Up

S/N: WKD1–Up

S/N: Z9E1–Up

S/N: RWK1–Up

S/N: P3R1–Up

S/N: K5S1–Up

Table 14

A Declaration of Conformity document was provided with the machine if it was manufactured to comply with specific requirements for the Great Britain. In order to determine the details of the applicable legislation, review the complete Declaration of Conformity provided with the machine. The extract shown below from a Great Britain Declaration of Conformity for machines that are declared compliant to 2008 No. 1597 applies only to those machines originally “UKCA” marked by the manufacturer listed and which have not since been modified.

DECLARATION OF CONFORMITY

Manufacturer: Caterpillar Inc., 100 N.E. Adams Street, Peoria, Illinois 61629, USA

Person authorized to compile the Technical File and to communicate relevant part (s) of the Technical File to the Authorities on request:

Standards & Regulations Manager Caterpillar France SAS
40 Avenue Leon-Blum 38000 Grenoble, France

I, the undersigned, _____, hereby certify that the construction equipment specified hereunder

Description:	Generic Denomination:	Earth - moving Equipment
	Function:	Rubber Tracked Loader
	Model/Type:	239D3,249D3,259D3,279D3,289D3,299D3,299D3 XE Compact Track Loader
	Serial Number:	
	Commercial Name:	Caterpillar

Fulfills all the relevant provisions of these regulations and/or other enactments as listed below:

Legislation	Approved Body	Document No.
2008 No. 1597		
2016 No. 1091		
2001 No. 1701 amended by 2005 No. 3525, Note (1)	Note (2)	

Note (1) Schedule -_____ Guaranteed Sound Power Level -_____dB (A)
Representative Equipment Type Sound Power Level - _____dB (A)
Engine Power per ____-____ kW Rated engine speed - _____ rpm
Technical Documentation accessible through person listed above authorized to compile the Technical File

Note (2) If applicable, information related to Approved Body.

Done at: **Signature**

Date: **Name/Position**

Note: The above information was correct as of July 2021, but may be subject to change, please refer to the individual declaration of conformity issued with the machine for exact details.

Declaration of Conformity
(Great Britain)

SMCS Code: 1000; 7000

S/N: L321–Up

S/N: TP31–Up

S/N: TY31–Up

S/N: EK51–Up

S/N: GJ51–Up

S/N: GK61–Up

S/N: ME61–Up

S/N: PF61–Up

S/N: TY61–Up

S/N: W6E1–Up

S/N: S1L1–Up

S/N: T9X1–Up

S/N: T7Z1–Up

Table 15

A Declaration of Conformity document was provided with the machine if it was manufactured to comply with specific requirements for the Great Britain. In order to determine the details of the applicable legislation, review the complete Declaration of Conformity provided with the machine. The extract shown below from a Great Britain Declaration of Conformity for machines that are declared compliant to 2008 No. 1597 applies only to those machines originally “UKCA” marked by the manufacturer listed and which have not since been modified.

DECLARATION OF CONFORMITY

Manufacturer: Caterpillar Inc., 100 N.E. Adams Street, Peoria, Illinois 61629, USA

Person authorized to compile the Technical File and to communicate relevant part (s) of the Technical File to the Authorities on request:

Standards & Regulations Manager Caterpillar France SAS
40 Avenue Leon-Blum 38000 Grenoble, France

I, the undersigned, _____, hereby certify that the construction equipment specified hereunder

Description:	Generic Denomination:	Earth - moving Equipment
	Function:	Wheeled Loader
	Model/Type:	226D3,232D3,236D3,242D3,246D3,262D3,272D3,272D3 XE Skid Steer Loader
	Serial Number:	
	Commercial Name:	Caterpillar

Fulfills all the relevant provisions of these regulations and/or other enactments as listed below:

Legislation	Approved Body	Document No.
2008 No. 1597		
2016 No. 1091		
2001 No. 1701 amended by 2005 No. 3525, Note (1)	Note (2)	

Note (1) Schedule -_____ Guaranteed Sound Power Level -_____dB (A)
Representative Equipment Type Sound Power Level - _____dB (A)
Engine Power per ____-____ kW Rated engine speed - _____ rpm
Technical Documentation accessible through person listed above authorized to compile the Technical File

Note (2) If applicable, information related to Approved Body.

Done at: **Signature**

Date: **Name/Position**

Note: The above information was correct as of July 2021, but may be subject to change, please refer to the individual declaration of conformity issued with the machine for exact details.

Declaration of Conformity
(Great Britain)

SMCS Code: 1000; 7000

Table 16

A Declaration of Conformity document was provided with the machine if it was manufactured to comply with specific requirements for the Great Britain. In order to determine the details of the applicable legislation, review the complete Declaration of Conformity provided with the machine. The extract shown below from a Great Britain Declaration of Conformity for machines that are declared compliant to 2008 No. 1597 applies only to those machines originally “UKCA” marked by the manufacturer listed and which have not since been modified.

DECLARATION OF CONFORMITY

Manufacturer: Caterpillar Inc., 100 N.E. Adams Street, Peoria, Illinois 61629, USA

Person authorized to compile the Technical File and to communicate relevant part (s) of the Technical File to the Authorities on request:

Standards & Regulations Manager Caterpillar France SAS
40 Avenue Leon-Blum 38000 Grenoble, France

I, the undersigned, _____, hereby certify that the construction equipment specified hereunder

Description:	Generic Denomination:	Earth - moving Equipment
	Function:	Bucket with Top Clamp
	Model/Type:	Industrial Grapple Bucket, Utility Grapple Bucket
	Serial Number:	
	Commercial Name:	Caterpillar

Fulfills all the relevant provisions of these regulations and/or other enactments as listed below:

Legislation	Approved Body	Document No.
2008 No. 1597		
2016 No. 1091		
2001 No. 1701 amended by 2005 No. 3525, Note (1)	Note (2)	

Note (1) Schedule -_____ Guaranteed Sound Power Level -_____dB (A)
Representative Equipment Type Sound Power Level - _____dB (A)
Engine Power per ____-____ kW Rated engine speed - _____ rpm
Technical Documentation accessible through person listed above authorized to compile the Technical File

Note (2) If applicable, information related to Approved Body.

Done at: **Signature**

Date: **Name/Position**

Note: The above information was correct as of August 2021, but may be subject to change, please refer to the individual declaration of conformity issued with the machine for exact details.

Declaration of Conformity
(Great Britain)

SMCS Code: 1000; 7000

Table 17

A Declaration of Conformity document was provided with the machine if it was manufactured to comply with specific requirements for the Great Britain. In order to determine the details of the applicable legislation, review the complete Declaration of Conformity provided with the machine. The extract shown below from a Great Britain Declaration of Conformity for machines that are declared compliant to 2008 No. 1597 applies only to those machines originally “UKCA” marked by the manufacturer listed and which have not since been modified.

DECLARATION OF CONFORMITY

Manufacturer: Caterpillar Inc., 100 N.E. Adams Street, Peoria, Illinois 61629, USA

Person authorized to compile the Technical File and to communicate relevant part (s) of the Technical File to the Authorities on request:

Standards & Regulations Manager Caterpillar France SAS
40 Avenue Leon-Blum 38000 Grenoble, France

I, the undersigned, _____, hereby certify that the construction equipment specified hereunder

Description:	Generic Denomination:	Earth - moving Equipment
	Function:	Rake with Top Clamp
	Model/Type:	Industrial Grapple Rake
	Serial Number:	
	Commercial Name:	Caterpillar

Fulfills all the relevant provisions of these regulations and/or other enactments as listed below:

Legislation	Approved Body	Document No.
2006/42/EC	N/A	

Note (1) Schedule -_____ Guaranteed Sound Power Level -_____dB (A)
Representative Equipment Type Sound Power Level - _____dB (A)
Engine Power per ____-____ kW Rated engine speed - _____ rpm
Technical Documentation accessible through person listed above authorized to compile the Technical File

Note (2) If applicable, information related to Approved Body.

Done at: **Signature**

Date: **Name/Position**

Note: The above information was correct as of August 2021, but may be subject to change, please refer to the individual declaration of conformity issued with the machine for exact details.

Declaration of Conformity
(Great Britain)

SMCS Code: 1000; 7000

Table 18

A Declaration of Conformity document was provided with the machine if it was manufactured to comply with specific requirements for the Great Britain. In order to determine the details of the applicable legislation, review the complete Declaration of Conformity provided with the machine. The extract shown below from a Great Britain Declaration of Conformity for machines that are declared compliant to 2008 No. 1597 applies only to those machines originally “UKCA” marked by the manufacturer listed and which have not since been modified.

DECLARATION OF CONFORMITY

Manufacturer: Caterpillar Inc., 100 N.E. Adams Street, Peoria, Illinois 61629, USA

Person authorized to compile the Technical File and to communicate relevant part (s) of the Technical File to the Authorities on request:

Standards & Regulations Manager Caterpillar France SAS
40 Avenue Leon-Blum 38000 Grenoble, France

I, the undersigned, _____, hereby certify that the construction equipment specified hereunder

Description:	Generic Denomination:	Earth - moving Equipment
	Function:	Fork with Top Clamp
	Model/Type:	Industrial Grapple Fork, Utility Grapple Fork
	Serial Number:	
	Commercial Name:	Caterpillar

Fulfills all the relevant provisions of these regulations and/or other enactments as listed below:

Legislation	Approved Body	Document No.
2006/42/EC	N/A	

Note (1) Schedule -_____ Guaranteed Sound Power Level -_____dB (A)
Representative Equipment Type Sound Power Level - _____dB (A)
Engine Power per ____-____ kW Rated engine speed - _____ rpm
Technical Documentation accessible through person listed above authorized to compile the Technical File

Note (2) If applicable, information related to Approved Body.

Done at: **Signature**

Date: **Name/Position**

Note: The above information was correct as of August 2021, but may be subject to change, please refer to the individual declaration of conformity issued with the machine for exact details.

Declaration of Conformity
(Great Britain)

SMCS Code: 1000; 7000

Table 19

A Declaration of Conformity document was provided with the machine if it was manufactured to comply with specific requirements for the Great Britain. In order to determine the details of the applicable legislation, review the complete Declaration of Conformity provided with the machine. The extract shown below from a Great Britain Declaration of Conformity for machines that are declared compliant to 2008 No. 1597 applies only to those machines originally “UKCA” marked by the manufacturer listed and which have not since been modified.

DECLARATION OF CONFORMITY

Manufacturer: Caterpillar Inc., 100 N.E. Adams Street, Peoria, Illinois 61629, USA

Person authorized to compile the Technical File and to communicate relevant part (s) of the Technical File to the Authorities on request:

Standards & Regulations Manager Caterpillar France SAS
40 Avenue Leon-Blum 38000 Grenoble, France

I, the undersigned, _____, hereby certify that the construction equipment specified hereunder

Description:	Generic Denomination:	Earth - moving Equipment
	Function:	Multipurpose Bucket
	Model/Type:	Multipurpose (MP) Bucket
	Serial Number:	
	Commercial Name:	Caterpillar

Fulfills all the relevant provisions of these regulations and/or other enactments as listed below:

Legislation	Approved Body	Document No.
2006/42/EC	N/A	

Note (1) Schedule -_____ Guaranteed Sound Power Level -_____dB (A)
Representative Equipment Type Sound Power Level - _____dB (A)
Engine Power per ____-____ kW Rated engine speed - _____ rpm
Technical Documentation accessible through person listed above authorized to compile the Technical File

Note (2) If applicable, information related to Approved Body.

Done at: **Signature**

Date: **Name/Position**

Note: The above information was correct as of August 2021, but may be subject to change, please refer to the individual declaration of conformity issued with the machine for exact details.

Declaration of Conformity
(Great Britain)

SMCS Code: 1000; 7000

Table 20

A Declaration of Conformity document was provided with the machine if it was manufactured to comply with specific requirements for the Great Britain. In order to determine the details of the applicable legislation, review the complete Declaration of Conformity provided with the machine. The extract shown below from a Great Britain Declaration of Conformity for machines that are declared compliant to 2008 No. 1597 applies only to those machines originally “UKCA” marked by the manufacturer listed and which have not since been modified.

DECLARATION OF CONFORMITY

Manufacturer: Caterpillar Inc., 100 N.E. Adams Street, Peoria, Illinois 61629, USA

Person authorized to compile the Technical File and to communicate relevant part (s) of the Technical File to the Authorities on request:

Standards & Regulations Manager Caterpillar France SAS
40 Avenue Leon-Blum 38000 Grenoble, France

I, the undersigned, _____, hereby certify that the construction equipment specified hereunder

Description:	Generic Denomination:	Earth - moving Equipment
	Function:	Material Handling Arm
	Model/Type:	Material Handling Arm (MHA), Truss Boom, Lifting Hook
	Serial Number:	
	Commercial Name:	Caterpillar

Fulfills all the relevant provisions of these regulations and/or other enactments as listed below:

Legislation	Approved Body	Document No.
2006/42/EC	N/A	

Note (1) Schedule -_____ Guaranteed Sound Power Level -_____dB (A)
Representative Equipment Type Sound Power Level - _____dB (A)
Engine Power per ____-____ kW Rated engine speed - _____ rpm
Technical Documentation accessible through person listed above authorized to compile the Technical File

Note (2) If applicable, information related to Approved Body.

Done at: **Signature**

Date: **Name/Position**

Note: The above information was correct as of August 2021, but may be subject to change, please refer to the individual declaration of conformity issued with the machine for exact details.

Declaration of Conformity
(European Union)

SMCS Code: 1000; 7000

Table 21

An EC or EU Declaration of Conformity document was provided with the machine if it was manufactured to comply with specific requirements for the European Union. In order to determine the details of the applicable Directives, review the complete EC or EU Declaration of Conformity provided with the machine. The extract shown below from an EC or EU Declaration of Conformity for machines that are declared compliant to “2006/42/EC” applies only to those machines originally “CE” marked by the manufacturer listed and which have not since been modified.

Original EC or EU DECLARATION OF CONFORMITY

Manufacturer:
Caterpillar Inc., 100 N.E. Adams Street, Peoria, Illinois 61629, USA

Person authorized to compile the Technical File and to communicate relevant part (s) of the Technical File to the Authorities of European Union Member States on request:

Standards & Regulations Manager, Caterpillar France SAS
40 Avenue Leon-Blum 38000 Grenoble, France

I, the undersigned, _____, hereby certify that the construction equipment specified hereunder

Description:	Generic Denomination:	Earth-moving Equipment
	Function:	Multipurpose Bucket
	Model/Type:	Multipurpose (MP) Bucket
	Serial Number:	
	Commercial Name:	Caterpillar

Fulfills all the relevant provisions of the following Directives

Directives	Notified Body	Document No.
2006/42/EC	N/A	
2014/30/EU	N/A	

Note (1) Technical Documentation accessible through person listed above authorized to compile the Technical File

Done at: **Signature**

Date: **Name/Position**

Note: The above information was correct as of February 2016, but may be subject to change, please refer to the individual declaration of conformity issued with the machine for exact details.

Declaration of Conformity
(European Union)

SMCS Code: 1000; 7000

Table 22

An EC or EU Declaration of Conformity document was provided with the machine if it was manufactured to comply with specific requirements for the European Union. In order to determine the details of the applicable Directives, review the complete EC or EU Declaration of Conformity provided with the machine. The extract shown below from an EC or EU Declaration of Conformity for machines that are declared compliant to “2006/42/EC” applies only to those machines originally “CE” marked by the manufacturer listed and which have not since been modified.

Original EC or EU DECLARATION OF CONFORMITY

Manufacturer:
Caterpillar Inc., 100 N.E. Adams Street, Peoria, Illinois 61629, USA

Person authorized to compile the Technical File and to communicate relevant part (s) of the Technical File to the Authorities of European Union Member States on request:

Standards & Regulations Manager, Caterpillar France SAS
40 Avenue Leon-Blum 38000 Grenoble, France

I, the undersigned, _____, hereby certify that the construction equipment specified hereunder

Description:	Generic Denomination:	Earth-moving Equipment
	Function:	Material Handling Arm
	Model/Type:	Material Handling Arm (MHA), Truss Boom, Lifting Hook
	Serial Number:	
	Commercial Name:	Caterpillar

Fulfills all the relevant provisions of the following Directives

Directives	Notified Body	Document No.
2006/42/EC	N/A	

Note (1) Technical Documentation accessible through person listed above authorized to compile the Technical File

Done at: **Signature**

Date: **Name/Position**

Note: The above information was correct as of August 2021, but may be subject to change, please refer to the individual Declaration of Conformity issued with the machine for exact details.

Declaration of Conformity
(European Union)

SMCS Code: 1000; 7000

Table 23

An EC or EU Declaration of Conformity document was provided with the machine if it was manufactured to comply with specific requirements for the European Union. In order to determine the details of the applicable Directives, review the complete EC or EU Declaration of Conformity provided with the machine. The extract shown below from an EC or EU Declaration of Conformity for machines that are declared compliant to “2006/42/EC” applies only to those machines originally “CE” marked by the manufacturer listed and which have not since been modified.

Original EC or EU DECLARATION OF CONFORMITY

Manufacturer:
Caterpillar Inc., 100 N.E. Adams Street, Peoria, Illinois 61629, USA

Person authorized to compile the Technical File and to communicate relevant part (s) of the Technical File to the Authorities of European Union Member States on request:

Standards & Regulations Manager, Caterpillar France SAS
40 Avenue Leon-Blum 38000 Grenoble , France

I, the undersigned, _____, hereby certify that the construction equipment specified hereunder

Description:	Generic Denomination:	Earth-moving Equipment
	Function:	Fork with Top Clamp
	Model/Type:	Industrial Grapple Fork, Utility Grapple Fork
	Serial Number:	
	Commercial Name:	Caterpillar

Fulfills all the relevant provisions of the following Directives

Directives	Notified Body	Document No.
2006/42/EC	N/A	

Note (1) Technical Documentation accessible through person listed above authorized to compile the Technical File

Done at: **Signature**

Date: **Name/Position**

Note: The above information was correct as of August 2021, but may be subject to change, please refer to the individual Declaration of Conformity issued with the machine for exact details.

Declaration of Conformity
(European Union)

SMCS Code: 1000; 7000

Table 24

An EC or EU Declaration of Conformity document was provided with the machine if it was manufactured to comply with specific requirements for the European Union. In order to determine the details of the applicable Directives, review the complete EC or EU Declaration of Conformity provided with the machine. The extract shown below from an EC or EU Declaration of Conformity for machines that are declared compliant to “2006/42/EC” applies only to those machines originally “CE” marked by the manufacturer listed and which have not since been modified.

Original EC or EU DECLARATION OF CONFORMITY

Manufacturer:
Caterpillar Inc., 100 N.E. Adams Street, Peoria, Illinois 61629, USA

Person authorized to compile the Technical File and to communicate relevant part (s) of the Technical File to the Authorities of European Union Member States on request:

Standards & Regulations Manager, Caterpillar France SAS
40 Avenue Leon-Blum 38000 Grenoble , France

I, the undersigned, _____, hereby certify that the construction equipment specified hereunder

Description:	Generic Denomination:	Earth-moving Equipment
	Function:	Fork with Top Clamp
	Model/Type:	Industrial Grapple Fork, Utility Grapple Fork
	Serial Number:	
	Commercial Name:	Caterpillar

Fulfills all the relevant provisions of the following Directives

Directives	Notified Body	Document No.
2006/42/EC	N/A	

Note (1) Technical Documentation accessible through person listed above authorized to compile the Technical File

Done at: **Signature**

Date: **Name/Position**

Note: The above information was correct as of August 2021, but may be subject to change, please refer to the individual Declaration of Conformity issued with the machine for exact details.

Declaration of Conformity
(European Union)

SMCS Code: 1000; 7000

Table 25

An EC Declaration of Conformity document was provided with the machine if it was manufactured to comply with specific requirements for the European Union. In order to determine the details of the applicable Directives, review the complete EC Declaration of Conformity provided with the machine. The extract shown below from an EC Declaration of Conformity for machines that are declared compliant to “2006/42/EC” applies only to those machines originally “CE” marked by the manufacturer listed and which have not since been modified.

EC DECLARATION OF CONFORMITY OF MACHINERY

Manufacturer:
Caterpillar Inc., 100 N.E. Adams Street, Peoria, Illinois 61629, USA

Person authorized to compile the Technical File and to communicate relevant part (s) of the Technical File to the Authorities of European Union Member States on request:

Standards & Regulations Manager, Caterpillar France SAS
40 Avenue Leon-Blum 38000 Grenoble , France

I, the undersigned, _____, hereby certify that the construction equipment specified hereunder

Description:	Generic Denomination:	Earth-moving Equipment
	Function:	Rake with Top Clamp
	Model/Type:	Industrial Grapple Rake
	Serial Number:	
	Commercial Name:	Caterpillar

Fulfills all the relevant provisions of the following Directives

Directives	Notified Body	Document No.
2006/42/EC	N/A	

Note (1) Technical Documentation accessible through person listed above authorized to compile the Technical File

Done at: **Signature**

Date: **Name/Position**

Note: The above information was correct as of August 2021, but may be subject to change, please refer to the individual declaration of conformity issued with the machine for exact details.

Declaration of Conformity
(European Union)

SMCS Code: 1000; 7000

Table 26

An EC or EU Declaration of Conformity document was provided with the machine if it was manufactured to comply with specific requirements for the European Union. In order to determine the details of the applicable Directives, review the complete EC or EU Declaration of Conformity provided with the machine. The extract shown below from an EC or EU Declaration of Conformity for machines that are declared compliant to “2006/42/EC” applies only to those machines originally “CE” marked by the manufacturer listed and which have not since been modified.

Original EC or EU DECLARATION OF CONFORMITY

Manufacturer:
Caterpillar Inc., 100 N.E. Adams Street, Peoria, Illinois 61629, USA

Person authorized to compile the Technical File and to communicate relevant part (s) of the Technical File to the Authorities of European Union Member States on request:

Standards & Regulations Manager, Caterpillar France SAS
40 Avenue Leon-Blum 38000 Grenoble , France

I, the undersigned, _____, hereby certify that the construction equipment specified hereunder

Description:	Generic Denomination:	Earth-moving Equipment
	Function:	Bucket with Top Clamp
	Model/Type:	Industrial Grapple Bucket, Utility Grapple Bucket
	Serial Number:	
	Commercial Name:	Caterpillar

Fulfills all the relevant provisions of the following Directives

Directives	Notified Body	Document No.
2006/42/EC	N/A	

Note (1) Technical Documentation accessible through person listed above authorized to compile the Technical File

Done at: **Signature**

Date: **Name/Position**

Note: The above information was correct as of August 2021, but may be subject to change, please refer to the individual Declaration of Conformity issued with the machine for exact details.

Operation Section

Before Operation

i02601969

Mounting and Dismounting

SMCS Code: 7000

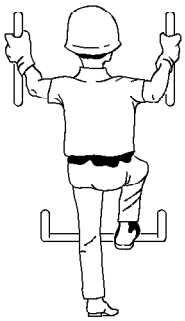

Illustration 143 g00037860
Typical example

Mount the machine and dismount the machine only at locations that have steps and/or handholds. Before you mount the machine, clean the steps and the handholds. Inspect the steps and handholds. Make all necessary repairs.

Face the machine whenever you get on the machine and whenever you get off the machine.

Maintain a three-point contact with the steps and with the handholds.

Note: Three-point contact can be two feet and one hand. Three-point contact can also be one foot and two hands.

Do not mount a moving machine. Do not dismount a moving machine. Never jump off the machine. Do not carry tools or supplies when you try to mount the machine or when you try to dismount the machine. Use a hand line to pull equipment onto the platform. Do not use any controls as handholds when you enter the operator compartment or when you exit the operator compartment.

i07942654

Daily Inspection

SMCS Code: 1000; 7000

NOTICE
Accumulated grease and oil on a machine is a fire hazard. Remove this debris with steam cleaning or high pressure water, at least every 1000 hours or each time any significant quantity of oil is spilled on a machine.

For maximum service life of the machine, make a thorough daily inspection before you operate the machine. Remove any debris from the engine compartment and the undercarriage. Ensure that all guards, covers, and caps are secured. Inspect all hoses and belts for damage. Make the needed repairs before you operate the machine.

Inspect the area around the machine and under the machine. Look for loose bolts, trash buildup, oil, coolant, fuel, or exhaust leakage, broken parts, or worn parts.

Note: Watch closely for leaks. If you observe a leak, find the source of the leak and correct the leak. If you suspect a leak or you observe a leak, check the fluid levels more frequently.

Visually inspect the high-pressure fuel lines before the engine is started. If you inspect the engine in operation, always use the proper inspection procedure to avoid a fluid penetration hazard. Refer to Operation and Maintenance Manual, “High-Pressure Fuel Lines”, in the Safety Section.

Inspect the condition of the equipment and of the hydraulic components.

Check all the oil levels, all the coolant levels, and all the fuel levels.

Remove any trash buildup and debris. Inspect the area between lift cylinder and lower plate of the lift tower for debris and clean as necessary. Inspect the rear portion of the right side lift cylinder tower for debris and clean as necessary.

Perform all necessary repairs before you operate the machine.

Ensure that all covers and guards are securely attached.

Adjust the mirrors for the correct rear view of the machine.

Grease all the fittings that are scheduled daily.

If equipped, inspect the status of the Fire Suppression System (FSS) on the operator control module, follow "Daily Inspections" listed in the Fire Suppression System Operator and Maintenance Manual.

Daily, perform the procedures that are applicable to your machine. Refer to the Operation and Maintenance Manual, “Maintenance Interval Schedule” “Every 10 Service Hours or Daily” category for the list of procedures.

Machine Operation

i08016508

Alternate Exit

SMCS Code: 7000

Primary Exit

Illustration 144 g06327960

(1) Latch pin

The rear window in the machine serves as the primary alternate exit. The window will need to be removed to use the primary alternate exit. Pull on the ring at the top of the window to remove the window. This will remove the seal that holds the window in place. When the seal is taken out, carefully remove the window.

Secondary Exit

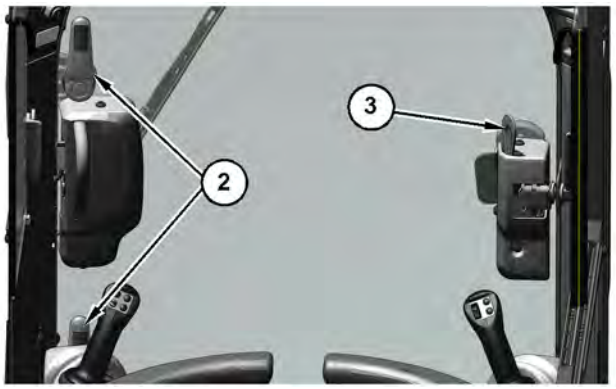

Illustration 145 g06327977

(2) Release levers for the hinge
(3) Door Latch

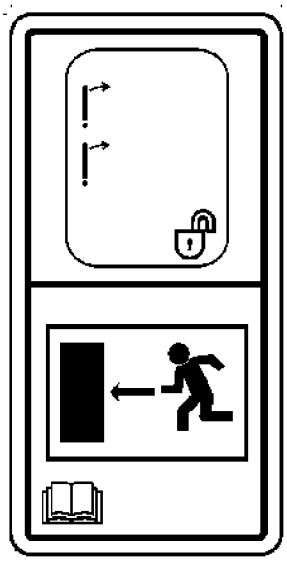

Illustration 146 g03381664

If necessary, the cab door may be removed from the hinges inside the machine. Use the following procedure:

1. Release the door from the striker (4).
2. Use the two levers (2) to release the hinge. Move both levers clockwise
3. Push the door away from the cab.

Reassembly

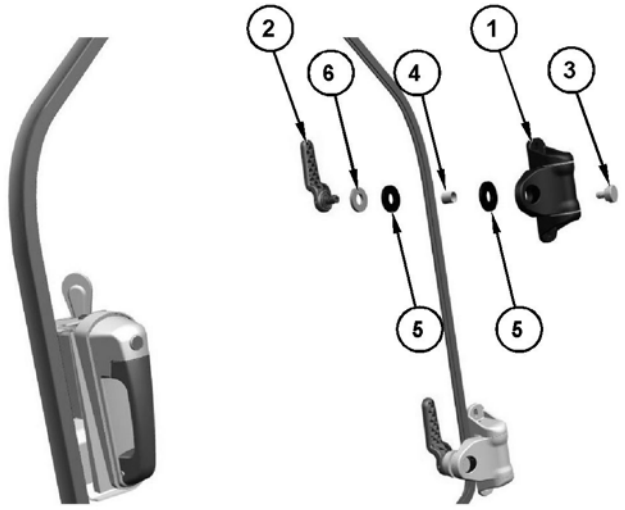

Illustration 147 g06508561

(1) Hinge Asm
(2) Handle Asm
(3) Latch Asm
(4) Bushing
(5) Rubber Gasket
(6) Hard Washer

1. Ensure that the components are assembled in the proper order according to illustration 147 .

Note: Failure to reassemble the hinges properly may negatively impact door life and function of the alternate exit.

2. With the handle assembly in the horizontal position, press the handle assembly into the latch assembly.
3. Rotate the handle assembly to the vertical position to complete the hinge reassembly.
4. Repeat for the other hinge assembly.

i07092308

Seat Belt

SMCS Code: 7327

Note: This machine was equipped with a seat belt when the machine was shipped from Caterpillar. At the time of installation, the seat belt and the instructions for installation of the seat belt meet the SAE J386 and ISO 6683 standards. Consult your Cat dealer for all replacement parts.

Always check the condition of the seat belt and the condition of the mounting hardware before you operate the machine.

Seat Belt Adjustment for Retractable Seat Belts

Fastening The Seat Belt

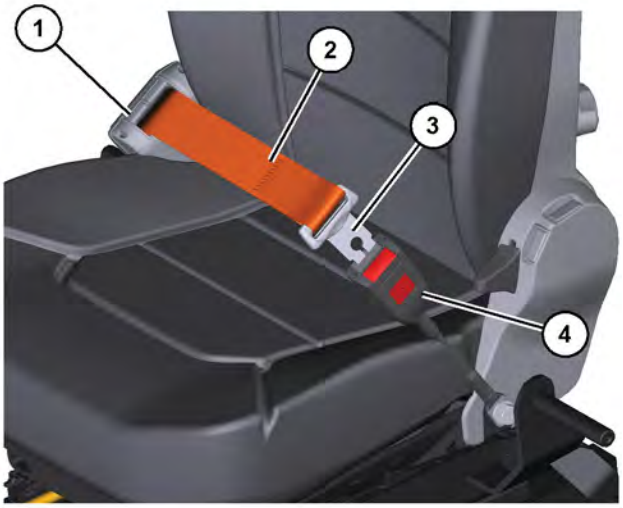

Illustration 148 g06223891

Pull seat belt (2) out of retractor (1) in a continuous motion.

Fasten seat belt catch (3) into buckle (4). Make sure that the seat belt is placed low across the lap of the operator.

The retractor will adjust the belt length and the retractor will lock in place. The comfort ride sleeve will allow the operator to have limited movement.

Releasing The Seat Belt

Illustration 149 g06223894

Push the release button on the buckle to release the seat belt. The seat belt will automatically retract into the retractor.

Extension of the Seat Belt

WARNING

When using retractable seat belts, do not use seat belt extensions, or personal injury or death can result.

The retractor system may or may not lock up depending on the length of the extension and the size of the person. If the retractor does not lock up, the seat belt will not retain the person.

Longer, non-retractable seat belts and extensions for the non-retractable seat belts are available.

Caterpillar requires only non-retractable seat belts to be used with a seat belt extension.

Consult your Cat dealer for longer seat belts and for information on extending the seat belts.

i08748352

Operator Controls

SMCS Code: 7300; 7451

Note: Your machine may not be equipped with all the controls that are discussed in this topic.

The operation section is a reference for the new operator and a refresher for the experienced operator. This section includes descriptions of gauges, switches, machine controls, attachment controls, transportation, and towing information.

Illustrations guide the operator through correct procedures of checking, starting, operating, and stopping the machine. Operating techniques that are outlined in this publication are basic. Skill and techniques develop as the operator gains knowledge of the machine and the capabilities of the machine.

Note: Simple hydromechanical work tools may be shipped without hydraulic oil. Uneven movement may occur until all the air has been removed from the work tool. You may need to add hydraulic oil to the machine after the machine fills the circuits of the work tool. Refer to Operation and Maintenance Manual, , “Hydraulic System Oil Level - Check" for the proper procedure for checking the hydraulic oil level.

Note: If the machine is not equipped with a cab that is enclosed, Caterpillar recommends the use of a flying object guard. If the machine is equipped with an enclosed cab, operate the machine with the cab door in the CLOSED position.

Left Side Controls

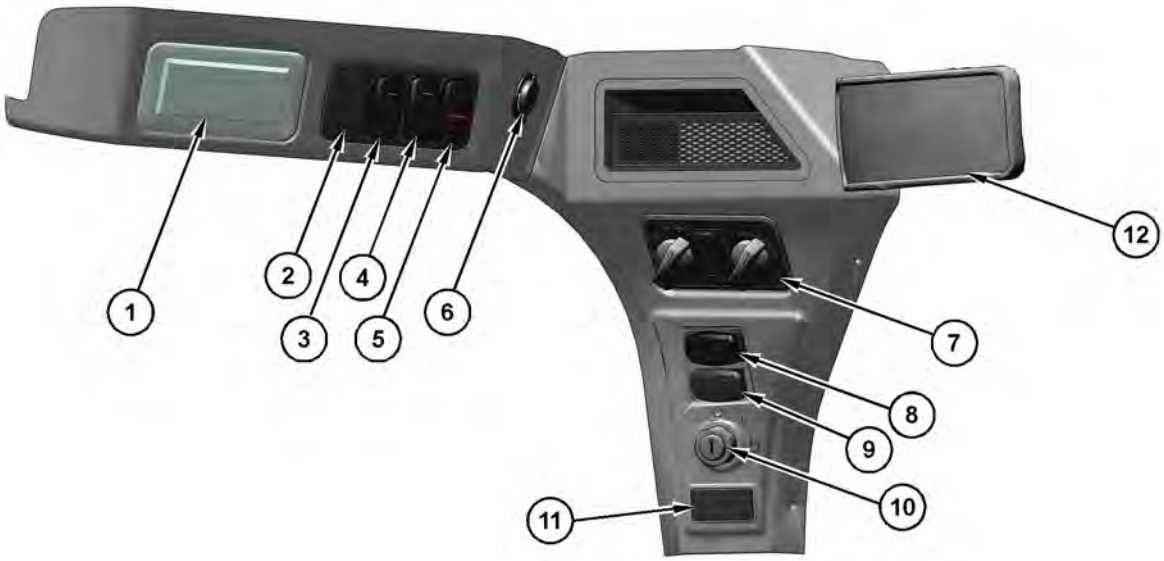

Illustration 150 g06330870

(1) Cab dome light
(2) Auxiliary electrical control
(3) Multifunction switch for left-hand trigger
(4) Self-Level System Switch
(5) Work tool coupler control switch
(6) Power Supply Port
(7) Heating and air conditioning controls
(8) Window wiper and washer control
(9) Parking brake switch
(10) Engine key start switch
(11) Selectable control pattern switch
(12) Mirror

Cab Dome Light (1)

Cab Dome Light – Press either side of the light to turn on the light. Move the light to the middle position to turn off the light.

Auxiliary Electrical Control “AUX 8” (2)

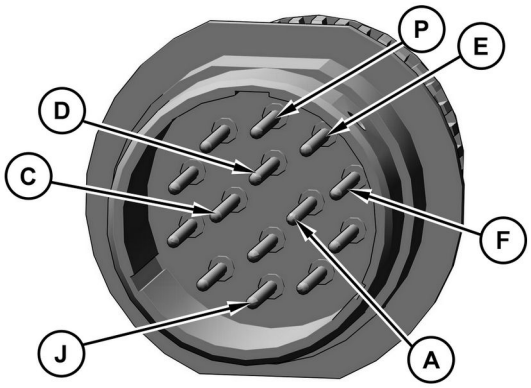

Illustration 151 g06353203

Typical electrical connection on the loading arm

(A) Left-Hand Trigger Control “AUX 7”
(C) C- Control
(D) C+ Control
(E) C2 Control
(F) C1 Control
(J) Auxiliary Electrical Control “AUX 8”
(P) +12V with KEY ON

Auxiliary Electrical Control “AUX 8” – The auxiliary electrical control supplies continuous electrical power to pin (J) on the connector for the work tool on the loader arm. Press the bottom of the switch to turn on electrical power. Press the top of the switch to turn off electrical power.

Multifunction Switch for the Left-Hand Trigger (3)

This switch is used to toggle the function of the trigger on the left-hand joystick between Two Speed and the Auxiliary Electrical Function “AUX 7” .

Two-Speed

Two-Speed – Push the top of the multifunction switch to use the trigger for the two-speed control. Press the trigger and release the trigger on the front of the left-hand joystick to activate two-speed travel mode. To return to one-speed travel mode, press the trigger and release the trigger again.

Note: Keep the work tool close to the ground when you travel in two-speed mode. This method will maximize the stability of the machine.

Note: Do not move the multifunction switch while the two-speed function is active. Ensure that the machine is in one-speed mode before the Auxiliary Electrical Function “AUX 7” is activated.

Note: The Creep Mode must be turned off to shift the machine into two speed. If you activate the Creep Mode, the machine will return to one-speed mode. If you set the parking brake, the machine will return to one-speed mode.

Auxiliary Electrical Function “AUX 7”

Note: If the switch is not present, the trigger on the left-hand joystick only provides this auxiliary function.

Auxiliary Electrical Function “AUX 7” – Push the bottom of the switch to enable the seventh auxiliary electrical function. Pull the trigger and hold the trigger on the left-hand joystick to provide electrical power to pin (A) on the work tool connector on the loader arm. Release the trigger to deactivate the control.

Self-Level System Switch (4)

Press the bottom of the switch to enable self-level. The alert indicator for Self-Level will illuminate indicating the system is on. Press the top of the switch to turn off the Self-Level system.

Self-Level

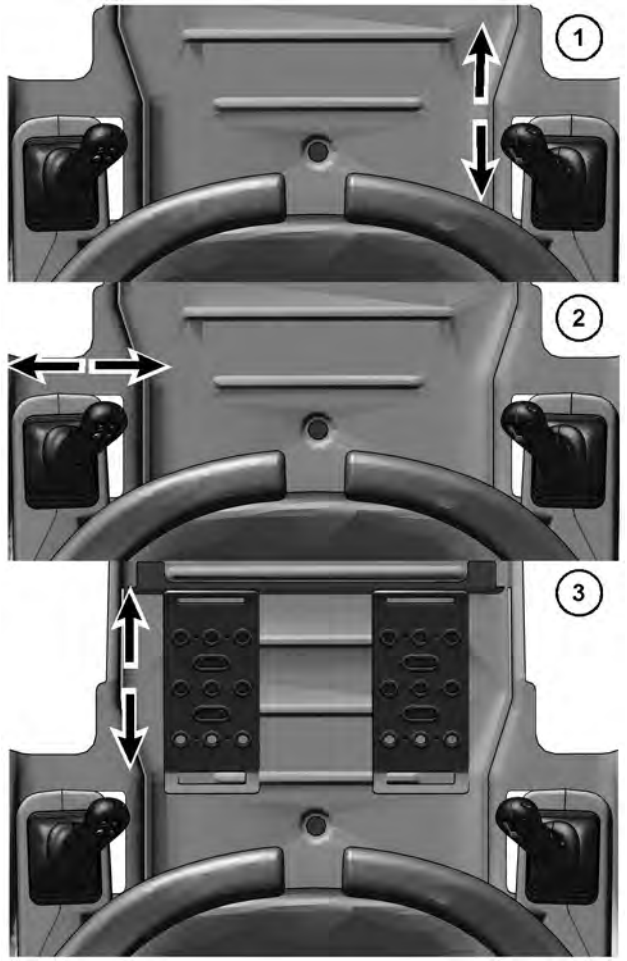

Illustration 152 g06354572

(1) Cat Control Pattern
(2) H-Control Pattern
(3) Hand and Foot Control Pattern

The Dual Direction Self-Level feature maintains the approximate starting angle of the work tool as the loader arms are raised or lowered.

Return to Dig

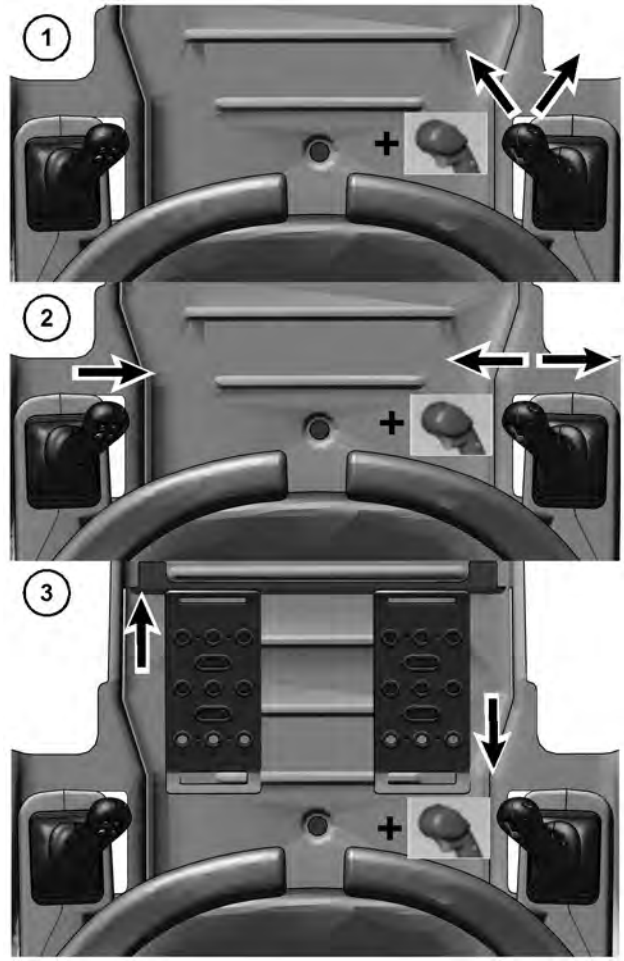

Illustration 153 g06354582

(1) Cat Control Pattern
(2) H-Control Pattern
(3) Hand and Foot Control Pattern

The Return to Dig feature lowers the lift arms and returns the work tool to a user-selected target angle. Set the work tool to the desired angle using the controls. Pull the right-hand joystick trigger and hold for 5 seconds to set the target angle. The Self-Level alert indicator will flash twice to confirm that the angle was accepted. After a dump cycle, with the lift arms raised, give a momentary Lower and Dump or Lower and Tilt Back command. Momentarily press and release the right-hand joystick trigger to initiate Return to Dig mode. The lift arms will lower to the stops and the work tool will return to the user-selected target angle without further operator input.

Note: The target angle will reset to a factory default when the machine is keyed off. The factory default approximates a level bucket with the lift arms in the lowest position.

Work Tool Positioner

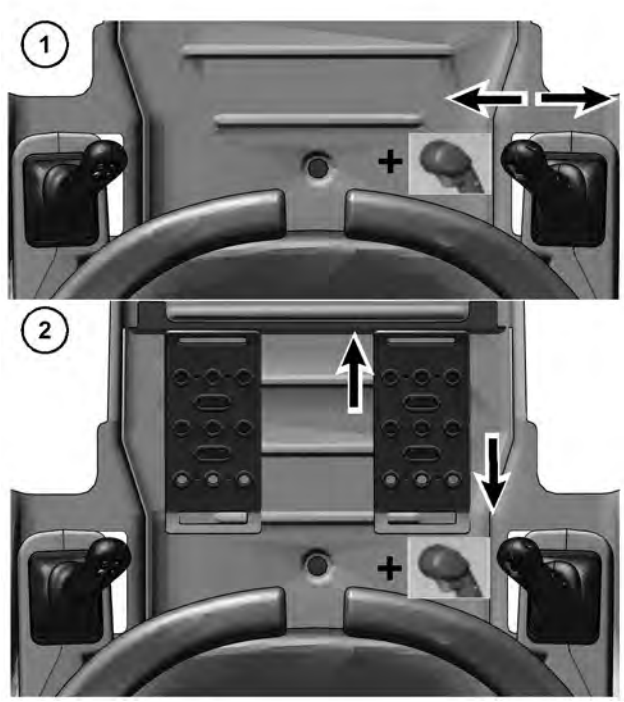

Illustration 154 g06354805

(1) Cat Control Pattern and H-Control Pattern
(2) Hand and Foot Control Pattern

The Work Tool Positioner feature returns the work tool to a user-selected target angle. Set the work tool to the desired angle using the controls. Pull the right-hand joystick trigger and hold for 5 seconds to set the target angle. The Self-Level alert indicator will flash twice to confirm that the angle was accepted. Start the work tool in the direction of the target angle by giving a momentary Dump or Tilt Back command. Momentarily press and release the right-hand joystick trigger to initiate Work Tool Positioner mode. The work tool will return to the user-selected target angle without further operator input. Work Tool Positioner mode has no impact on the lift arm position.

Note: The target angle will reset to a factory default when the machine is keyed off. The factory default approximates a level bucket with the lift arms in the lowest position.

Work Tool Coupler Control (5)

WARNING

Improper Attachment of the Work Tool could result in injury or death.

Do not operate the machine without confirmation that the coupler pins are fully engaged. Follow the operating procedures in the Operation and Maintenance Manual.

Work Tool Coupler Control – The work tool coupler controls the engagement of the coupler pins.

Note: The hydraulic quick coupler only works while the ENGINE IS RUNNING.

Disengaged – Push the red button upward and press the bottom of the switch. Hold the switch in the downward position until the coupler pins disengage.

Engaged – Press the top of the switch and hold the top of the switch until the coupler pins engage.

Refer to Operation and Maintenance Manual, “Work Tool Coupler Operation” for the proper procedure for the work tool coupler.

Power Supply Port (6)

This electrical outlet is a 12V power round receptacle in machines equipped with the standard display or a USB port in machines equipped with the Advanced Display.

Either may be used to operate electrical accessories. The USB port may be used by the owner to upload a custom image to the Advanced Display. See Operator Controls, Right Side Controls (Alternate), Menu Screen, Service Menu". The USB port is also used by the Cat dealer to service the Advanced Display software as needed.

Heating and Air Conditioning Control Panel (7)

Heating and air conditioning control panel (7) houses the switches for controlling the temperature and operator comfort level inside the cab.

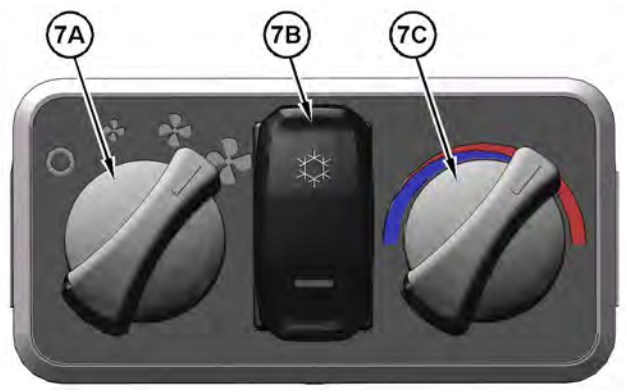

Illustration 155 g06330900

Fan Speed Control (7A) – The fan speed switch controls the three-speed blower fan motor.

Air Conditioning Switch (7B) – Depress A/C switch (7B) to activate the air conditioning system. Turn fan speed switch (7A) to LOW, MEDIUM, or HIGH speed. Adjust temperature variable control (7C) for the desired temperature.

Temperature Variable Control (7C) – Turn the control knob anywhere between the blue area (left) and the red area (right). This action will control the amount of heating and cooling.

Window Wiper and Window Washer (8)

Window Wiper and Window Washer – Move the switch to the middle position to turn on the wiper. Press the right side of the switch to operate the washer. Press the left side of the switch to turn off the wipers.

Parking Brake Control (9)

Parking Brake Control – After starting the engine, press the right side of the switch and release the switch to disengage the parking brake and enable the hydraulic implement system. Successive operation of this switch will only cycle the parking brake on and off and will not impact the hydraulic implement system.

Note: The parking brake will engage when the engine is stopped. The parking brake will engage when the armrests are moved to the RAISED position. The parking brake will engage when the operator leaves the operator seat for a time.

Note: If the switch for the Joystick Control Pattern is installed, select a pattern to release the parking brake. See Selectable Control Pattern Switch (11).

Engine Key Start Switch (10)

OFF – Insert the engine start switch key only from the OFF position and remove the engine start switch key only from the OFF position. Turn the engine start switch key to the OFF position to stop the engine. In the OFF position, there is no power to most electrical circuits on the machine. The cab dome light is operational even when the engine start switch is in the OFF position.

ON – Turn the engine start switch key clockwise to the ON position to activate all the cab circuits.

START – Turn the engine start switch key clockwise to the START position to crank the engine. Release the engine start switch key after the engine starts and the engine start switch key returns to the ON position.

Note: If the Machine Security System is enabled, the correct pin code must be entered before the machine will start. See "Anti-Theft Security System", for further information.

Note: If the engine fails to start, turn the engine start switch key to the OFF position to attempt to start the engine again. Refer to the Operation and Maintenance Manual, , “Engine Starting"for more details about starting the engine.

Selectable Control Pattern Switch (11)

If the machine is equipped with the optional Selectable Control Pattern feature, a rocker switch will be present at this location with the number (1) on one side and the number (2) on the other side. After starting the machine, a control pattern must be selected before the parking brake can be released. Press the switch to the (1) position for Cat Control Pattern or press the switch to the (2) position for H-Control Pattern. The alert indicators (1) and (2) will blink until a control pattern is selected. Once a control pattern has been selected, activating the parking brake will not affect the selection of the pattern. Keying the machine off will reset the control pattern selection. Refer to the section "Joystick Controls" for detailed information on the possible joystick control patterns.

Mirror (12)

Adjust the rear view mirror properly to view objects that are behind the machine.

Right Side Controls

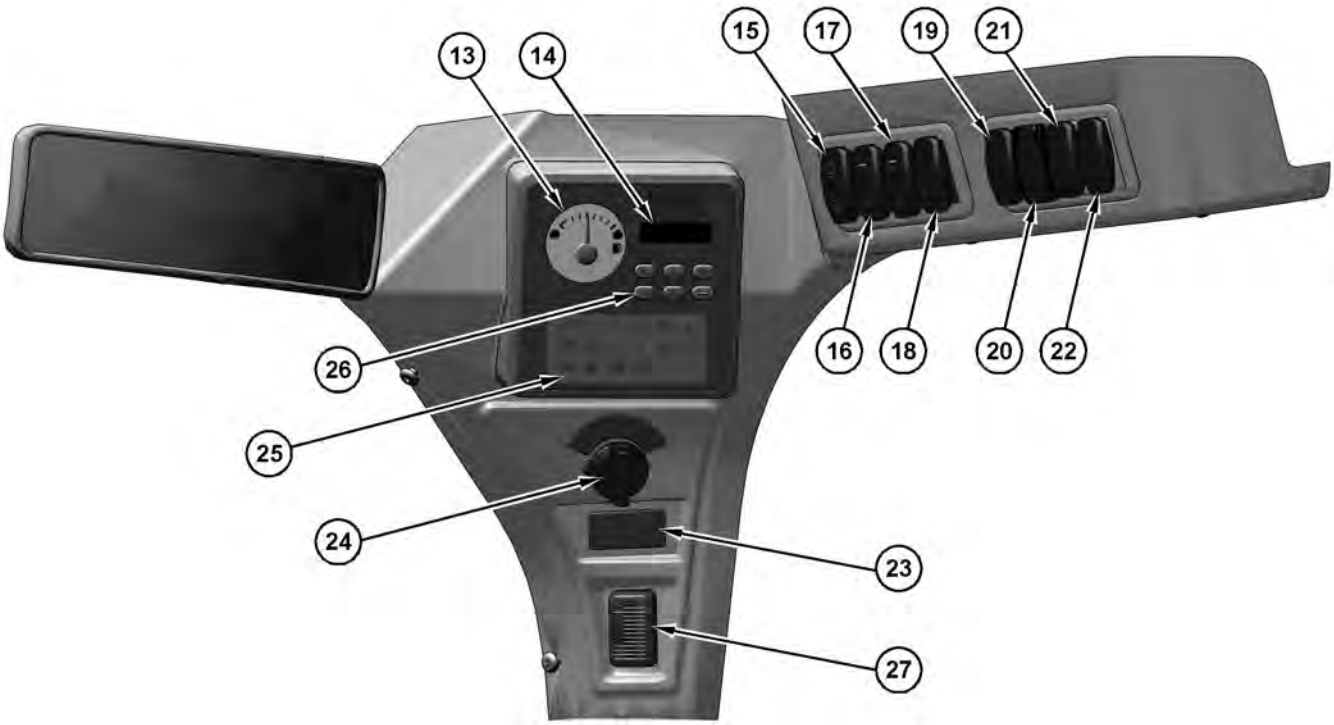

Illustration 156 g06354503

(13) Fuel gauge
(14) Service hour meter
(15) Hydraulic lockout
(16) Front working lights
(17) Rear working lights
(18) Continuous hydraulic flow
(19) Ride control
(20) Reversing fan
(21) Roading lights
(22) Hazard lights
(23) Turn Signal
(24) Engine speed control knob
(25) Alert indicator panel
(26) Anti-Theft security soft keys
(27) Bluetooth microphone

Fuel Level Gauge (13)

Fuel Level Gauge – The needle in the red range indicates low fuel.

Service Hour Meter (14)

Service Hour Meter – The service hour meter indicates the total number of hours the engine has been running. The service hour meter should be used to determine service hour maintenance intervals. This window will also display the Basic Machine Security information. See Basic Security Soft Keys.

Hydraulic Lockout (15)

Hydraulic Lockout – Press the top of the switch to disable the hydraulic functions. Press the bottom of the switch enable the hydraulic functions.

Note: Activate the hydraulic lockout when you are roading the machine to prevent unplanned movement of the work tool and the loader arms.

Note: If your machine is equipped with a Hydraulic Lockout switch only and the application requires the ability to override the hydraulic interlock system, see your Cat dealer to have a dual purpose switch installed

Hydraulic Lockout and Interlock Override (15 If Equipped)

Hydraulic Lockout – Press the top of the switch to disable the hydraulic functions. Return the switch to the middle position to activate the hydraulic functions.

Note: Activate the hydraulic lockout when you are roading the machine to prevent unplanned movement of the work tool and the loader arms.

Interlock Override – The interlock override allows the auxiliary hydraulic circuits to function with the armrest in the RAISED position. First bring the machine to a complete stop. Activate the continuous flow control. Press the bottom of the interlock override switch and release the switch to activate the interlock override function. To turn off the interlock override and continuous flow, press the bottom of the switch and release the switch again.

WARNING

Inadvertent movement of the work tool may occur if the interlock override function is used with work tools. This may result in personal injury or death. Only use interlock override function for hand-held work tools.

NOTICE

Before putting the machine into hydraulic interlock override, the work tool hydraulic lines must be connected to the machine couplers. Hooking hydraulic lines up with pressure will result in destroyed seals in the coupler and result in poor hydraulic performance.

Note: Certain work tools should not be operated with the hydraulic interlock system overridden. Consult your work tool Operation and Maintenance Manual for further information. If the machine will run a work tool where the presence of this switch represents a possible safety issue, see your Cat dealer to have the switch replaced with one having the Hydraulic Lock out feature only.

Note: The alert indicator for the parking brake will light when the interlock override is activated. When the interlock override is deactivated, press the parking brake switch to disengage the parking brake and activate the hydraulic functions.

Switch on the Cab Door

A switch is provided on the cab door that prevents the work tool from operating when the cab door is open. If the cab door is not installed or if the cab door is removed, the cab door jumper plug must be installed to operate a hydraulic work tool.

Note: The cab door jumper plug is located behind the seat on the left-hand side. The cab door jumper plug is cable-strapped to the cab harness near the point of use. To enable the work tool hydraulics with the front door removed, cut the cable strap securing the jumper plug to the cab harness, disconnect the front door harness from the cab harness behind the seat, and connect the front door jumper plug in place.

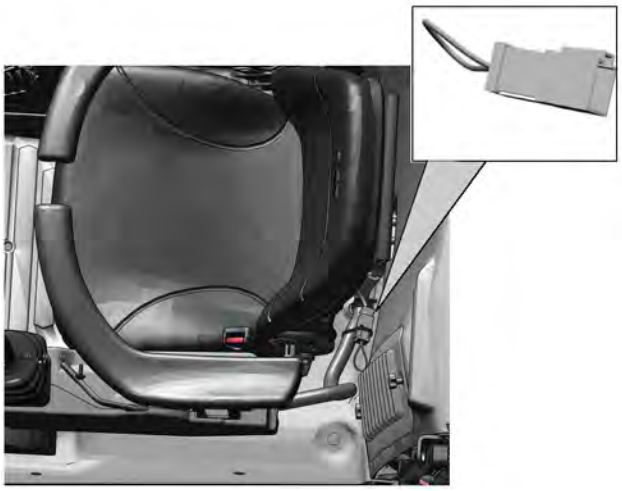

Illustration 157 g06354134

If the cab door jumper plug cannot be found, a plug can be assembled. Refer to M0069152, Assembly of Safety Bypass Plug for the Front Door on Compact Track Loaders, Multi-Terrain Loaders, and Skid steer Loaders for instruction on assembling the plug.

Front Work Lights (16)

Front Work Lights – Press the bottom of the switch to turn on the lights. Press the top of the switch to turn off the lights.

Rear Work Lights (17)

Rear Work Lights – Press the bottom of the switch to turn on the lights. Press the top of the switch to turn off the lights.

Continuous Flow Switch (18)

Continuous Flow – Continuous flow control (18) supplies continuous flow of hydraulic fluid to the auxiliary hydraulic circuit without continuously holding the auxiliary hydraulic control. Press the bottom of the continuous flow rocker switch. The continuous flow alert indicator will flash continuously indicating the system is in the “Continuous Flow Ready Mode” . Press either of the two auxiliary hydraulic switches (1) or (2) that are on the right-hand joystick. If equipped, you may also move the thumb wheel on the right-hand joystick to the desired flow position and hold either of these commands for several seconds. The continuous flow alert indicator will stop flashing and remain

lit continuously. Releasing the button or thumb wheel now will engage Continuous Flow Mode, providing flow to the auxiliary hydraulic circuit without further command input. To disengage continuous flow, either press the bottom of the continuous flow switch, press either of the two auxiliary hydraulic switches or operate the thumb wheel in either direction.

Ride Control (19)

Ride Control helps with smoothing the ride of the machine. Travel over rough terrain causes bucket movement. The ride control system uses the lift cylinders as shock absorbers. The lift cylinders dampen the forces from the work tool.

Ride Control – Press the bottom of the switch to turn on the ride control. Ride control will activate and the alert indicator will illuminate at the appropriate speed. Press the top of the switch to turn off the ride control.

Note: The ride control will deactivate and the indicator will not be illuminated at the appropriate speed. The ride control will also deactivate if the tilt function for the work tool is operated.

Default activation speed is approximately 8 km/h (5.0 mph) for wheeled machines and 6 km/h (3.7 mph) for tracked machines.

Note: If the Advanced Display is equipped, the Ride Control activation speed may be adjusted to better suit the application if needed. Refer to Operation and Maintenance Manual, “Right Side Controls (Alternate), Ride Control” for more information.

Reversing Fan (20)

The machine may be equipped with a reversing fan. Momentarily reversing the cooling fan direction aids in removing debris from the screened area of the engine enclosure, thereby improving air flow across the engine radiator and hydraulic oil cooler which may help the machine run cooler.

There are 3 modes for the reversing fan to function in, all functions are controlled by a switch in the cab.

- OFF position (normal demand fan operation) Switch CENTERED.
- AUTOMATIC position (this mode sets the fan to reverse at set intervals and duration set byCat dealer) Switches UP.
- MANUAL OVERRIDE position (a MOMENTARY SWITCH that allows the operator to force a set cycle to occur) Switch is pressed down and springs back up.

Note: The reversing cycle parameters for duration and frequency are user adjustable through the advanced display. See "Operator Controls, Right Side Controls (Alternate), Menu Screen, Operator Settings, Reversing Fan" for details. The reversing cycle parameters are dealer adjustable regardless of the monitor equipped.

- Default reversing cycle frequency is once every 30 minutes.

- Default reversing cycle duration is 8 seconds.

Roading Lights (21)

Roading Lights – Move the switch to the middle position to turn on the control panel lights and position lights. Press the bottom of the switch to turn on the front low beams. Press the top of the switch to turn off the lights.

Hazard Lights (22)

Hazard Flasher Control – Press the bottom of the switch to activate the hazard flashers. Press the top of the switch to deactivate the hazard flashers.

Turn Signals (23)

Turn Signals – Press the left of the switch to turn on the left turn signals. Press the right of the switch to turn on the right turn signals. Move the switch to the middle position to turn off the turn signals.

Engine Speed Control Knob (24)

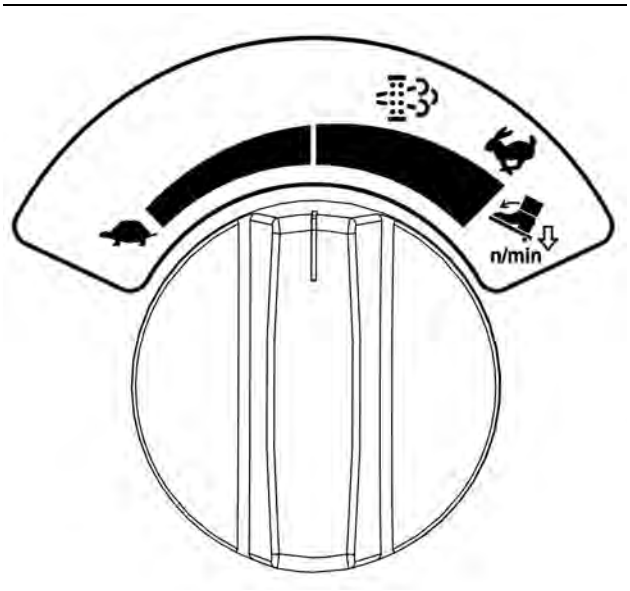

Illustration 158 g03818758

Use the knob to set the engine speed. Use the engine speed control knob when you want to set a constant engine speed. Move the knob clockwise to increase engine speed. Move the knob counter clockwise to decrease engine speed.

When the knob is fully clockwise, the engine speed control pedal, if equipped, become a deceleration pedal to lower engine RPM. The engine speed control pedal will temporarily override the engine speed control set point.

Note: The deceleration function will not lower the RPM to low idle. Do not use this function as a braking function.

Note: There are several features that may impact the low idle of the machine. Refer to Operation and Maintenance Manual, “Engine Starting” for more detailed information.

When the DPF light is on (if equipped), regeneration is needed. The operator can increase the engine speed to the active regeneration threshold. This is the green shaded area on the engine speed control knob that has the DPF symbol.

Refer to this Operation and Maintenance Manual, “Diesel Particulate Filter Regeneration”.

Alert Indicator Panel (25)

Illustration 159 g06354091

Basic electronic display window

Refer to the section Operator and Maintenance Manual "Alert Indicators" for a description about the status indicators.

Anti-Theft Security System Soft Keys (26)

Illustration 160 g06354085

Basic electronic display window

(14) Service hour meter window
(26) Anti-Theft Security System

Entering the Pin

If the Anti-Theft Security System is enabled, service hour meter window (14) will display “CODE” at machine start-up. This event occurs when key start switch (10) is moved to the ON position. Enter the secure PIN number using soft keys (26). Press the appropriate key to enter the secure code. For odd numerals (1, 3, 5, 7, or 9), press the appropriate key one time. For even numerals (2, 4, 6, 8 or 0), press the appropriate key twice. After the code is entered, press the arrow key to submit the code.

If the entered PIN number is correct, the machine service hours will display in the service hour meter window (14). Key start switch (10) may be moved to the START position to start the machine.

If the entered PIN number is incorrect, the window will flash the word “CODE” for several seconds before another attempt can be made.

Note: For security purposes, in the event an incorrect PIN is entered five times consecutively, the system will lock down for 15 minutes, during which period even a correct PIN will not allow the engine to crank. After the 15 minute lockdown period, entry of a correct PIN will unlock the system as usual.

Right Side Controls (Alternate)

Changing the Pin

The factory default PIN is "1111" and should be changed by the machine owner as soon as possible after enabling the Anti-Theft Security System. The PIN can be changed through the Standard Display to any 4-6 digit code. To change PIN, the system must be unlocked first by entering the current secure PIN, then simultaneously holding down the soft keys labeled "1/2" and "5/6" for 3 seconds. The system will prompt for a new "CODE" to be entered twice before accepting this as the new PIN.

Bluetooth Microphone (27)

This microphone may be set up with your mobile telephone to provide a hands-free method of communicating. See the operating manual of your mobile device for instructions of connecting with the Bluetooth microphone.

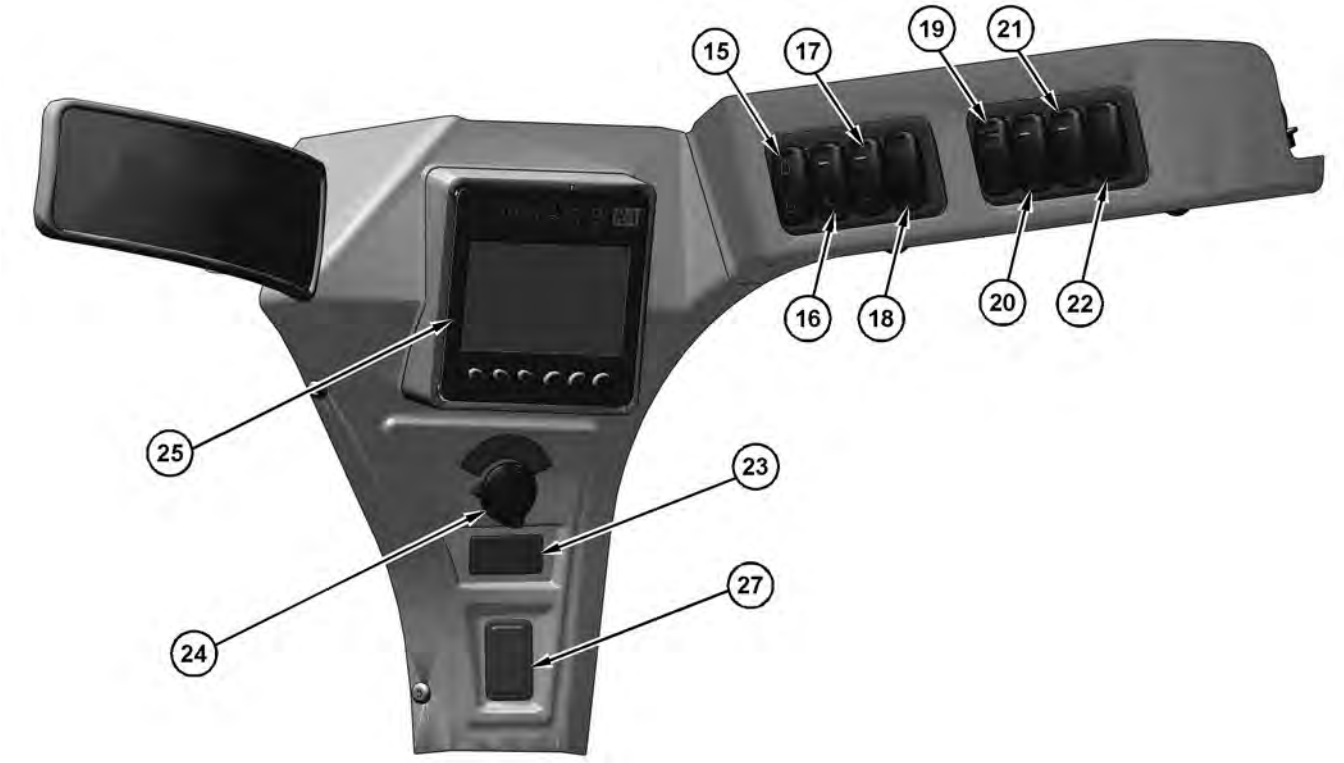

Illustration 161 g06353260

(15) Hydraulic lockout
(16) Front working lights
(17) Rear working lights
(18) Continuous hydraulic flow
(19) Ride control
(20) Reversing Fan
(21) Roading lights
(22) Hazard lights
(23) Turn Signal
(24) Engine speed control knob
(25) Advanced Display Module
(27) Bluetooth microphone

Advanced Display Module (If Equipped) (25)

Illustration 162 g06406125

Advanced electronic display window

(28) Dedicated Alert Indicators
(29) Soft Input Keys
(30) Display Window

The optional Advanced Display has several built-in features which are arranged into menu screens.

Dedicated Alert Indicators (28)

There are several dedicated alert indicator lamps located across the top of the Advanced Display. All other alert indicators will be icons located along the sides of the display window & will activate as needed. See "Alert Indicators".

Soft Input Keys (29)

There are six soft input keys located across the bottom of the Advanced Display. These keys are used to navigate among the various menu screens and to input operator selections within the menu screens. The functions will vary depending on the menu. The current function will be displayed as an icon on the display window directly above the key.

Display Window (30)

The Display window will display the welcome screen, the main monitoring screen, and the various menu and adjustment screens. The display window will also become the Backup Camera monitor when that feature is active. See "Backup Camera Mode".

Monitoring Screen

The monitoring screen is the primary screen that displays information to the operator during most operations. Several background color schemes and gauge layouts are available for selection by the operator. See "Menu Screen, Display Settings".

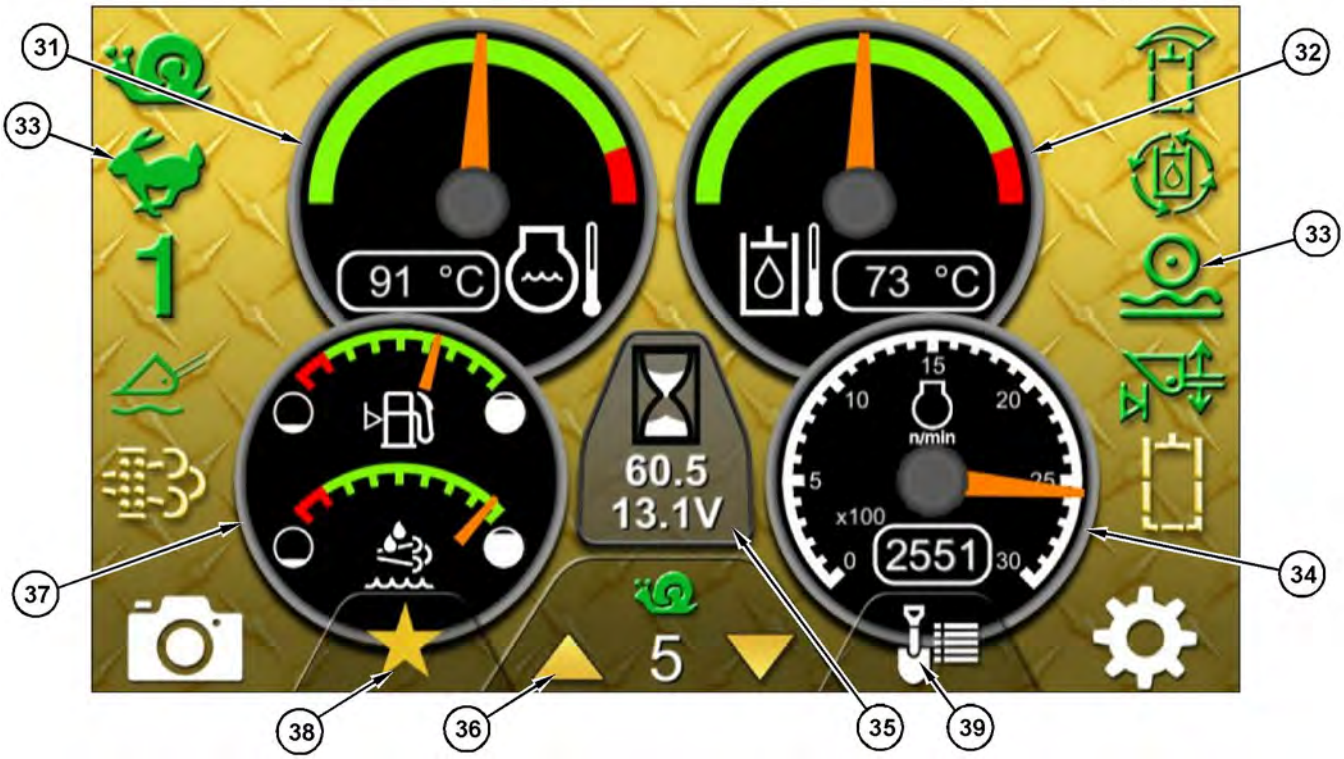

Illustration 163 g06452775

Default layout of monitoring screen

(31) Engine Coolant Temperature Gauge
(32) Hydraulic Oil Temperature Gauge
(33) Alert Indicators
(34) Engine Speed Gauge
(35) Service Hour Meter
(36) Creep Controller
(37) Fuel and Diesel Exhaust Fluid (DEF) Level Gauge and SCR Warning Alert Indicator
(38) Favorites
(39) Smart Attachment Portal

Engine Coolant Temperature Gauge (31)

Illustration 164 g06406181

The needle in the red zone indicates that the engine coolant temperature is too high. If the gauge numerical values are enabled, the background will change from black to red to indicate that the engine coolant is approaching an unsafe temperature. The machine should be stopped soon and the engine set to low idle to allow the engine to cool. See "Operator Settings, Digital Readout".

Hydraulic Oil Temperature Gauge (32)

Illustration 165 g06406186

The needle in the red zone indicates that the hydraulic oil temperature is too high. If the gauge numerical values are enabled, the background will change from black to red to indicate that the hydraulic oil temperature is approaching an unsafe temperature. The hydraulics functions should be stopped soon and the engine set to low idle to allow the hydraulic system to cool. See "Menu Screen, Display Setting, Digital Readout".

Alert Indicators (33)

Illustration 166 g06406191

There are several alert indicator icons located along the sides of the display window & will activate as needed. See "Alert Indicators" for a description of the warnings.

Engine Speed Gauge (34)

Illustration 167 g06406197

The needle in the red zone indicates that the engine RPM is too high. If the gauge numerical values are enabled, the background will change from black to red to indicate that the engine speed is above the allowable HIGH IDLE limit. The throttle should be turned down to the acceptable range. The CAT dealer should be contacted to determine the cause. See "Display Settings, Digital Readout".

Service Hour and Battery Voltage Meter (35)

Illustration 168 g06406208

The service hour meter indicates the number of engine running hours for the machine. The hours should be used to determine which maintenance interval service items to perform. The hourglass icon blinks slowly when the engine is running indicating that hours are being accrued. The hour meter also indicates the current battery voltage.

Creep Controller (36)

Illustration 169 g06406224

This controller will be displayed when “Creep Control” is engaged. Reference the section, "Operator Controls, Joystick Controls". This controller allows the operator to adjust the creep setting from the main screen without having to enter the Creep Control sub screen. See the section, "Menu Screen, Operator Settings, Creep Control".

Note: The optional Advanced Display module is required for Creep Control feature.

Fuel and Diesel Exhaust Fluid (DEF) Level Gauge and SCR Warning Alert Indicator (37)

Illustration 170 g06406242

The fuel level gauge indicates the amount of fuel that remains in the fuel tank. The needle in the red range indicates low fuel.

On machines which require diesel exhaust fluid (DEF), this gauge will contain two independent needles. The top needle will indicate the amount of fuel that remains in the fuel tank. The bottom needle will indicate the amount of DEF that remains in the DEF tank.

Note: DEF will be consumed at a significantly slower rate than diesel fuel.

The icon below the DEF gauge is designated the SCR Warning alert indicator. The status of this lamp will vary based on the SCR warning levels. Refer to Operation and Maintenance Manual, “Selective Catalytic Reduction Warning System” for complete details.

Favorites Icon (38)

Illustration 171 g06406246

There are several settings within the "Machine Settings" and "Display Settings" menus that may be selected as the "Favorite". This setting is useful for quickly recalling an often used setting without having to navigate the menu system in the normal manner.

Illustration 172 g06406250

Anytime an open star icon appears over the right most soft key, the currently highlighted setting may be chosen as the "Favorite" by pressing the soft key. The open star icon will become solid indicating that setting is now the "Favorite".

When a "Favorite" is established, a solid star icon will appear above one of the soft keys anytime the main monitoring screen is the active display. Pressing this soft key will immediately jump the user to the sub menu where the "Favorite" setting is located and highlight the setting.

Pressing the right most soft key while any other eligible setting is highlighted will make this setting the new "Favorite". Pressing the right most soft key while the current favorite is highlighted will turn the "Favorite" off, indicated by changing the solid star icon back to an open star.

Note: There can only be one "Favorite" at any time.

Smart Attachment Portal (39)

Illustration 173 g06452816

The menu screens for smart attachments are accessed from the Monitoring Screen by pressing the soft key under this icon. The portal to smart attachment screens is only available when the machine ECM detects the presence of a smart attachment via the machine's electrical connector. The smart attachment monitoring and adjustment screens will vary depending on which attachment is connected.

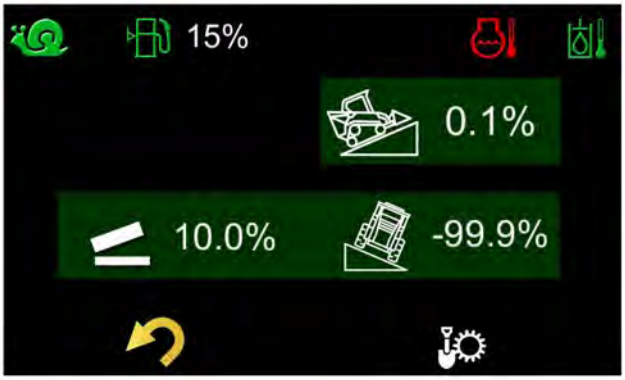

Illustration 174 g06452823

Example: Monitoring Screen

Illustration 175 g06452831

Example: Adjustment Screen

Note: A detailed description of the smart attachment monitoring and adjustment screens will be found in the attachment's Operation and Maintenance Manual..

Smart Creep and Stall Reversal

Smart Creep

The Smart Creep feature is used automatically to adjust the machine's ground speed while running auxiliary attachments to maximize productivity and minimize stalling as ground conditions change.

Note: Smart Creep requires the machine be equipped with the optional Advanced Display (machine monitor) and a work tool equipped with Smart Creep technology.

Note: Smart Creep may require later versions of both machine and display software than the machine was built with. Contact your Cat dealer to ensure that your machine software is up to date.

Illustration 176 g06708543

To utilize the smart creep feature, make sure that the smart creep function is enabled and the attachment is properly identified in the advanced display.

Illustration 177 g06708548

Home Gauge Screen

From the home gauge screen, press the shovel icon button to get to the smart creep monitoring screen.

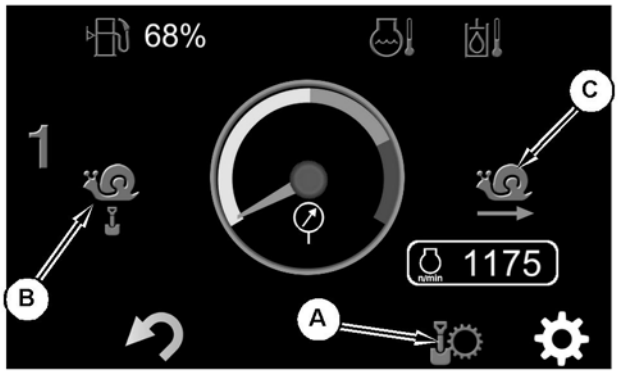

Illustration 178 g06708555

Smart Creep Monitoring Screen

(A) Shovel/Cog Icon
(B) Smart Creep Enabled Icon
(C) Stall Reversal Enabled Icon

Press the shovel/cog icon to get to the smart attachment settings screen.

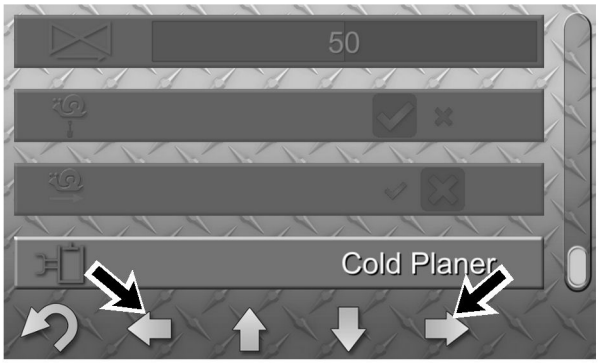

Illustration 179 g06708567

Attachment Selection

Use the left and right arrows to select the type of smart attachment being used (ie. Cold Planer, Snowblower, Wheel Saw, Trencher, etc.).

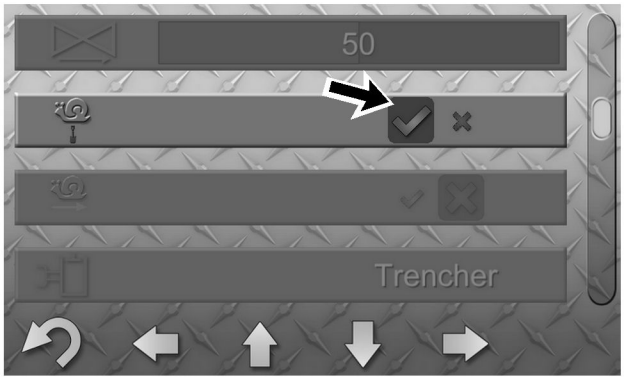

Illustration 180 g06708571

Smart Creep Enabled

Select the green check mark next to the smart creep icon to turn this feature ON.

With the feature on, enable continuous flow and start operating the work tool normally. Refer to Operation and Maintenance Manual, Operator controls, Continuous Flow Switch. Turn on machine creep by pressing the creep button on the left-hand joystick and select your preferred creep speed using the arrows on the display's creep controller. Refer to Operation and Maintenance Manual, Operator controls, Creep Control.

Drive the machine in the primary working direction, holding the drive joysticks fully displaced. Smart creep will make the necessary adjustments to avoid engine lug and work tool stall. Smart creep will reduce ground speed as necessary to maintain productivity without stalling, but the maximum ground speed is limited by the user-selected creep speed setting.

Utilize the pressure gauge on the Smart Creep Monitoring screen to maximize work tool efficiency.

- A needle in the yellow range indicates that the attachment is running at lower than optimal pressure, and productivity may be increased by increasing the creep speed setting.
- A needle in the green range indicates that the attachment is running at the optimal pressure for maximum productivity. No further action is required.

- A needle in the red zone indicates that the attachment is running at higher than optimal pressure and may be on the verge of stalling. The engine may start lugging before smart creep slows the machine down. In this case, reduce the creep speed setting or hydraulic aggressiveness factor to reduce engine lug and keep the attachment turning at optimum speed.

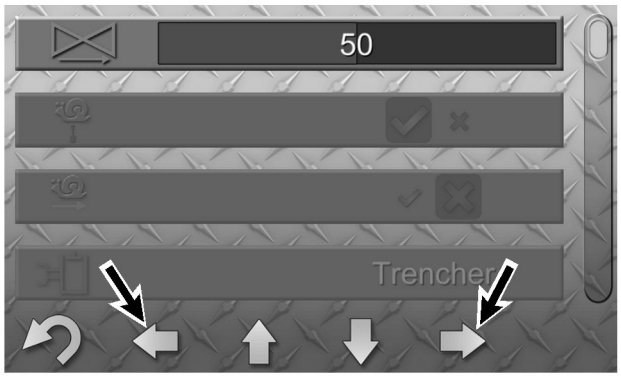

Illustration 181 g06708592

Smart Creep Aggressiveness Adjustment

Use the left and right arrows to adjust the aggressiveness of the smart creep control. The default value is 50. A value lower than 50 will reduce the aggressiveness and a value higher than 50 will increase the aggressiveness. Lower the value if the pressure gauge needle runs consistently in the red zone.

Stall Reversal

Illustration 182 g06708595

The stall reversal feature is a subset of smart creep and will automatically momentarily reverse the direction of travel after the work tool stalls, allowing work tool to recover speed without further operator input.

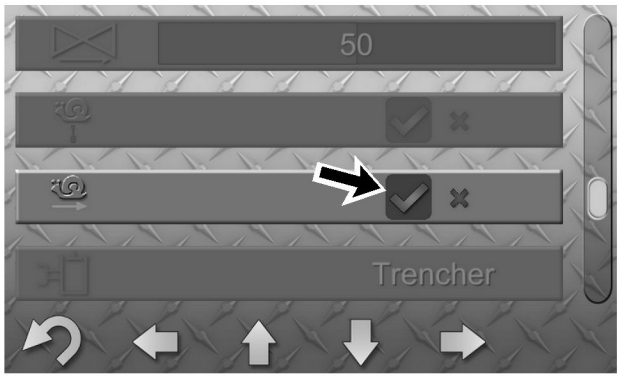

Illustration 183 g06708597

Stall Reversal Enabled

Select the green check mark next to the stall reversal icon to turn this feature ON.

Note: Smart Creep mode must be enabled to use Stall Reversal.

To use stall reversal, make sure that smart creep and stall reversal are both turned on in the advanced display within the smart attachment settings screen. With stall reversal on, operate with smart creep, as described above.

If the attachment does stall, continue to hold the joysticks in the primary working direction. The stall reversal feature will automatically momentarily reverse the machine's travel direction to relieve the stall. The machine will then revert to traveling in the primary working direction without further operator input.

If the stall cannot be relieved automatically, stall reversal will stop attempting to help and the operator will need to manually relieve the stall.

Machine Setting Menu

Illustration 184 g06406271

The “Machine Settings” menu allows the operator to adjust several machine response and performance settings. These settings will be stored under each operator profile. When the Anti-Theft Security System is enabled, the settings take effect each time an Operator Code is entered at the log in prompt. If the Anti-Theft Security System is not enabled, the operator settings at the time of the previous KEY OFF will remain in effect. See "Anti-Theft Security System".

Drive System Sensitivity

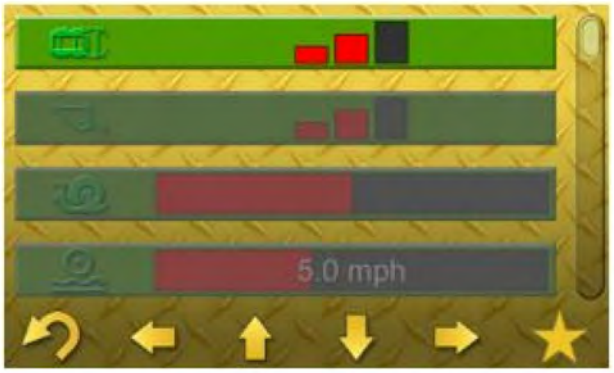

Illustration 185 g06406281

This parameter is used to change the “Drive Control Mode” which has three settings.

Standard Mode – 1 bar

Intermediate Mode – 2 bars

Maximum Mode – 3 bars

Note: Intermediate Mode (two bars) is the factory default setting.

Note: The Drive Control Mode setting will not return to the factory default level when the ignition key switch is turned OFF.

Note: The machine will start, stop, and steer more aggressively with each progressive drive control mode. Test drive the machine in an open area to become familiar with the new operating characteristics of the machine.

Implement System Sensitivity

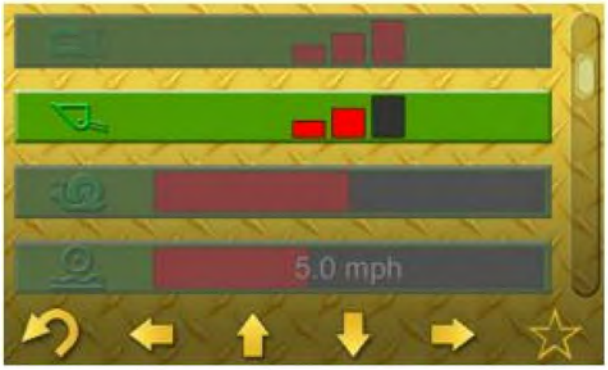

Illustration 186 g06406285

This parameter is used to change the “Implement Control Mode” which has three settings.

Fine Control Mode – 1 bar

Standard Mode – 2 bars (factory default)

Coarse Control Mode – three bars

Note: The Implement Control Mode setting will not return to a default level when the ignition switch is turned OFF.

Note: The machine lift arms and work tool coupler will move more aggressively with each progressive implement control mode. Test the implement functions in an open area to become familiar with the new operating characteristics of the machine.

Creep Control

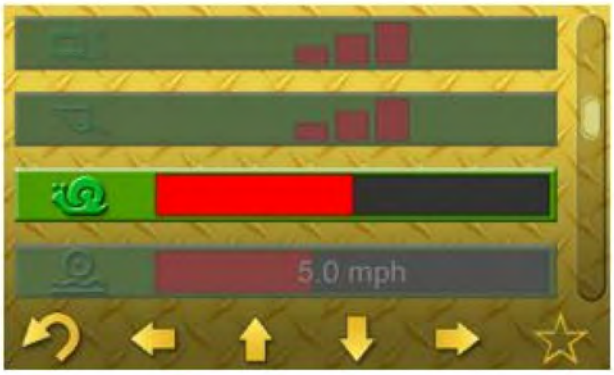

Illustration 187 g06406310

The Creep Control allows the operator to set a maximum machine travel speed at full joystick movement. Use Creep control for operations that require slow, constant speed independent of engine idle speed. The Creep Control has 20 settings:

Slowest Setting – 1 bar

Default Setting – 5 bars

Fastest Setting – twenty bars

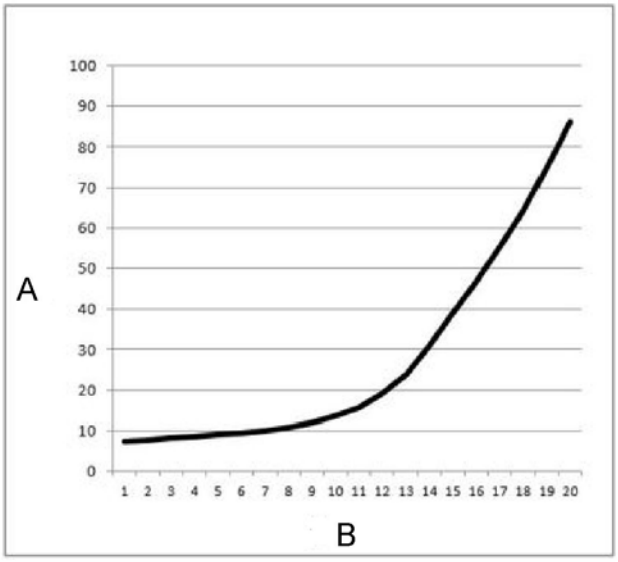

Illustration 188 g06311375

Creep Speed Map

(A) % of Maximum Travel Speed
(B) Creep Speed Setting

Note: The machine may not travel at the lower settings depending on terrain, work tool, load, etc. If the machine does not travel at a particular setting, increment the Creep Control to progressively higher values until travel occurs.

Note: The optional Advanced Display module is required for Creep Control feature. See "Monitoring Screen, Creep Controller "

Ride Control

Illustration 189 g06406319

Ride Control improves the ride quality & material retention over rough terrain while carrying heavy loads by essentially using the lift cylinders as shock absorbers.

The “Ride Control Adjustment” allows the operator to change the activation speed at which the system engages when the Ride Control system is ON. Refer to Operation and Maintenance Manual, “Operator Controls, Right Side Controls”. The adjustment can be made in 0.1 km/h (0.06 mph) increments.

Default activation speed is approximately 8 km/h (5 mph) for wheeled machines and 6 km/h (3.7 mph) for tracked machines.

Steering Drift Correction

Illustration 190 g06452852

NEUTRAL (No Correction)

The "Steering Drift Correction Adjustment" allows the operator to make fine adjustments to straight-line travel to account for things like tire mismatch, drive chain tension differences, normal drive motor wear. The adjustment is offered in 10 fine increments to correct either a left or right bias. Adjust the feature left for a machine that drifts to the right. Adjust the feature right for a machine that drifts to the left.

Illustration 191 g06453166

LEFT Correction

Illustration 192 g06453195

RIGHT Correction

Machine Speed Limit

Illustration 193 g06406337

The “Machine Speed Limit Adjustment” allows the maximum travel speed to be limited. The adjustment can be made in 1% increments from 20% to 100% of the machine's maximum travel speed.

Note: If the Anti-Theft Security System is enabled, a user logged in under an Operator Code will only be allowed to adjust this setting up to the value stored in the Master Profile. See "Menu Screen, User Management, Master Code, and Operator Code".

Note: At some of the lower Speed Limit settings, 2-speed shifting may be automatically disabled.

Reversing Fan Frequency

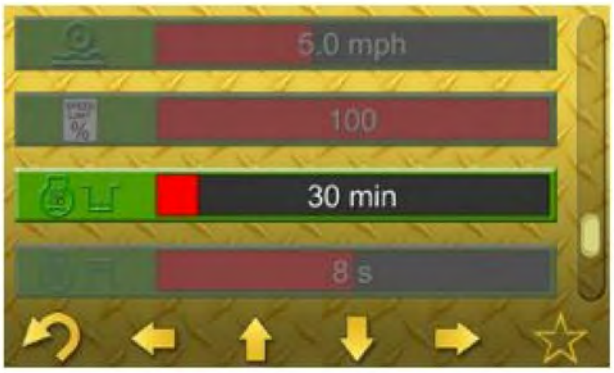

Illustration 194 g06406644

Reversing Fan Operation Interval Time is adjustable between 6 minutes and 240 minutes. This is the time between reverse cycles in the automatic mode. The lower the setting, the more frequent the reverse cycle will occur. The factory default is 30 minutes.

Note: The fan is more effective at cooling the machine's engine coolant and hydraulic oil in the forward direction. Running the fan in reverse too frequently may contribute to machine overheating events.

Reversing Fan Duration

Illustration 195 g06406655

The "Reversing Fan Duration" is adjustable between 5 seconds and 12 seconds. This time is the duration of each reverse cycle in the automatic mode. The fan will automatically return to the forward air flow direction after each reverse cycle. The factory default is 8 seconds.

Display Settings

Illustration 196 g06406679

The "Display Settings" menu allows the operator to adjust several aspects regarding the look of the display. These adjustments will be stored under each operator profile. When the Anti-Theft Security System is enabled, the settings take effect each time an Operator Code is entered at the log in prompt. If the Anti-Theft Security System is not enabled, the operator settings at the time of the previous KEY OFF will remain in effect. See "Anti-Theft Security System".

Units

Illustration 197 g06406687

The "Units Adjustment" allows the operator to switch between Metric and English units. The factory default is English.

Language

Illustration 198 g06406697

The “Language Adjustment” allows the operator to switch the display messages among six languages: English, Spanish, French, German, Portuguese, and Italian. The factory default is English.

Digital Readout

Illustration 199 g06406703

Illustration 200 g06406715

The “Digital Readout” allows the operator to either have the numerical gauge values display turned ON or OFF. The factory default is ON.

Gauge Layout

Illustration 201 g06406792

Illustration 202 g06406841

The “Gauge Layout Adjustment” allows the operator to select the Main Monitor Screen display from several available layouts. See “Monitoring Screen”. The factory default is Gauge Layout 1. A unique night time scheme is represented by the “moon” icon:

Background

Illustration 203 g06406844

The "Background Adjustment" allows the operator to select the background color of the display from several available colors.

Enable Backup lines

NOTICE
Use of backup camera lines do not replace the basic safety precaution and procedures for machine operation in reverse.

The “Enable Backup Lines Adjustment” allows the operator to turn on reference lines when the display is in Backup Camera Mode. The Machine Width reference lines, provide an approximate indication of the backup path of the machine in a straight line. The Rear Distance reference marks provide an approximate gauge of how close objects are to the rear of the machine.

Illustration 204 g06406850

Enable Backup Lines Setting

Select the green “check mark” icon to enable the backup lines. Select the red “X” icon to disable the backup lines.

Note: The backup lines should never replace visually ensuring the area behind the machine is free of objects before traveling in reverse. The backup lines may be adjusted by the operator preferences. See "Display Settings, Adjust Backup Lines".

Adjust Backup Lines

NOTICE
Use of backup camera lines do not replace the basic safety precaution and procedures for machine operation in reverse.

If the Backup Lines are enabled, the “Adjust Backup Lines Adjustment” screen provides the user various adjustments for both the Machine Width reference lines and Rear Distance reference marks.

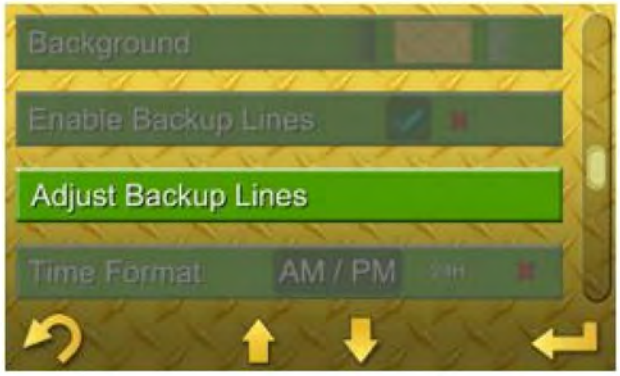

Illustration 205 g06406857

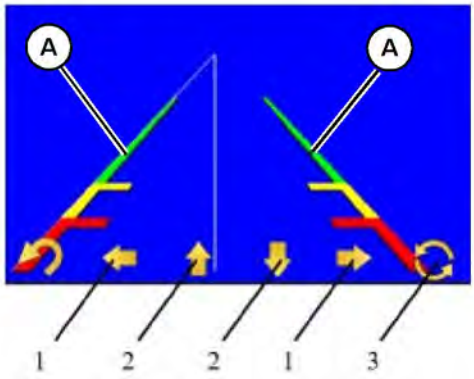

Illustration 206 g06406882

Machine Width Reference Lines Adjustment

(A) Machine Width Reference Lines
(1) Left/Right Position Adjustments
(2) Angle Adjustments
(3) Adjustment Toggle

The position of the Machine Width reference lines may be adjusted left and right, and the angle of each increased or decreased independently to suit the operator. Refer to 206 . Is recommended to align the Machine Width reference lines with the outside of the machine's tracks or tires and parallel to the machine. A long straight edge, tape, curb, etc. may be useful during this adjustment.

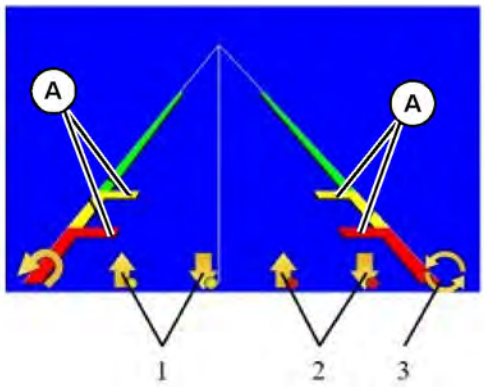

Illustration 207 g06406935

Rear Distance Reference Marks Adjustment

(A) Rear Distance Reference Marks
(1) Yellow Marks Adjustments
(2) Red Marks Adjustments
(3) Adjustment Toggle

The position of the Rear Distance reference marks may be adjusted in and out (or nearer to and farther from) regarding the rear of the machine to suit the operator. Refer to 207 . Is recommended to set these reference lines known distances from the machine's rear door. A pair of cones, flags, paint marks, ect. may be useful during adjustment.

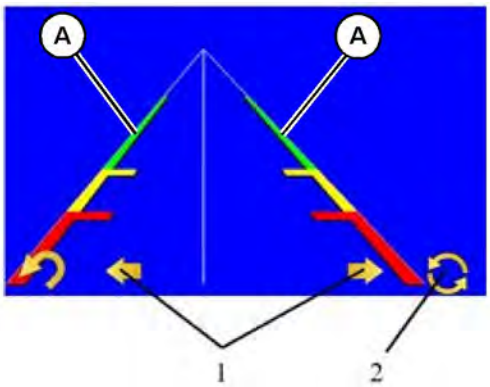

Illustration 208 g06406948

Reference Lines Skew Adjustment

(A) Reference Lines
(1) Left and Right Skew Adjustment
(2) Adjustment Toggle

The left-to-right skewness of the reference lines may be adjusted to account for the off-center location of the backup camera on some models. Refer to 208 .

Note: The backup lines should never replace visually ensuring the area behind the machine is free of objects before traveling in reverse.

Note: The meaningfulness of the backup lines depends greatly on the position and angle of the backup camera, which can change over time. The backup lines should be checked or readjusted periodically. Each operator should be aware of the backup lines and understand the backup lines relative meaning on the machine.

Time Format

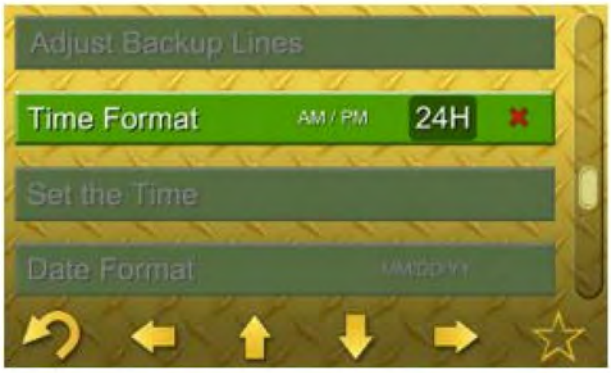

Illustration 209 g06406956

The "Time Format Adjustment" allows the operator to select a 12 hr AM/PM, 24 hr clock format, or disable the clock from appearing.

Set the Time

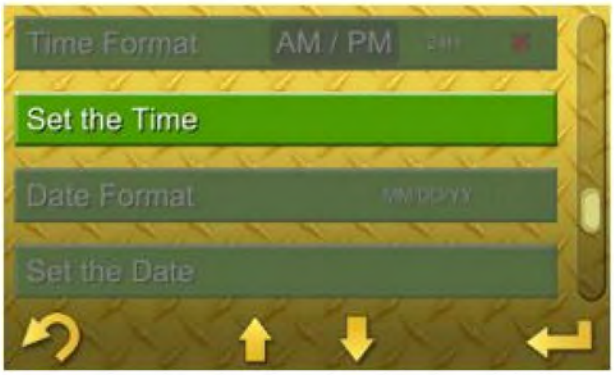

Illustration 210 g06406963

Illustration 211 g06406972

The "Set the Time Adjustment" allows the operator to set the current time of day.

Data Format

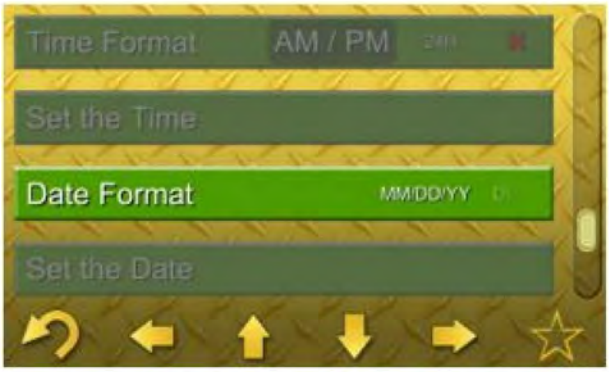

Illustration 212 g06406997

The "Date Format Adjustment" allows the operator to select between three date formats: MM/DD/YY, DD/MM/YY, or YY/MM/DD.

Set the Date

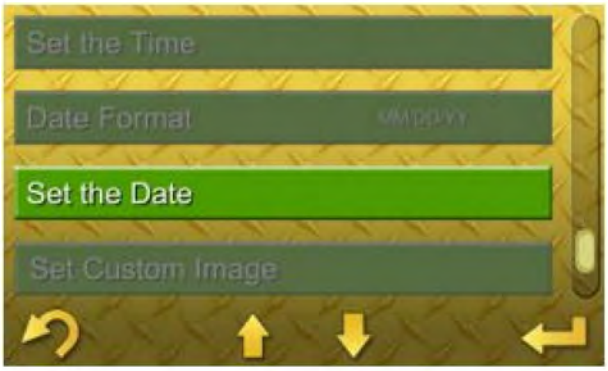

Illustration 213 g06407001

Illustration 214 g06407005

The "Set the Date Adjustment" allows the operator to set the current date.

Set Custom Image

Illustration 215 g06407230

This screen allows the owner to upload a custom image that will be used as the "splash" screen image which is visible while the display boots up after each key ON. The image is loaded via a USB thumb drive plugged into the machine's USB port. The image must be either a .jpeg, .jpg, or .png file and formatted 800 x 400 for best fit. See "Operator Controls, Left Side Controls, Power Supply Port".

Security Grace Period

Illustration 216 g06407237

If Machine Security is enabled, the "Security Grace Period Adjustment" allows the user to select from several choices of grace periods, which will determine how long the machine remains unsecured once Keyed OFF. The grace period timer begins at Key OFF and during the grace period, the machine will not require reentry of a PIN when Keyed ON again.

The available grace periods are 15 min, 30 min, 1 hr, 2 hrs, and 4 hrs. The factory default is 30 min. A user logged in via a Master Code may select any of the available grace periods. A user logged in via an Operator Code will only be allowed to adjust this value up to the grace period stored in the Master Profile. See "Anti-Theft Security System ", "User Management, Master Code" and "User Management, Operator Code" in this section.

Dealer Name

Illustration 217 g06407244

The “Dealer Name” setting allows the owner to enter a Dealer Name or any other combination of text and numerals. The entry is displayed momentarily on the Welcome Screen each time the machine is “KEYED ON” . This adjustment requires a Master Code to access once a Master Code has been established. An Operator Code will not allow access to this adjustment. See "User Management, Master Code, and Operator Code".

Dealer Phone

Illustration 218 g06407264

The “Dealer Phone” setting allows the owner to enter a Dealer Phone Number or any other combination of numerals. The entry is displayed momentarily on the Welcome Screen each time the machine is “KEYED ON” . This adjustment requires a Master Code to access once a Master Code has been established. An Operator Code will not allow access to this adjustment. See "User Management, Master Code, and Operator Code".

Job Clock Menu

Illustration 219 g06407272

This screen allows the operator to start, stop, and reset a job clock. The job clock saves over the key cycle and starts up automatically on the next startup or operator login. A separate job clock is stored under each operator profile.

Illustration 220 g06407297

Information Screen

This screen will display various system-related information including the following items:

- Machine Serial Number
- Engine ECU hardware and software part number
- Advanced Display hardware and software part number

This information can be shared with the Cat Dealer to ensure that the machine has the latest software installed to take advantage of any improvements developed since the machine was manufactured.

Service Menu

Illustration 221 g06407319

The “Service Menu” is composed of several sub menus which allow the user to access valuable information about the machine. These sub menus are described below:

Diagnostics Sub Menu

Illustration 222 g06407368

The screens within this sub menu allow the user to view active (currently occurring) or logged (having occurred; may be active or no longer active) machine condition warnings.

Diagnostics & Events

Diagnostic Codes indicate that a sensor or hardware component is currently faulted (Active Diagnostic), or has faulted previously (Logged Diagnostic) and machine functionality may be impacted.

Event Codes indicate that a sensor is detecting (Active Event), or has previously detected (Logged Event) a condition that could result in machine damage if not corrected as soon as possible.

There are three levels of Diagnostic and Event Codes indicating the relative severity of the warning. The pop-up screens will change color depending on the warning level.

Level 1 – A condition is trending in a direction that may indicate that damage could occur if the operating condition persists. There is no pop-up screen displayed for this level but the Driver Alert Indicator will illuminate continuously. The diagnostic or event code will be shown on a green background in these screens. The operator should stop the machine at the earliest convenience and investigate the cause. If no additional alert indicators are illuminated, contact your Cat dealer or refer to the service manual for more information. See "Alert Indicators".

Level 2 – A condition has been detected which could result in component damage. A yellow pop-up screen will be displayed providing information on the condition. The Driver Alert will be flashing but no cab alarm will be audible. The diagnostic or event code will be shown on a yellow background in these screens. The operator should change operation or perform the indicated maintenance being displayed. See "Alert Indicators"

Level 3 – A condition has been detected that is likely to result in severe component damage and could result in injury. A red pop-up screen will be displayed providing information on the condition. The Driver Alert will be flashing and the cab alarm will be audible. The diagnostic or event code will be shown on a red background in these screens. The operator should stop the machine immediately and perform the indicated maintenance being displayed or contact your Cat dealer. See "Alert Indicators".

Preventative Maintenance Sub Menu

Illustration 223 g06407404

The "Preventative Maintenance" interval screens are pop-up reminders to indicate that a scheduled maintenance interval is approaching. These intervals are based on machine hours and can be reset by the owner after the maintenance is performed. The screens will provide the operator several pieces of information including:

Maintenance Item – The item to be checked or changed

Interval Hours – The service interval or machine hours between repeated services.

Hours Remaining – The number of machine hours remaining before the service item becomes past due.

Activation Hours – The actual value of the machine hours when the service is due

Reset – Select this icon to reset the maintenance interval after a service has been performed.

Illustration 224 g06407445

Note: Only the Master account can reset the maintenance interval.

Status Parameters Sub Menu

Illustration 225 g06407468

The " Status Parameters" screen shows the status of some of the most important machine parameters such as throttle position, engine speed, joystick position, battery voltage, drive motor speed. The parameter status information may be useful for basic troubleshooting.

Illustration 226 g06407473

Information Sub Menu

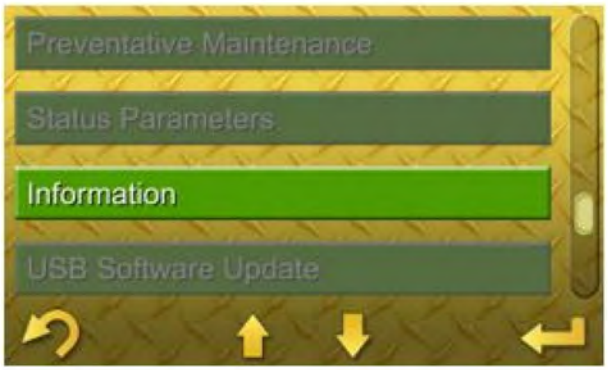

Illustration 227 g06407485

This screen will display various system-related information including the following items:

- Machine Serial Number
- Engine ECU hardware and software part number
- Advanced Display hardware and software part number

Illustration 228 g06407487

This information can be shared with the Cat Dealer to ensure that the machine has the latest software installed to take advantage of any improvements developed since the machine was manufactured.

Service Screens

The service menu is composed of the following screens.

Status Parameters – Allows for viewing the status of some of the most important machine parameters such as throttle position, engine speed, joystick position, battery voltage, drive motor speed. The parameter status information may be useful for basic troubleshooting.

USB Software Update – Allows for the Cat dealer to service the Advanced Display software as needed.

Set Custom Image – Allows the owner to upload a custom image that will be used as the "splash" screen image which is visible while the display boots up after each key ON. The image is loaded via a USB thumb drive plugged into the machine's USB port. The image must be either a .jpeg, .jpg, or .png file and formatted 800 x 400 for best fit. See "Operator Controls, Left Side Controls, Power Supply Port".

USB Software Update Sub Menu

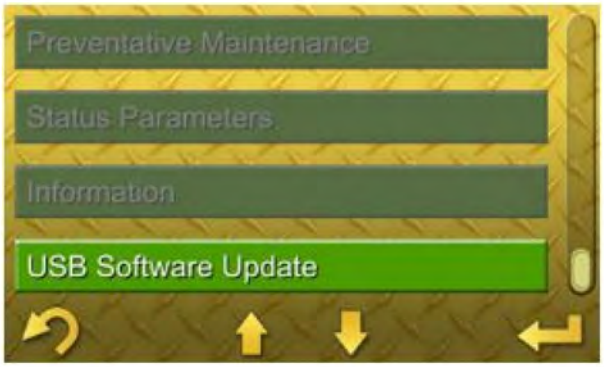

Illustration 229 g06407494

The "USB Software Update" screen allows for the Cat dealer to service the Advanced Display software as needed.

User Management

Illustration 230 g06407501

On machines equipped with the latest Advanced Display software, security may be enabled by the user under this menu. Security may always be enabled by the Cat dealer regardless of machine configuration. See "Anti-Theft Security System" in this section.

Illustration 231 g06407509

If security has been enabled, the User Management menu screens allow the addition, deletion, and editing of operator profiles as well the viewing and resetting of machine or operator-specific information. There are two types of profiles. The Master Profile, which is accessed by entry of the Master Code during the log-on sequence, and one or more Operator Profiles, which are accessed by entry of an Operator Code. Entry of either a Master Code or an Operator Code will yield specific rights regarding the viewing & editing capability of information.

Master Code

Illustration 232 g06407516

The default Master Code is "1111" and is established when the Anti-Theft Security System is first enabled. This code should be changed by the owner as soon as possible as a security best practice. Options available in the User Management menu while logged in under the Master Code are as follows:

View – The master operator can view and edit the following information for each operator profile.

- An operator profile name up to 15 ASCII characters

- The total machine hours accrued while the operator has been logged in.
- Total Fuel used while the operator has been logged in (electronic engines only).
- The Total Machine Hours and Total Fuel Used may be reset independently.
- The Event and Diagnostic Codes that have occurred while the operator has been logged in.

Add Operator – Allows the Master Operator to add an operator profile and set the Operator Name and Operator Code

Delete Operator – Allows the Master Operator to delete an operator profile. The Master Operator cannot be deleted.

Edit Operator – Allows the Master Operator to Change the current Operator Name and Operator Code.

Set the Time and Date – Allows the Master Operator to set the current time and date.

Restore Default Settings – Allows the Master Operator to restore the factory machine settings of either the Master Profile (Restore My Default Settings), or the Master Profile, and all Operator Profiles (Restore All Default Settings).

Note: The settings that exist in the Master Profile for Security Grace Period, and machine Speed Limit will be the maximum allowable values for all Operator Profiles. A user logged in via an Operator Code will only be allowed to adjust these settings between the factory allowable minimum value and the value in the Master Profile. See "Operator Settings, Speed Limit" and "Operator Settings, Security Grace Period" in this section.

Operator Code

Illustration 233 g06407523

Operator Profiles are only available for creation while logged in under the Master Code. During creation of an Operator Profile, a unique Operator Code should be chosen. Options available in the User Management menu while logged in under an Operator Code are as follows:

View – The Operator can view the following information for the currently logged in operator.

- The name of the current operator
- The total machine hours accrued while the operator has been logged in.
- Total Fuel used while the operator has been logged in (electronic engines only).
- The Display Event and Diagnostic Codes that have occurred while the operator has been logged in

Edit Operator – Allows the Operator to Change the current Operator Name and Operator Code.

Note: When switching between profiles, the Security Grace Period must be allowed to expire before the next key ON. An event will prompt for entry of a log-on code. The grace period set by the current profile may be ignored at key OFF by selecting the soft key under the green check mark symbol. This selection will secure the machine within about 30 seconds, allowing for faster switching between profiles.

Illustration 234 g06407535

Key Off “Lock Out” Prompt

Red “X” or No Action – Grace Period Applies

Green Checkmark – Grace Period Overridden

Anti-Theft Security System

This feature if enabled requires an operator to enter a valid Operator Code before allowing the engine to crank. There is one Master Code and up to 50 unique Operator Codes. Entry of a valid code will also automatically load Operator Settings that have been previously saved under the current operator profile. See "Menu Screen, Operator Settings". At key "ON", if the security system is enabled and locked, the operator will be prompted to enter a unique 4-digit to 6-digit Operator Code. Enter the pin code using the soft keys. Press the appropriate key once for the odd numeral (1, 3, 5, 7, or 9). Press the key twice quickly for the even numerals (2, 4, 6, 8 or 0). After the code is entered, press the "enter" key to submit the code. If the code is incorrect, the Display Window will show "Invalid Code" and another attempt can be made. If the code is correct, the Welcome Operator Screen will be displayed and the Operator Settings loaded from the operator profile. The key switch may be moved to the "START" position to start the machine.

Note: For security purposes, in the event an incorrect PIN is entered five times consecutively, the system will lock down for 15 minutes, during which period even a correct PIN will not allow the engine to crank. After the 15 minute lockdown period, entry of a correct PIN will unlock the system as usual.

Note: On machines equipped with the latest Advanced Display software, security may be enabled by the user under the "User Management" sub menu. Security may always be enabled by the Cat dealer regardless of machine configuration.

Backup Camera Mode

NOTICE
Use of backup camera lines do not replace the basic safety precaution and procedures for machine operation in reverse.

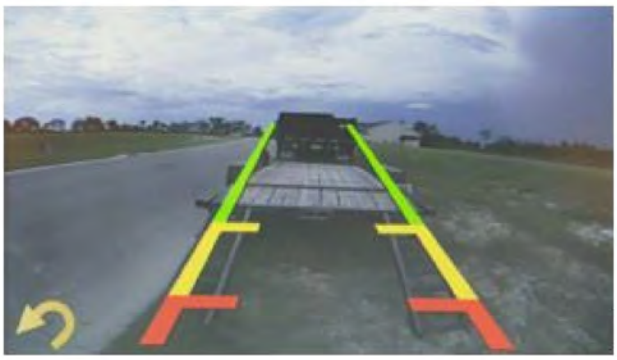

Illustration 235 g06362372

The Camera Screen shows the input from a connected camera if equipped. The display will automatically switch to the Camera Screen anytime the machine is commanded to travel in reverse. Once the reverse travel command is no longer applied, the screen will automatically revert to the prior screen.

The camera display may also be activated from the monitoring screen at any time by pressing the left most soft key which will depict a camera symbol above key while the camera display is not active. Pressing this button again will return the user to the monitoring screen.

Note: The display will momentarily display the camera view each time the parking brake is released.

Note: The backup lines should never replace visually ensuring the area behind the machine is free of objects before traveling in reverse. The backup lines may be adjusted by the operator preferences. See "Display Settings, Adjust Backup Lines".

Forward-Facing Camera Mast Adjustment

If equipped with a forward-facing camera, the camera mast is adjustable between a STOWED and RAISED position.

To access the camera mast safely, refer to Operation and Maintenance Manual, “Camera - Clean".

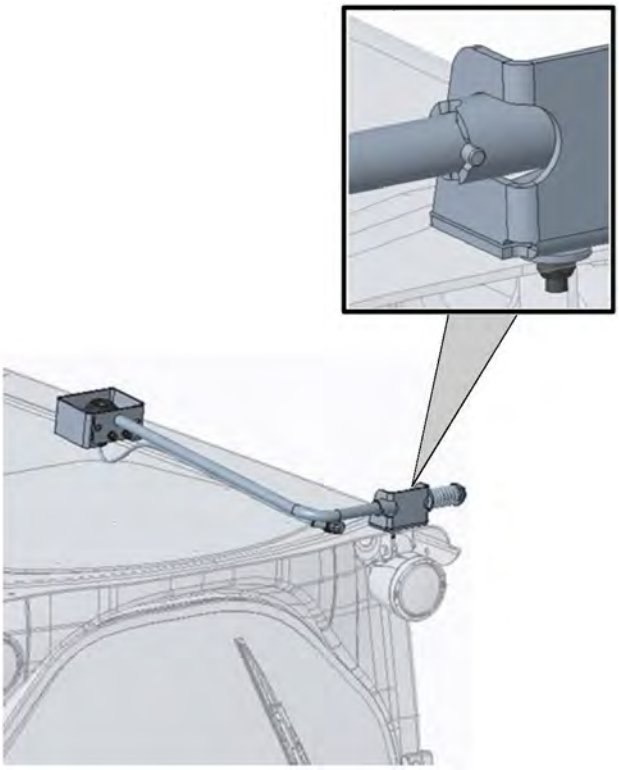

Illustration 236 g06763260

Camera Mast STOWED position

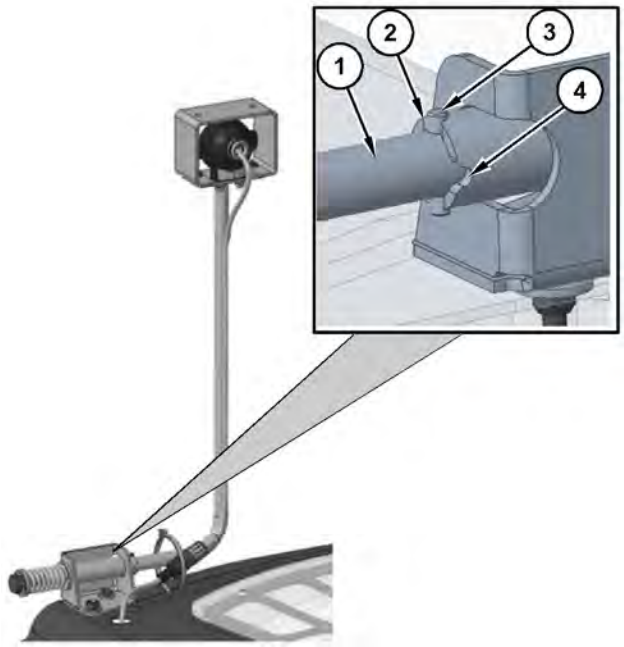

Illustration 237 g06763510

Camera Mast RAISED position

(1) Mast tube assembly
(2) Raised Indent
(3) Mast positioning pin
(4) Stowed Indent

Use the following steps to stow the camera mast:

Note: Operation of the machine with the camera mast in the STOWED position may result in non-conformance to certain visibility requirement regulations. The mast should be placed in the STOWED position for machine shipping purposes only.

1. Pull mast tube assembly (1) away from raised indent (2) to allow mast position pin (3) to move.

2. Fully rotate mast tube assembly (1) downward.

Note: Ensure that mast positioning pin (3) is fully seated in stowed indent (4).

Shipping

The camera mast on top of the cab must be placed in the STOWED position for machine transport. Even in the STOWED position, the machine height is increased from the published values in the machine Operation and Maintenance Manual.

Note: Always measure the overall height of the shipment and confirm the travel route details prior to beginning transport.

Other Features in the Cab

Interlock Control

Illustration 238 g06353312

Armrests

Interlock Control – Move the armrests to the RAISED position to lock out the hydraulic controls.

Note: When the armrests are moved to the RAISED position, the parking brake will engage. Move the armrests to the LOWERED position and push the switch for the parking brake to activate the hydraulic controls.

Note: When you start the engine, the parking brake must be disengaged for the hydraulic controls to be activated. If the armrests are raised and lowered during operation, disengage the parking brake for the hydraulic controls to be activated.

Engine Speed Control

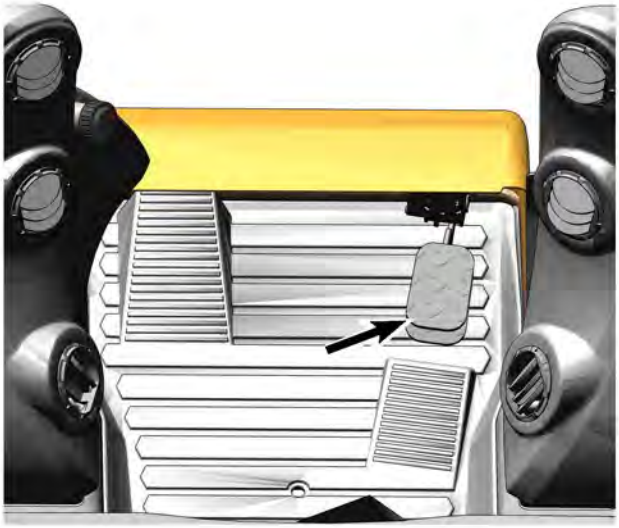

Illustration 239 g06353347

Engine Speed Control – Push down on the Engine Speed Control Pedal to increase engine speed. Release the Engine Speed Control Pedal to decrease engine speed. The Engine Speed Control Pedal will return to the setting of the engine speed control knob.

Note: If the Engine Speed Control Knob is fully clockwise, the Engine Speed Control Pedal will lower engine RPM.

Note: The deceleration function will not lower the RPM to low idle. Do not use this function as a braking function.

Note: There are several features that may impact the low idle of the machine. Refer to Operation and Maintenance Manual, “Engine Starting” for more detailed information.

Suspension Seat

Illustration 240 g06353392

(40) Fore/Aft Adjustment
(41) Adjustment for the suspension

Fore/Aft lever (40) – Move the lever to adjust the seat.

Height (41) – Turn the knob to adjust the suspension of the seat. Turn the knob clockwise for a heavier person. Turn the knob counterclockwise for a lighter person.

Standard Seat

Illustration 241 g06353400

(40) Fore/Aft Adjustment

Illustration 242 g06353409

(40) Fore/Aft Adjustment

Air Suspension Seat

Illustration 243 g06353444

(40) Fore/Aft Adjustment
(41) Adjustment for the suspension
(42) Heat (refer to Seat Heater Controls)
(43) Seat Angle (Incline/Recline)
(44) Lumbar

Seat Adjustment

Push in the knob (41) to increase the stiffness of the suspension. Pull the knob to decrease the stiffness of the suspension. The button (42) on the front will turn on heat. The lever on the left side (43) will Incline and decline the seat. To adjust the lumbar, (44) turn the knob on left rear of seat.

Note: The engine start switch key must be in the ON position to increase the stiffness of the seat.

Seat Heater Controls

Illustration 244 g06353516

WARNING

Heat-induced burns can occur when some people use a seat heater. Do not use the seat heater if you have a reduced ability to sense temperature changes, a reduced ability to feel pain, or have sensitive skin.

The control switch (42) for the seat heater is located near the middle of the seat just below the seat cushion.

Press the top of the switch to turn ON the seat heater. The switch's lamp should illuminate indicating the switch is in the ON position. Press the bottom of the switch to turn OFF the seat heater.

Note: If the switch is in the ON position the seat heater will work even if the switch's lamp does not illuminate. Have a failed lamp replaced as soon as possible.

Armbar and Controls - Adjust

The armbar and joystick assemblies may be adjusted to improve operator comfort.

Cab-Mounted Controls for Mechanical Suspension Seat

Illustration 245 g06353534
Mechanical Suspension Seat

1. Remove the three locknuts and washers (A).
2. Raise the controls bracket up to the alternate mounting slots (B).
3. Adjust for / aft as desired.
4. Reinstall the washers and locknuts (A).
5. Torque to 15 ± 3 N·m (11 ± 2 lb ft).

Seat-Mounted Controls for Air Ride Suspension Seat

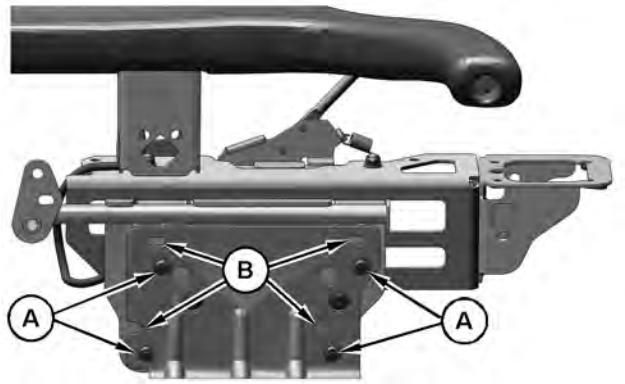

Illustration 246 g06353580
Air Ride Suspension Seat

1. Remove the three locknuts and washers (A).

2. Raise the controls bracket up to the alternate mounting slots (B).

3. Adjust fore/aft as desired.

4. Reinstall the washers and locknuts (A).

Joystick Controls

There are three possible joystick control patterns depending on how the machine is equipped. Each control pattern will affect movement of the work tool and movement of the machine. Each pattern will be discussed in a separate section below.

1. Cat Control Pattern – Default control pattern for machines that are NOT equipped with either the optional Selectable Control Pattern feature or the Dedicated H-Control Pattern feature. Option "1" control pattern for machines that are equipped with the Selectable Control Pattern feature. Refer to Operation and Maintenance Manual, “Operator Controls, Left Side Controls, Selectable Pattern Control Switch”.

2. H-Control Pattern – Default control pattern for machines that are equipped with the optional Dedicated H-Control Pattern feature. Option "2" control pattern for machines that are equipped with the Selectable Control Pattern feature. Refer to Operation and Maintenance Manual, “Operator Controls, Left Side Controls, Selectable Pattern Control Switch”.

3. Hand and Foot Control Pattern – Default control pattern for machines that are equipped with the optional Electrohydraulic (EH) Hand and Foot Controls.

Refer to the section Operation and Maintenance Manual, “Auxiliary Hydraulic Controls” following the three control patterns for instructions about the Auxiliary Hydraulic System.

Note: Your machine may not be equipped with all the controls described in this topic.

Cat Control Pattern: Left-Hand Joystick

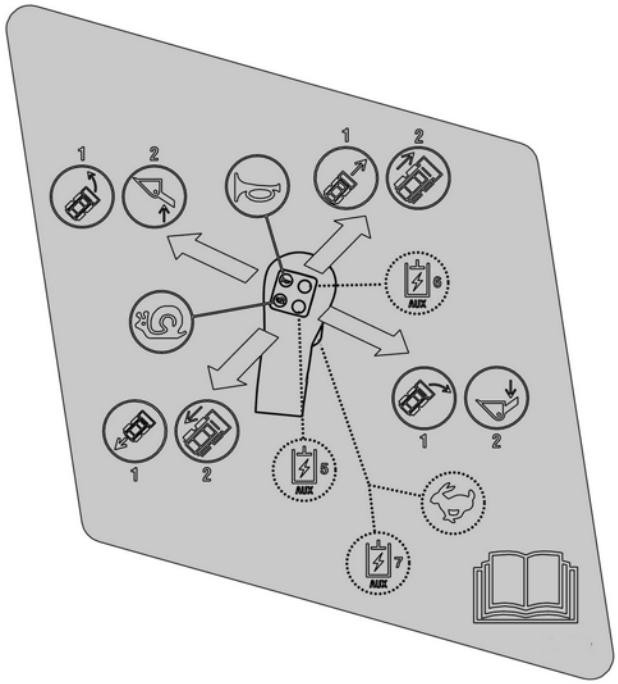

Illustration 247 g06591545

Instruction Film for the Left-Hand Joystick

Forward

Forward Travel – Push the joystick forward to travel forward.

Backward

Backward Travel – Pull back on the joystick to travel in reverse.

Right Turn

Right Turn – Move the joystick to the right to turn the machine to the right.

Left Turn

Left Turn – Move the joystick to the left to turn the machine to the left.

Horn

Horn – Press the switch to sound the horn. Use the horn to alert personnel.

Two Speed Control

Two-Speed – Press the trigger and release the trigger on the front of the left-hand joystick to activate rabbit mode. To activate rabbit mode, the Multifunction Switch must also be in the two-speed position. Refer to “Multifunction Switch for the Left-Hand Trigger (3)” above for instructions about the switch.

Note: Keep the work tool close to the ground when you travel in rabbit mode. This method will maximize the stability of the machine.

Creep Control

The Creep Control allows the operator to select a maximum machine travel speed at full joystick movement. Use creep control for operations that require slow, constant speed independent of engine idle speed.

Creep Control – Press the bottom left-hand joystick to turn on the creep control feature. Creep mode will be engaged the next time the joystick passes through NEUTRAL position. Either during a change of direction or travel initiation from a stopped position. Press the bottom left-hand button on the left-hand joystick to turn off the creep control. Creep mode will be disengaged the next the joystick passes through the NEUTRAL position, either during a change of direction or stopping the machine.

Refer to "Right Side Controls (Alternate), Creep Control" for detailed information about the creep speed control.

Cat Control Pattern: Right-Hand Joystick

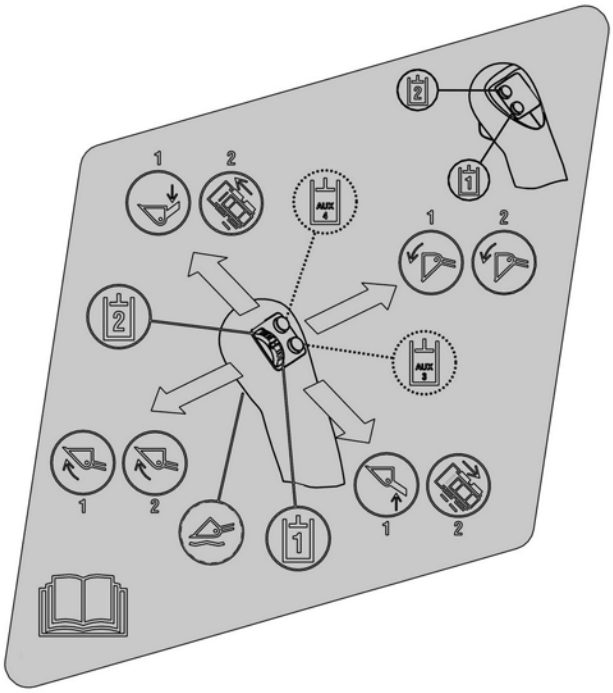

Illustration 248 g06591582

Instruction Film for the Right-Hand Joystick

Lower

Lower – Push the joystick forward to lower the work tool.

Dump

Dump – Move the joystick to the right to tilt the work tool downward.

Raise

Raise – Pull the joystick backward to raise the work tool.

Tilt Back

Tilt Back – Move the joystick to the left to tilt the work tool upward.

Float

Float – Float allows the work tool to follow the contour of the ground.

The following conditions will activate the float function on the machine.

Move the joystick to the LOWER position and press the trigger. Float is activated. You may now release the trigger.

Once the float function is engaged, the joystick can be returned to the neutral position without affecting the float function. Float will remain engaged until the trigger on the right-hand joystick is pressed again. The float function will disengage also when the bucket is raised or when the bucket is lowered by a command greater than approximately 15% of full joystick range.

Auxiliary Shake Out Mode

Auxiliary Shake Out mode is an aggressive movement of the work tool to dislodge wet or sticky material.

Move the right-hand joystick thumb wheel over the NEUTRAL position three times within a 2 second period to activate Auxiliary Shake Out mode. Auxiliary Shake Out mode will remain engaged while the thumb wheel is moved back and forth over the NEUTRAL position. Normal auxiliary control mode will return when the movement of the thumb wheel is discontinued.

Bucket Shake Out Mode

Bucket Shake Out mode is an aggressive movement of the work tool to dislodge wet or sticky material.

Move the Right-Hand Joystick over the NEUTRAL position three times within a 2 second period to activate Bucket Shake Out mode. Bucket Shake Out mode will remain engaged while the Right-Hand Joystick is moved left and right over the NEUTRAL position. Normal bucket control mode will return when the movement of the Right-Hand Joystick is discontinued.

H-Control Pattern: Left-Hand Joystick

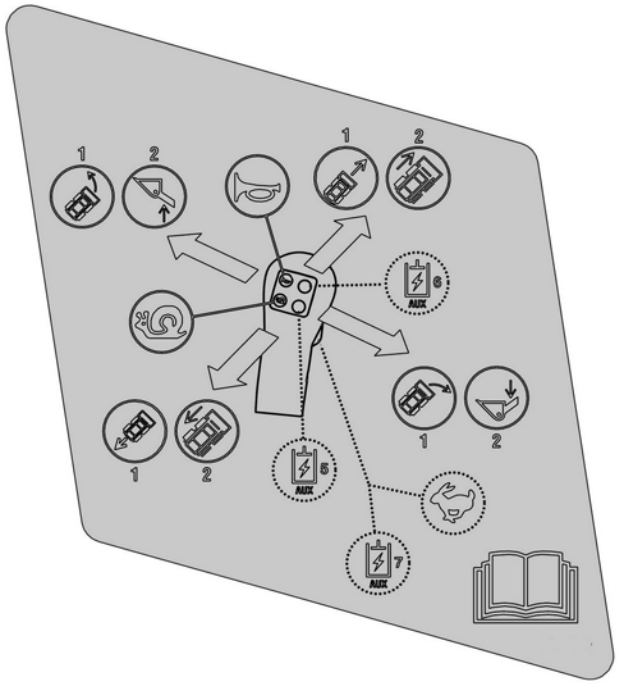

Illustration 249 g06591545

Instruction Film for the Left-Hand Joystick

Forward Drive

Forward – Push the left-hand joystick forward to move the left side of the machine forward.

Push both joysticks forward equally to move the machine in a straight line.

Reverse Drive

Reverse – Pull the left-hand joystick backward to move the left side of the machine backward.

Pull both joysticks backward equally to move the machine backward in a straight line.

Right Turn

Push the left joystick forward to turn the machine to the right.

Push the left joystick forward and pull the right joystick backward to turn the machine rapidly to the right.

Horn

Horn – Press the switch to sound the horn. Use the horn to alert personnel.

Two Speed Control

Two-Speed – Press the trigger and release the trigger on the front of the left-hand joystick to activate rabbit mode. To activate rabbit mode, the Multifunction Switch must also be in the two-speed position. Refer to “Multifunction Switch for the Left-Hand Trigger (3)” above for instructions about the switch.

Note: Keep the work tool close to the ground when you travel in rabbit mode. This method will maximize the stability of the machine.

Lower

Lower – Move the joystick to the right to lower the work tool.

Raise

Raise – Move the joystick to the left to raise the work tool.

Creep Control

The Creep Control allows the operator to select a maximum machine travel speed at full joystick movement. Use creep control for operations that require slow, constant speed independent of engine idle speed.

Creep Control – To activate the creep control, stop the machine and return the joysticks to the NEUTRAL position. Press the bottom left-hand switch on the left-hand joystick to turn on the creep control. To deactivate the creep control, stop the machine and return the joysticks to the NEUTRAL position. Press the bottom left-hand switch on the left-hand joystick to turn off the creep control.

Refer to "Right Side Controls (Alternate), Creep Control" for detailed information about the creep speed control.

H-Control Pattern: Right-Hand Joystick

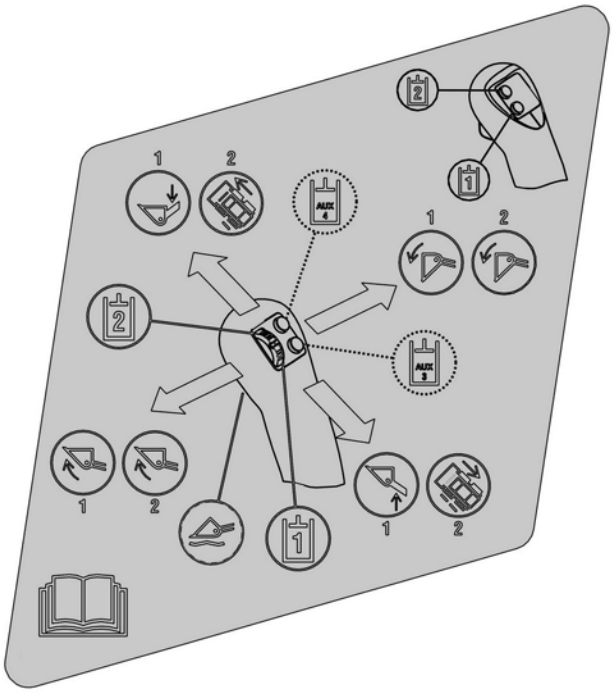

Illustration 250 g06591582

Instruction Film for the Right-Hand Joystick

Forward Drive

Forward – Push the right-hand joystick forward to move the right side of the machine forward.

Push both joysticks forward equally to move the machine forward in a straight line.

Reverse Drive

Reverse – Pull the right-hand joystick backward to move the right side of the machine backward.

Pull both joysticks backward equally to move the machine backward in a straight line.

Left Turn

Push the right joystick forward to turn the machine to the left.

Push the right joystick forward and pull the left joystick backward to turn the machine rapidly to the left.

Dump

Dump – Move the joystick to the right to tilt the work tool downward.

Tilt Back

Tilt Back – Move the joystick to the left to tilt the work tool upward.

Float

Float – Float allows the work tool to follow the contour of the ground.

The following conditions will activate the float function on the machine.

Move the joystick to the LOWER position and press the trigger on the right-hand joystick. Float is activated. You may now release the trigger.

Once the float function is engaged, the joystick can be returned to the neutral position without affecting the float function. Float will remain engaged until the trigger on the right-hand joystick is pressed again. The float function will disengage also when the bucket is raised or when the bucket is lowered by a command greater than approximately 15% of full joystick range.

Auxiliary Shake Out Mode

Auxiliary Shake Out mode is an aggressive movement of the work tool to dislodge wet or sticky material.

Move the right-hand joystick thumb wheel over the NEUTRAL position three times within a 2 second period to activate Auxiliary Shake Out mode. Auxiliary Shake Out mode will remain engaged while the thumb wheel is moved back and forth over the NEUTRAL position. Normal auxiliary control mode will return when the movement of the thumb wheel is discontinued.

Bucket Shake Out Mode

Bucket Shake Out mode is an aggressive movement of the work tool to dislodge wet or sticky material.

Move the Right-Hand Joystick over the NEUTRAL position three times within a 2 second period to activate Bucket Shake Out mode. Bucket Shake Out mode will remain engaged while the Right-Hand Joystick is moved left and right over the NEUTRAL position. Normal bucket control mode will return when the movement of the Right-Hand Joystick is discontinued.

Hand and Foot Control Pattern: Left Side Controls

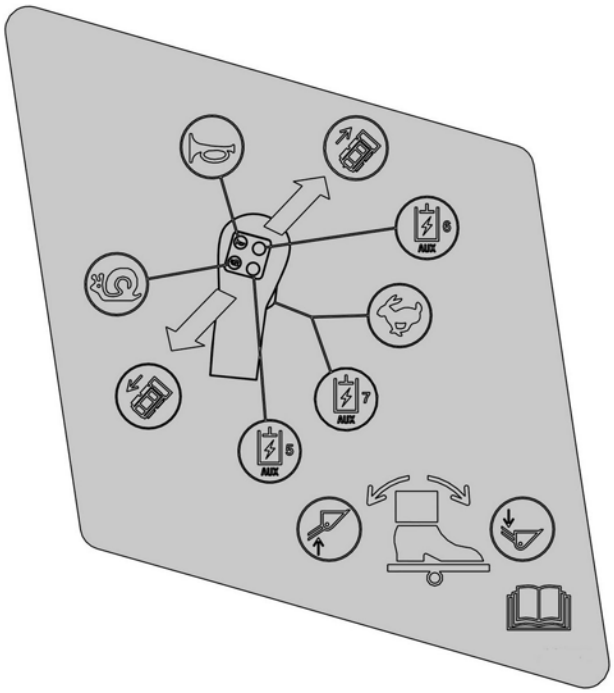

Illustration 251 g06591615

Instruction Film for the Left Side Controls

Note: Film on machine will have black background, white characters, and symbols.

Forward Drive

Forward – Push the left-hand joystick forward to move the left side of the machine forward.

Push both joysticks forward equally to move the machine in a straight line.

Reverse Drive

Reverse – Pull the left-hand joystick backward to move the left side of the machine backwards.

Push both joysticks backwards equally to move the machine backwards in a straight line.

Right Turn

Push the left joystick forward to turn the machine to the right.

Push the left joystick forward and pull the right joystick backward to turn the machine rapidly to the right.

Horn

Horn – Press the switch to sound the horn. Use the horn to alert personnel.

Two Speed Control

Two-Speed – Press the trigger and release the trigger on the front of the left-hand joystick to activate rabbit mode. To activate rabbit mode, the Multifunction Switch must also be in the two-speed position. Refer to “Multifunction Switch for the Left-Hand Trigger (3)” above for instructions about the switch.

Note: Keep the work tool close to the ground when you travel in rabbit mode. This method will maximize the stability of the machine.

Creep Control

The Creep Control allows the operator to select a maximum machine travel speed at full joystick movement. Use creep control for operations that require slow, constant speed independent of engine idle speed.

Creep Control – Press the bottom left-hand joystick to turn on the creep control feature. Creep mode will be engaged the next time the joystick passes through NEUTRAL position. Either during a change of direction or travel initiation from a stopped position. Press the bottom left-hand button on the left-hand joystick to turn off the creep control. Creep mode will be disengaged the next the joystick passes through the NEUTRAL position, either during a change of direction or stopping the machine.

Refer to "Right Side Controls (Alternate), Creep Control" for detailed information about the creep speed control.

Lower

Lower – Press the front portion (Toe) of the foot pedal to lower the work tool.

Raise

Press the rear portion (Heel) of the foot pedal to raise the work tool.

Hand and Foot Control Pattern: Right Side Controls

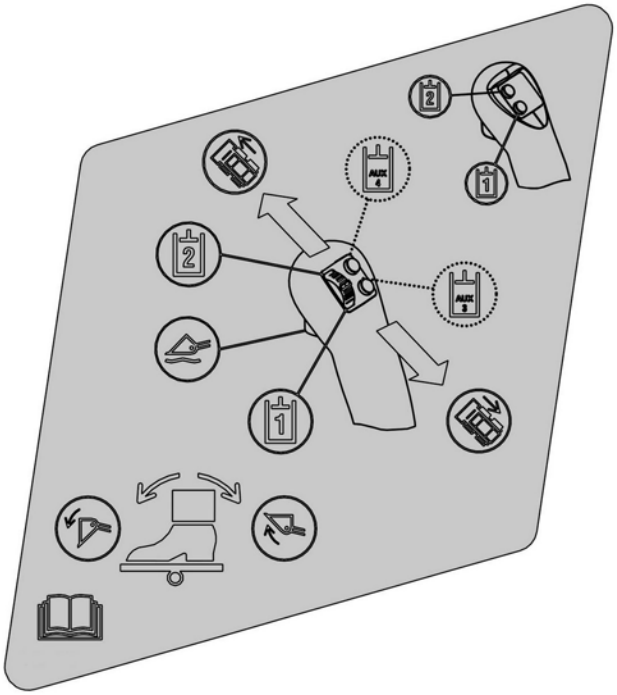

Illustration 252 g06591646
Instruction Film for the Right Side Controls

Note: Film on machine will have black background, white characters, and symbols.

Forward Drive

Forward – Push the right-hand joystick forward to move the right side of the machine forward.

Push both joysticks forward equally to move the machine forward in a straight line.

Reverse Drive

Reverse – Pull the right-hand joystick backward to move the right side of the machine backward.

Pull both joysticks backward equally to move the machine backward in a straight line.

Left Turn

Push the right joystick forward to turn the machine to the left.

Push the right joystick forward and pull the left joystick backward to turn the machine rapidly to the left.

Dump

Dump – Press the front portion (Toe) of the foot pedal to tilt the work tool downward.

Tilt Back

Tilt Back – Press the rear portion (Heel) of the foot pedal to tilt the work tool upward.

Float

Float – Float allows the work tool to follow the contour of the ground.

The following conditions will activate the float function on the machine.

Fully press the front portion (Toe) of the left-hand foot pedal to start the lift arms moving downward and press the right-hand joystick trigger. Float is activated. You may now release the trigger.

Once the float function is engaged, the foot pedal can be returned to the neutral position without affecting the float function. Float will remain engaged until the trigger on the right-hand joystick is pressed again. The float function will disengage also when the bucket is raised or when the bucket is lowered by a command greater than approximately 15% of full foot pedal range.

Auxiliary Shake Out Mode

Auxiliary Shake Out mode is an aggressive movement of the work tool to dislodge wet or sticky material.

Move the right-hand joystick thumb wheel over the NEUTRAL position three times within a 2 second period to activate Auxiliary Shake Out mode. Auxiliary Shake Out mode will remain engaged while the thumb wheel is moved back and forth over the NEUTRAL position. Normal auxiliary control mode will return when the movement of the thumb wheel is discontinued.

Bucket Shake Out Mode

Bucket Shake Out mode is an aggressive movement of the work tool to dislodge wet or sticky material.

Move the right side pedal over the NEUTRAL position three times within a 2 second period to activate Bucket Shake Out mode. Bucket Shake Out mode will remain engaged while the right side pedal is moved forward and backward over the NEUTRAL position. Normal bucket control mode will return when the movement of the right side pedal is discontinued.

Foot Pedal - Adjust

The angle of the foot pedal on machines equipped with Hand and Foot control pattern may be adjusted to improve operator comfort.

Illustration 253 g06353610

Cat Hand and Foot control pattern foot pedal

(45) Foot Control Pedal
(46) Hex nut
(47) Acorn nut

1. Raise the cab.
2. Remove the acorn nuts (47) and Hex nuts (46) from beneath the cab floor.
3. Install up to a maximum of four washers 2mm thick washers.
4. Replace the Hex nuts (46) and torque to 12 ± -3 N·m (9± -2 lb ft).
5. Replace the acorn nuts (3) and torque to 6 ± -1 N·m (4 ± -1 lb ft).

Auxiliary Hydraulic Controls

If the work tool has a wiring harness, connect the work tool harness to the electrical plug on the loader arm. If your High Flow work tool does not have a wiring harness, a Jumper Plug should be installed on the electrical plug for the work tool control. Without this Jumper Plug, the machine will not provide High Flow to the work tool. Refer to your Parts Manual for the current part number for the Jumper Plug.

Note: High flow mode requires an electrical connection that is on the loader arm. Refer to Operation and Maintenance Manual, “Work Tool Coupler Operation” or Operation and Maintenance Manual, “Work Tool Operation” for additional details.

Note: If the high flow work tool does not have a wiring harness, consult the Operation and Maintenance Manual for the work tool for the proper instructions for attaching the work tool.

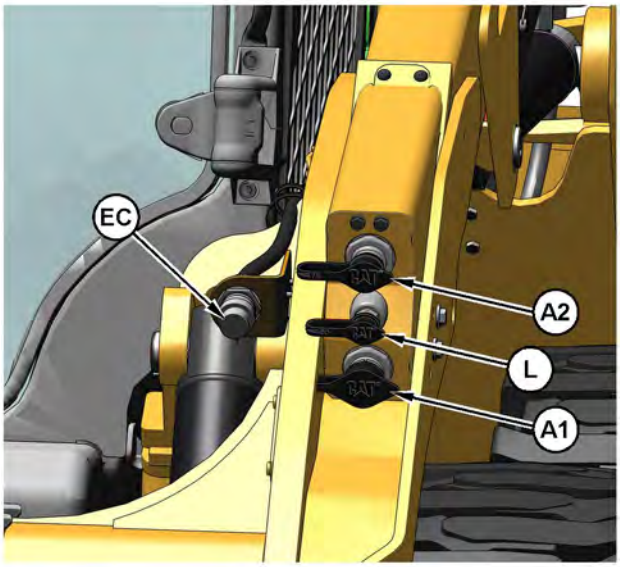

Illustration 254 g06353918

Auxiliary Flow Connections - non-XE Models

(EC) Work Tool Electrical Connector
(A2) 1/2 inch Hydraulic Supply
(A1) 1/2 inch Hydraulic Return
(L) 3/8 inch Case Drain

Note: Your machine may not be equipped with all connections shown.

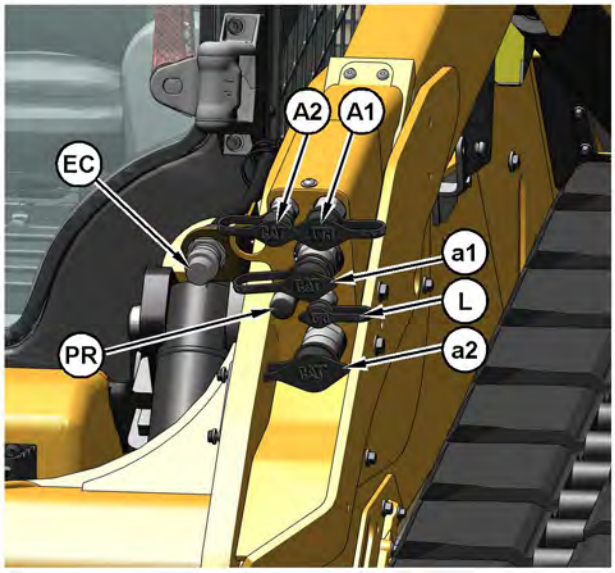

Illustration 255 g06354050

Auxiliary Flow Connections - XE Models

(EC) Work Tool Electrical Connector
(PR) Pressure Relief Knob
(a2) 3/4 inch Hydraulic Return
(A2) 1/2 inch Hydraulic Supply
(a1) 3/4 inch Hydraulic Supply
(A1) 1/2 inch Hydraulic Return
(L) 3/8 inch Case Drain

Note: Your machine may not be equipped with all connections shown.

Note: If Screw-to-Connect style couplings are used, is recommended to swap the position of the male & female couplings to improve hand clearance. Port (a1) will be the female and port (a2) will be the male in this special case. The work tool's connections will need to be swapped as well to ensure high flow in the forward direction with the thumbwheel rotated in the UP or FORWARD direction.

Auxiliary Hydraulic Control (A1) – This control provides hydraulic oil flow to the auxiliary connections on the loader arm. Engage the control to provide hydraulic oil flow to the female connectors (A1) and (a1).

Auxiliary Hydraulic Control (A2) – This control provides hydraulic oil flow to the auxiliary connections on the loader arm. Engage the control to provide hydraulic oil flow to the male connectors (A2) and (a2).

Case drain line (L) – Some hydraulic or hydromechanical work tools will have a Case drain line coming off the work tool motor. A tube routes back to the cooler to the low side return and back to the hydraulic tank.

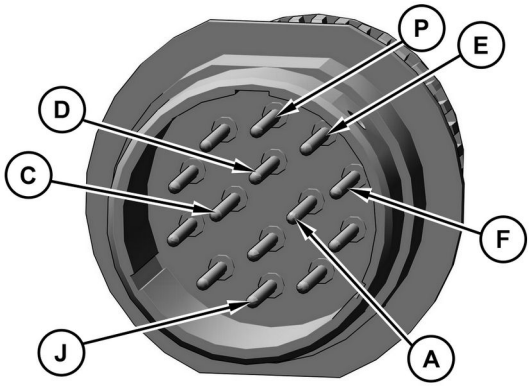

Illustration 256 g06353203

Work Tool Electrical Connection (EC)

(A) Left-Hand Trigger Control “AUX 7”
(C) C- Control "Aux 3"
(D) C+ Control "Aux 4"
(E) C2 Control "Aux 5"
(F) C1 Control "Aux 6"
(J) Auxiliary Electrical Control “AUX 8”
(P) +12V with Key ON

Auxiliary Electrical Control 3 (C−) – This control provides electrical power to activate additional work tool functions using a three-position diverter valve that is on some work tools. Press the switch and hold the switch to send power to the pin (C) this action will activate the required Work Tool function. Release the switch to deactivate the control. If auxiliary hydraulic controls(A1/A2), and continuous flow is inactive, and a work tool featuring auto reverse functionality (such as cold planers) is connected, pressing the switch will send power to pin (C) and provide hydraulic flow to the female connectors (A1) and (a1).

Auxiliary Electrical Control 4 (C+) – This control provides electrical power to activate additional work tool functions using a three-position diverter valve that is on some work tools. Press the switch and hold the switch to send power to the pin (D). This action will activate the required Work Tool function. Release the switch to deactivate the control. If auxiliary hydraulic controls(A1/A2), and continuous flow is inactive and a work tool featuring auto reverse functionality (such as cold planers) is connected, pressing the switch will send power to pin (D) and provide hydraulic flow to the female connectors (A1) and (a1).

Auxiliary Electrical Control 5 (C2) – This control provides electrical power to activate additional work tool functions using a three-position diverter valve that is on some work tools. Press the switch and hold the switch to send power to the pin (E) this will activate the required Work Tool function. Release the switch to deactivate the control.

Auxiliary Electrical Control (C1) – This control provides electrical power to activate additional work tool functions using a three-position diverter valve that is on some work tools. Press the switch and hold the switch to send power to pin (F). This action will activate the required Work Tool function. Release the switch to deactivate the control.

Left-Hand Trigger – Pull the trigger and hold the trigger on the left-hand joystick to provide electrical power to pin (A). Release the trigger to deactivate the control.

Multifunction Switch must be in the Aux 7 position. Refer to "Multifunction Switch for the Left-Hand Trigger (3) " above for instructions about the switch.

Note: These controls are used with the individual Work Tool Operation and Maintenance Manual to understand fully the functions of each control.

Pressure Relief Knob (PR) – See Operation and Maintenance Manual, Work Tool Coupler Operation Hydraulic System Pressure Relief for information.

i08246717

Battery Disconnect Switch

SMCS Code: 1411-B11; 1411

If equipped, the battery disconnect switch is located in the engine compartment near the battery.
Machines that require DEF will include a DEF Purge Indicator Lamp when the battery disconnect switch is installed.

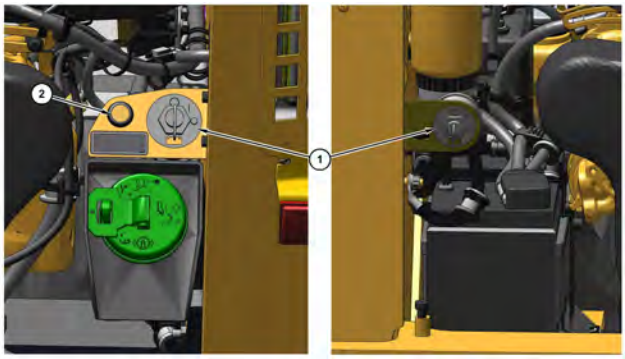

Illustration 257 g06354903

(1) Battery Disconnect Switch
(2) Diesel Exhaust Fluid (DEF) Purge Indicator Lamp

NOTICE

Do not conduct any service procedures on the DEF system until the DEF purge indicator lamp is not illuminated. The indicator lamp may remain illuminated for up to 12 minutes when the key switch is OFF. When the indicator is on, the DEF system is still powered.

ON – To activate the electrical system, insert the disconnect switch key and turn the battery disconnect switch (1) clockwise. The battery disconnect switch must be turned to the ON position before you start the engine.

OFF – To deactivate the electrical system, turn the battery disconnect switch (1) counterclockwise to the OFF position once the DEF Purge Indicator Lamp (2) is off.

The battery disconnect switch and the Key Switch perform different functions. The entire electrical system is disabled when you turn the Battery Disconnect Switch to OFF. The battery remains connected to the electrical system when you turn the Key Switch to OFF.

If equipped, the DEF Purge Indicator Lamp (2) will remain ON after the Key Switch is turned OFF. This procedure is to ensure the DEF injector cool down and DEF system purge processes are complete. Disconnecting the battery while the DEF Purge Indicator Lamp (2) is ON can result in failure of the DEF injector, DEF Pump, or DEF lines.

Illustration 258 g06598111

A warning will be displayed on the Display screen inside the cab at key OFF.

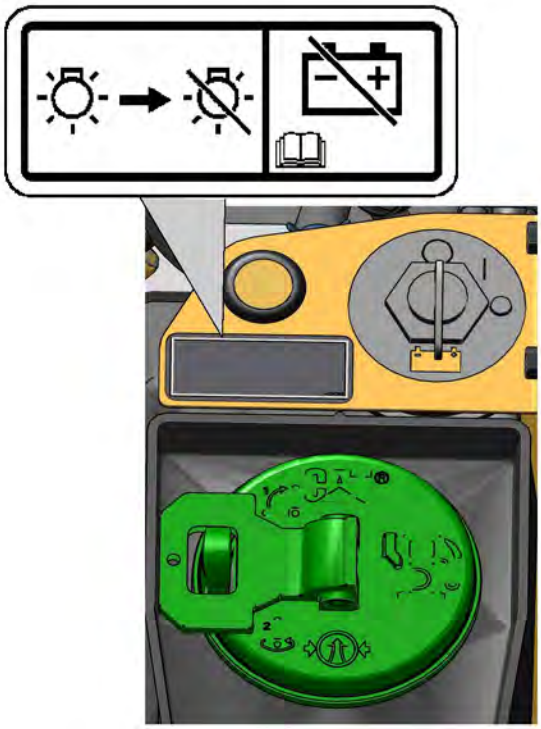

Illustration 259 g06354962

Turn the battery disconnect switch to the OFF position and remove the key when you service the electrical system or any other machine components.

- short circuits
- current draw via some components
- vandalism

NOTICE
Never move the battery disconnect switch to the OFF position while the engine is operating. Serious damage to the electrical system could result.

To ensure that no damage to the engine occurs, verify that the engine is fully operational before cranking the engine. Do not crank an engine that is not fully operational.

Perform the following procedure to check the battery disconnect switch for proper operation:

1. With the battery disconnect switch in the ON position, verify that electrical components in the operator compartment are functioning. Verify that the hour meter is displaying information. Verify that the engine will crank.
2. Turn the battery disconnect switch to the OFF position.
3. Verify that the following items are not functioning: electrical components in the operator compartment, hour meter, and engine cranking. If any of the items continue to function with the battery disconnect switch in the OFF position, consult your Cat dealer.

Note: The Fire Suppression System has an internal battery. In the event of a power loss or if the battery disconnect switch is in OFF position, the fire suppression system is equipped with an Internal Reserve power source that may last up to 72 hours.

i08709698

Diesel Particulate Filter Regeneration

SMCS Code: 108F

S/N: B621–Up

S/N: GJ21–Up

S/N: HX21–Up

S/N: L321–Up

S/N: ZB21–Up

S/N: JX31–Up

S/N: LB31–Up

S/N: R231–Up

S/N: TP31–Up

S/N: TY31–Up

S/N: TP41–Up

S/N: TY41–Up

S/N: EK51–Up

S/N: GJ51–Up

S/N: WS51–Up

S/N: GK61–Up

S/N: KC61–Up

S/N: ME61–Up

S/N: PF61–Up

S/N: TY61–Up

S/N: S381–Up

S/N: AN91–Up

S/N: BT91–Up

S/N: BX91–Up

S/N: CW91–Up

S/N: CY91–Up

S/N: DY91–Up

S/N: GX91–Up

S/N: JX91–Up

S/N: RB91–Up

S/N: TE91–Up

S/N: TP91–Up

S/N: T8A1–Up

S/N: WKD1–Up

S/N: S7E1–Up

S/N: W6E1–Up

S/N: Z9E1–Up

S/N: RWK1–Up

S/N: KXL1–Up

S/N: S1L1–Up

S/N: P3R1–Up

S/N: K5S1–Up

S/N: XES1–Up

S/N: HSX1–Up

S/N: T9X1–Up

S/N: KEZ1–Up

S/N: T7Z1–Up

S/N: T9Z1–Up

General Information

Regeneration is the removal of soot from the Diesel Particulate Filter (DPF). Active and passive regeneration is used to regenerate the DPF. The DPF traps both soot and ash. The soot is removed during regeneration. The ash is removed through a cleaning process. Refer to the Operation and Maintenance Manual, “Diesel Particulate Filter - Clean/Replace” for more information on the service of the DPF.

Modes of Regeneration

Passive – Passive Regeneration occurs when the exhaust temperature is high enough for regeneration to occur. Passive regeneration may occur unnoticed by the operator. No operator action is required. Operating the machine above mid throttle and under load allows for passive regeneration during normal operation. Low idle and low load applications will have lower exhaust temperatures, where passive regeneration is not possible.

Active – Active regeneration is a late injection of fuel into the combustion chamber, which sufficiently raises the exhaust temperature for active regeneration. The engine ECM uses multiple inputs from the engine to determine when active regeneration is needed. All applications, even high load, will require active regenerations. However, active regeneration will not occur as frequently as low idle and low load applications.

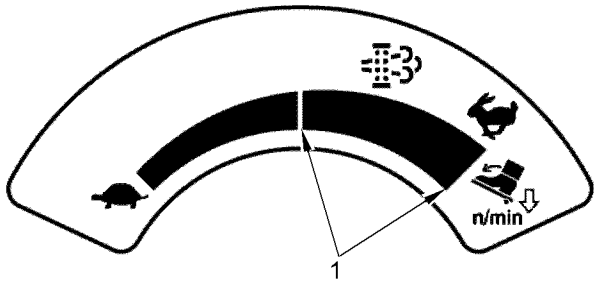

Illustration 260 g03395636

(1) Active regeneration threshold

Note: The green area is the active regeneration threshold.

There will be a slight change in the exhaust noise during active regeneration. Active regenerations may require the engine rpm to be above the active regeneration threshold. The active regeneration may take up to 30 minutes to complete.

When active regeneration is required with the parking brake and hydraulic lockout engaged, automatic adjustments of the engine speed by the ECM may occur to keep the engine RPM above the active regeneration threshold.

When active regeneration is required and the machine is being operated below the active regeneration threshold, the DPF alert indicator may illuminate. The operator can increase the rpm above the active regeneration threshold with the Engine Speed Control Knob. Active regeneration will occur and the DPF light will turn off.

If increasing the RPM is not acceptable, alternatively the operator can allow a parked regeneration. For a parked regeneration to occur. The engine must be at low idle, the parking brake engaged, and the hydraulic lockout engaged. If those conditions are met for approximately 2 minutes, the ECM will slowly increase the engine rpm and active regeneration will begin. After completing the active regeneration, the engine speed will slowly decrease down to low idle.

The following chart describes the alert indicators and what actions, if any, the operator needs to perform to allow active regeneration.

Warning Symbols

1 - DPF

2 - Alert

3- Cab Alarm

Engine Emission Alert

Table 27

Warning [1]	Machine Action	Operator Action
None	If the parking brake and hydraulic lockout are engaged, the ECM may increase the engine speed	No action required.
1- Solid Amber	If the parking brake is not engaged and the engine speed is below the green shaded area on the Engine Speed Control Knob, the DPF light will turn on.	Increase the engine rpm to the green shaded area on the Engine Speed Control Knob, and the DPF light will turn off. or Bring the machine to a stop. Engage the parking brake and hydraulic lockout. Set the engine speed to low idle. The ECM will automatically increase the engine rpm to the regeneration threshold. The regeneration may take up to 30 minutes.
1 - Solid Amber 2 - Solid Amber	The engine will derate until active regeneration is completed	Bring the machine to a stop. Engage the parking brake and hydraulic lockout. Set the engine speed to low idle The ECM will automatically increase the engine rpm to the regeneration threshold. The regeneration may take up to 30 minutes.
1 - Solid Amber 2 - Flashing Amber 3 - Beeping	Engine will remain derated.	Regeneration can only be done through Cat Electronic Technician (ET), by an authorized Cat dealer. Consult your local Cat dealer. If the engine is run through these warning indicators, the DPF will require servicing and may require replacement. Engine damage can occur. Shut down the machine safely and contact your local Cat dealer.

[1] For Models equipped with either C3.3B or C3.8 Engine Only

Table 28

Warning [1]	Machine Action	Operator Action
None	If the parking brake and hydraulic lockout are engaged, the ECM may increase the engine speed	No action required.
1- Solid Amber	If the parking brake is not engaged and the engine speed is below the green shaded area on the Engine Speed Control Knob, the DPF light will turn on.	Increase the engine rpm to the green shaded area on the Engine Speed Control Knob, and the DPF light will turn off. or Bring the machine to a stop. Engage the parking brake and hydraulic lockout. Set the engine speed to low idle. The ECM will automatically increase the engine rpm to the regeneration threshold. The regeneration may take up to 30 minutes.
1 - Flashing Amber 2 - Solid Amber	If equipped, the Advanced Display will display a pop-up warning once the DPF light has been on for 1 hour.	
1 - Flashing Amber 2 - Flashing Amber	The engine will derate until active regeneration is completed	Bring the machine to a stop. Engage the parking brake and hydraulic lockout. Set the engine speed to low idle The ECM will automatically increase the engine rpm to the regeneration threshold. The regeneration may take up to 30 minutes.
1 - Flashing Amber 2 - Flashing Amber 3 - Beeping	Engine will remain derated.	Regeneration can only be done through Cat Electronic Technician (ET), by an authorized Cat dealer. Consult your local Cat dealer. If the engine is run through these warning indicators, the DPF will require servicing and may require replacement. Engine damage can occur. Shut down the machine safely and contact your local Cat dealer.

[1] For Models equipped with a C2.2 Engine Only

Note: If the machine is equipped with the Advanced Display, additional diagnostic information will be displayed in the monitor.

Carbon Dioxide (CO_2) Emissions Statement

Emissions regulations require that the value of the CO_2 emissions be reported to the end user. These CO_2 values are measured per the EU type approval process. These values are recorded in EU type approval certificates. CO2 measurement results from testing over a fixed test cycle, under laboratory conditions, with a parent engine representative of the engine family. This value shall not imply or express any guarantee of the performance of a particular engine.

Table 29

Serial Number Prefixes	Engine	CO_2 Emission Level
226D3 (EK5), 232D3 (GJ5), 239D3 (K5S & RWK), 249D3 (WS5 & WKD)	C2.2	799 g/kWh

(continued)

(Table 29, contd)

236D3 (GK6), 242D3 (ME6, T7Z), 257D3 (S7E), 259D3 (TE9)	C3.3B	807 g/kWh
246D3 (PF6, T9X), 262D3 (W6E, TP3), 279D3 (Z9E), 289D3 (BT9)	C3.3B	807 g/kWh
272D3 (L32, TY3), 272D3 XE (S1L, TY6), 299D3 (P3R, JX3), 299D3 XE (B62, GX9, R23, S38)	C3.8	758 g/kWh

EU Stage V Emissions Control System (European Union)

Operation & Maintenance of the Stage V Emissions Control System

The engine, including the emissions control system, shall be operated, used, and maintained in accordance with the instructions provided to the end users to maintain the emissions performance of the engine within the requirements applicable to the engine category.

No deliberate tampering with or misuse of the engine emissions control system should take place. In particular regarding deactivating or not maintaining an exhaust gas recirculation (EGR) or a reagent dosing system if equipped.

It is essential to take prompt action to rectify any incorrect operation, use, or maintenance of the emissions control system in accordance with the rectification measures indicated by the unique warning diagnostic codes outlined below.

Failure Warnings and Operator Inducement Strategy

The EU Stage V Emissions Control system detects failures of the system by PM control diagnosis (PCD) and NOx control diagnosis (NCD). The system logs warning codes in the engine electronic control module (ECM) and signals the operator of system failure detection via a combination of visual and audible warnings in the machine operator station. Ignoring the operator warning signals will lead to the activation of the operator inducement system, which may result in an effective disablement of the machine.

Table 30

EU Stage V Emissions Control System Failure Warnings for C3.3B & C3.8 Engines						
Emission Failure Cause	**Control Diagnostics System**	**Warning Code (SPN-FMI)**	**Event Level**	**Visual Warnings via Display**	**Audible Warning via Cab Alarm**	**Inducement Response**
Removal of the DPF system	PCD (Particulate Matter)	3936-7	3	DPF Alert Indicator (1) Driver Alert Indicator (1) Diagnostic Pop-Up	Yes	None
Loss of function of the DPF system		3936-2	2		No	
Failure of the PCD system		3251-3	2		No	
Removal of the EGR system	NCD (NOx Emission)	523578-2	2		No	2 Stage Engine Derate
Removal of the MAF sensor		132-4	3		Yes	

(1) Refer to Operation and Maintenance Manual, Alert Indicators for additional information.

Table 31

EU Stage V Emissions Control System Failure Warnings for C2.2 Engines						
Emission Failure Cause	**Control Diagnostic System**	**Warning Code (SPN-FMI)**	**Event Level**	**Visual Warnings via Display**	**Audible Warning via Cab Alarm**	**Inducement Response**

(continued)

(Table 31, contd)

Loss of Function of the DPF	PCD (Particulate Matter)	5246-16	2	Driver Alert Indicator (flashing) & Diagnostic Pop Up (when equipped with Advanced Display)	None	Yes
		5246-0	3		Yes	Yes
3251-1		3	Yes		No	
Removal of DPF	3251-18	2	None		No	
Loss of Function of the EGR System	NCD (NOx Emission)	27-3	2		None	yes
		27-4	2	None	yes	

Alert Indicators

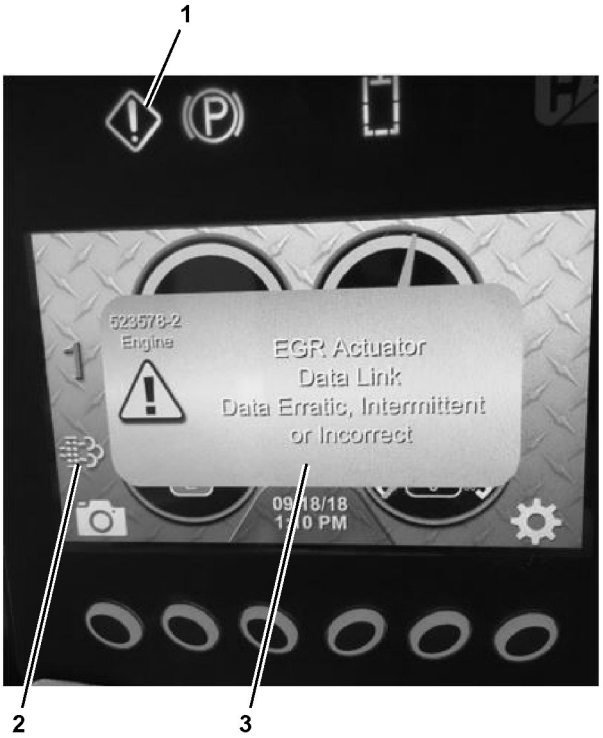

Illustration 261 g06362469

Alert Indicators & Pop-Up Warnings Identification

(1) Driver Alert Indicator
(2) DPF Alert Indicator
(3) Diagnostic Pop-Up

Inducement Levels

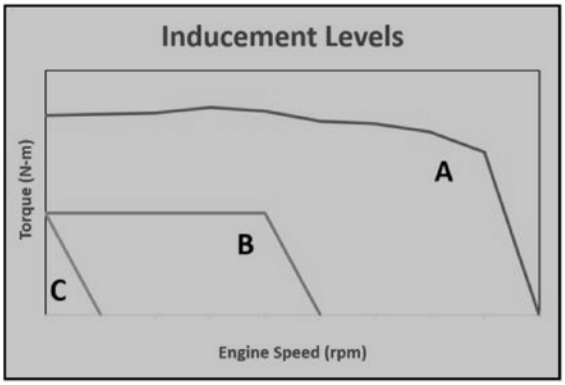

Illustration 262 g06362472

EU Stage V Emissions Control System Inducement Levels

A – No Fault Code, Normal Operation Range

B – Stage 1 Inducement:

- Response: Engine De-rated to within 50% Max Torque, 60% Rated Speed
- Occurrence: After 3 hours 15 minutes of active fault

C – Stage 2 Inducement:

- Response: Engine delivers nearly No Net Torque, Engine Speed near Low Idle
- Occurrence: After 4 hours of active fault

DPF Service Operator Notification (C3.3B & C3.8 Engines Only)

The Diesel Particulate Filter (DPF) traps particulate matter in the form of both soot and ash. Soot is burned off periodically during the regeneration process, but ash will continue to accumulate slowly over time. Eventually, the DPF will become fully loaded with ash and will need to be serviced (cleaned or replaced) by an authorized Cat dealer.

The EU Stage V emissions control system estimates the DPF's ash loading to provide maximum DPF life. When the ash load reaches an estimated 100%, the machine control system will generate an active event code and display a message to the operator. At this point it is recommended that the DPF be serviced. The message can be dismissed from the display and will reappear every 8 hours or each key cycle. After 50 hours without a service tool reset, the active event code will escalate and display a similar message every 15 minutes or each key cycle. If the message is continually ignored, the high ash content within the DPF will cause a high frequency of DPF regeneration triggering a diagnostic that is accompanied with an engine derate.

Illustration 263 g06362442

Typical Pop-Up Message of the DPF Service Notification

DPF Service Operator Notification (C2.2 Engines Only)

The Diesel Particulate Filter (DPF) traps particulate matter in the form of both soot and ash. Soot is burned off periodically during the regeneration process, but ash will continue to accumulate very slowly over time. The DPF is considered "fit for life" on these models and should never require servicing during the useful life of the machine. If you suspect a problem with the DPF however, stop the machine safely and contact your local Cat dealer.

Engine Manufacturer Contact Information (C3.3B & C3.8 Engines Only)

Kubota Europe SAS
19-25, Rue Jules Vercruysse, Z.I. BP88
95101 Argenteuil Cedex
France

Kubota Europe S.A.S. Italy Branch
Via Grandi, 29
20068 Peschiera Borrome (MI)
Italy

Kubota (Deutschland) GmbH
Senefelder Str. 3-5
63110 Rodgau / Nieder-Roden
Germany

Engine Manufacturer Contact Information (C2.2 Engines Only)

Manufacturer:

Caterpillar Inc.
100 N.E. Adams Street
Peoria, Illinois 61629
USA

Entity authorized by the manufacturer at the territory of Eurasian Economic Union:

Caterpillar Eurasia LLC
75, Sadovnicheskaya Emb.
Moscow 115035
Russia

i06135026

Selective Catalytic Reduction Warning System

SMCS Code: 1091-WXX; 7400

S/N: B621–Up

S/N: GJ21–Up

S/N: HX21–Up

S/N: L321–Up

S/N: JX31–Up

S/N: LB31–Up

S/N: R231–Up

S/N: TY31–Up

S/N: TY61–Up

S/N: S381–Up

S/N: AN91–Up

S/N: BX91–Up

S/N: CY91–Up

S/N: DY91–Up

S/N: GX91–Up

S/N: WKD1–Up

S/N: RWK1–Up

S/N: S1L1–Up

S/N: P3R1–Up

S/N: XES1–Up

The selective catalytic reduction (SCR) system is a system used to reduce NOx emissions from the engine. Diesel exhaust fluid (DEF) is pumped from the DEF tank and is sprayed into the exhaust stream. The DEF reacts with the SCR catalyst to reduce NOx and leaves a nitrogen and water vapor.

NOTICE
Allow the engine to perform a DEF purge of the DEF system before you turn the battery disconnect switch to OFF. Disconnecting the battery power too soon may prevent proper cool down of DEF injector and purging of the DEF system after the engine is shut down. Refer to Operation and Maintenance Manual, “Battery Disconnect Switch” for more information.

Illustration 264 g03821224

The DEF level gauge icon is designated the "SCR Warning" alert indicator. Refer to "Right Side Controls (Alternate), Monitoring Screen, Fuel & Diesel Exhaust Fluid (DEF) Level Gauge " for location.

Illustration 265 g03821224

- At Level 1 the SCR Warning alert indicator will change from white to solid RED.

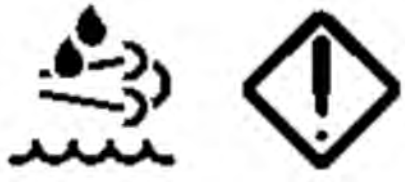

Illustration 266 g03821235

- At Level 2 the SCR Warning alert indicator will flash RED, a pop-up warning will appear in the display with the diagnostic code description, and the Driver alert indicator will flash AMBER. Maximum engine speed is reduced to 60% of rated speed and maximum torque is reduced by 50%.

Illustration 267 g03821243

- At Level 3 the SCR Warning alert indicator will flash RED, a pop-up warning will appear in the display with the diagnostic code description. The Driver alert indicator will flash AMBER, and the audible alarm will occur. Engine speed is limited too nearly low idle and no engine torque is available.

The SCR Warning alert indicator will turn ON when the DEF tank level is low, a quality issue with the DEF is detected, or there is a fault in the SCR system. The following are the parameters for each warning type.

Diesel Exhaust Fluid Level – When the DEF gauge is near the red range, the indicator will go to a Warning Level 1. After 45 minutes of operation, the warning will increase to Level 2. When the DEF tank level is empty, the warning will increase to a Level 3.

Diesel Exhaust Fluid Quality – The sensor in the DEF tank measures the quality of the DEF. If non-standard DEF is supplied or is diluted, the lamp will go to Warning Level 1. After operating for 3 hours and 15 minutes, the warning will increase to Level 2. After operating for another 45 minutes, the warning will increase to a Level 3.

SCR System Fault – If any of the SCR system sensors are disconnected or any fault codes occur in the SCR system, the indicator will go to a Warning Level 1. After 3 hours and 15 minutes, the warning will go to a Level 2. After operating for another 45 minutes, the warning will increase to a Level 3.

i08224154

Alert Indicators

SMCS Code: 7450; 7451

The alert indicators are on the right-hand display.

Note: Your machine may not be equipped with all the indicators that are discussed in this topic.

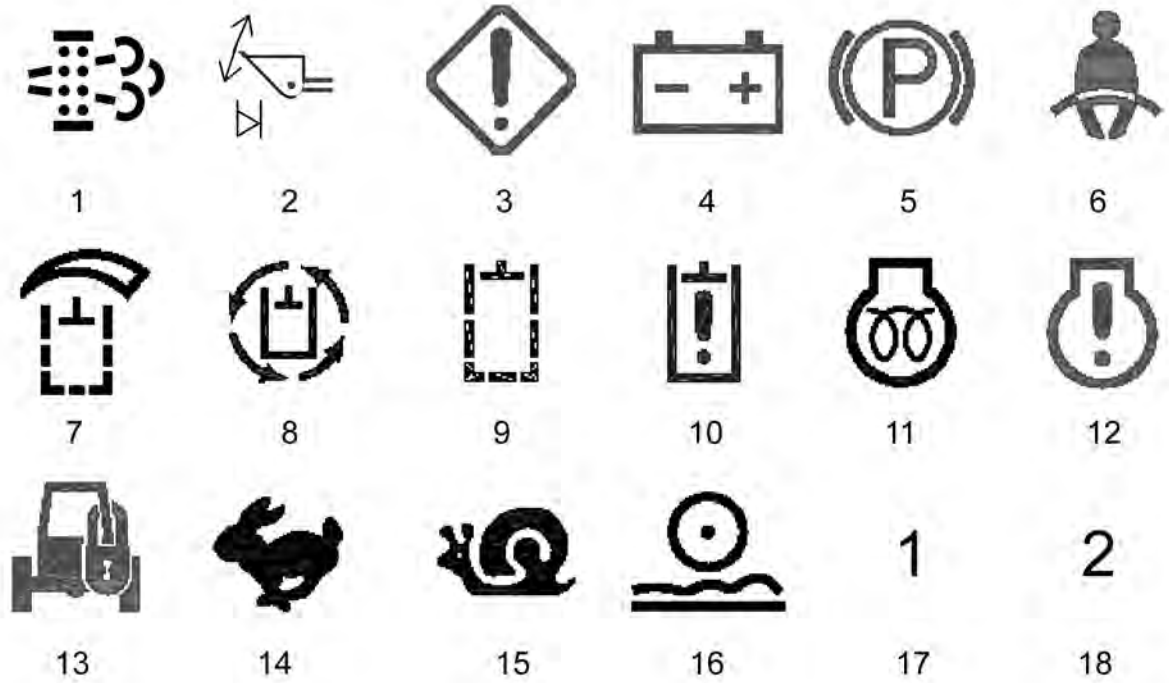

Illustration 268 g02817376

Left Side

1 – Diesel Particulate Filter

2 – Self-Level System

3 – Driver Alert

4 – System Voltage

5 – Parking Brake

6 – Operator Presence

7 – Auxiliary Hydraulic High Flow

8 – Continuous Flow

9 – Work Tool System

- RED Work Tool Lockout
- AMBER Interlock Override

10 – Hydraulics

- RED Hydraulic Temperature
- AMBER Hydraulic Filter Bypass

11 – Cold Starting Aid

12 – Engine Condition Indicator

- RED Coolant Temperature
- RED Oil Pressure
- AMBER Air Cleaner Indicator

13 – Anti-Theft Security System

14 – Two-Speed Indicator

15 – Creep Control Mode Indicator

16 – Ride Control

17 – Cat Control Pattern

18 – H-Control Pattern

1 - Diesel Particulate Filter This alert will activate when the diesel particulate filter needs regeneration. Refer to this Operation and Maintenance Manual, “Diesel Particulate Filter Regeneration” for details.

Note: Machines equipped with EU Stage V Emission Controls will also use this alert indicator to signal system failure. Refer to this Operation and Maintenance Manual, “Diesel Particulate Filter Regeneration”, "EU Stage V Emissions Control System" for applicable models and details.

2 - Self-Level System This alert indicator will light when the Self-Level System in ON. This alert indicator will blink twice when the user-selected work tool target angle is established. Refer to Operation and Maintenance Manual, Operator Controls Left-Side Controls, Self-Level System Switch.

3 - Driver Alert This alert indicator will activate when there is a problem which requires operator attention.

Note: Machines equipped with EU Stage V Emission Controls will also use this alert indicator to signal system failure. Refer to this Operation and Maintenance Manual, “Diesel Particulate Filter Regeneration”, "EU Stage V Emissions Control System" for applicable models and details.

Note: Other alert indicators that light or the gauges may help investigate the cause of any problems.

There are three levels of severity for the indicator:

Level 1 – If the alert indicator is on continuously, stop the machine at the earliest convenience. Check the following before consulting your Cat dealer.

- Ensure that the machine has been adequately warmed up. Refer to Engine Starting for an explanation of the engine and ambient conditions that may trigger this.
- If the Engine Condition alert indicator is AMBER, water may be present in the fuel. Drain the water from the fuel/water separator. For more information refer to “Operation Maintenance Manual” Fuel System Primary Filter (Water Separator) - Drain.
- If the Engine Condition alert indicator is AMBER, the engine air filter may be restricted. For more information refer to “Operation Maintenance Manual” Engine Air Filter Primary Element - Clean/Replace.
- If the Hydraulics alert indicator is AMBER, the filter is bypassing. Check that the hydraulic oil filter is not plugged. For more information refer to “Operation Maintenance Manual” Hydraulic System Oil Filter - Replace. See also Oil Filter - Inspect.
- Check for proper battery voltage and ensure that the alternator and wiring are good.

Level 2 – If the alert indicator is flashing and there is no audible alarm, severe component damage could occur. Stop the machine at the earliest convenience and check the following before consulting your Cat dealer.

- If the Engine Condition alert indicator is RED and the maximum engine speed is reduced, water may be present in the fuel. Drain the water from the fuel/water separator. For more information refer to “Operation Maintenance Manual” Fuel System Primary Filter (Water Separator) – Drain
- If the Engine Condition alert indicator is RED and the maximum engine speed is reduced, the engine air filter may be restricted. For more information refer to “Operation Maintenance Manual” Engine Air Filter Primary Element - Clean/Replace.
- Check for proper battery voltage and ensure that the alternator and wiring are good.
- If the machine is equipped with a Diesel Particulate Filter, move the machine to a safe location and set the parking brake. If the engine RPM begins to rise shortly, allow the machine to complete a regeneration cycle. For more information refer to “Operation Maintenance Manual” Diesel Particulate Filter Regeneration.
- If the SCR Warning alert indicator is flashing RED, check the Diesel Exhaust Fluid Level. See Diesel Exhaust Fluid - Fill. Refer to Selective Catalytic Reduction Warning System for an explanation of the various SCR warning levels.
- A sensor on the machine may be faulted or has come unplugged. For tracked machines, check that the wiring to the drive motor speed sensor wiring is not damaged. Consult your Cat dealer for advanced troubleshooting support.

Level 3 – If the alert indicator is flashing and there is an audible alarm, injury to the operator or severe component damage could occur. Stop the machine immediately and check the following before consulting your Cat dealer:

- Check the engine oil. See Operation Maintenance manual, Engine Oil level - Check . If the Engine Condition alert indicator is RED, the engine oil filter may be plugged. See Engine Oil and Filter - Change. See also Oil Filter - Inspect.
- If the Engine Condition alert indicator is RED, the engine coolant temperature may be high. Clean the engine radiator, reduce the engine load, and allow the engine to cool. For more information refer to Operation Maintenance Manual, Radiator Core - Clean.
- If the Hydraulics alert indicator is RED, the hydraulic oil temperature is high. Check the hydraulic oil level. Refer to Operation Maintenance Manual, Hydraulic System Oil Level - Check. Clean the hydraulic oil cooler, reduce the hydraulic load, and allow the system to cool. See Radiator Core - Clean.
- If the SCR Warning alert indicator is flashing RED, check the Diesel Exhaust Fluid Level. See Diesel Exhaust Fluid - Fill. Refer to Selective Catalytic Reduction Warning System for an explanation of the various SCR warning levels.
- A sensor on the machine may be faulted or has come unplugged. For tracked machines, check that the wiring to the drive motor speed sensors is not damaged. Consult your Cat dealer for advanced troubleshooting support.

4 - System Voltage This alert indicator will light if there is a malfunction in the electrical system. If this alert indicator comes on, the system voltage is too high for normal machine operation or too low for normal machine operation.

If electrical loads are high and the engine speed is near low idle, increase the engine speed to high idle to get more output from the alternator. If the alert indicator for the electrical system turns off within 1 minute, the electrical system is probably operating in a normal manner. However, the electrical system may be overloaded during periods of low engine speeds.

Increase the engine idle speed with the governor lever to compensate for a higher electrical load on the system.

If this procedure does not cause the alert indicator to turn off, move to a convenient location. Investigate the cause (loose alternator belt, broken alternator belt, or faulty batteries).

5 - Parking Brake This alert indicator will light when the parking brake is engaged. The alert indicator should come on during start-up. The alert indicator should go out when the parking brake is disengaged.

6 - Operator Presence This alert indicator will light when the armrests are in the RAISED position. The alert indicator will light when the operator gets out of the operator seat. The alert indicator should go out when the operator is in the operator seat and the armrests are in the LOWERED position.

7 - Auxiliary Hydraulic High Flow This alert indicator will light when the high flow hydraulic system is activated.

8 - Continuous Flow This alert indicator will flash when the machine is in "Continuous Flow Ready" mode. This alert indicator will light when continuous flow is activated.

9 - Work Tool System

- This alert indicator will light red when the work tool lockout control is activated.
- This alert indicator will light amber when the interlock override is activated.

10 - Hydraulics

- This alert indicator will light red and an audible alert will sound when the temperature of the hydraulic oil is too high. If this indicator comes on, stop the machine immediately. Stop the engine and investigate the problem.
- This indicator will light amber when the hydraulic oil filter is not functioning properly. Stop the machine and replace the oil filter. The indicator will stay on until the hydraulic oil has warmed up. Do not operate the machine until the light turns off.

11 - Cold Starting Aid With the engine start switch in the ON position, this alert indicator will light when the aid is activated. Refer to Operation and Maintenance Manual, “Engine Starting” for more information about the heater.

12 - Engine Condition Indicator This alert will activate when there is a problem which requires operator attention.

Note: Other alert indicators that light or the gauges may help investigate the cause of any problems.

Note: This alert indicator is only on machines equipped with the Basic Display. The Advanced Display communicates relevant engine diagnostic information with descriptive pop-up screens.

There are three levels of severity for this indicator:

- Level 1: If the alert indicator is on continuously, stop the machine at the earliest convenience. This alert is for the air cleaner indicator. Stop the machine and service the air cleaner.

- Level 2: If the alert indicator is flashing and there is no audible alarm, severe component damage could occur. Change your operation or perform the indicated maintenance.
- Level 3: If the alert indicator is flashing and there is an audible alarm, injury to the operator or severe component damage could occur. Stop the machine immediately and stop the engine.

13 - Anti-Theft Security System This alert indicator will light when the Anti-Theft Security System is activated. Refer to Operation and Maintenance Manual, “Anti-Theft Security System” for more details about the security system.

14 - Two-Speed Indicator This alert indicator will light when two-speed travel mode is engaged.

15 - Creep Control Mode Indicator This alert indicator will light when Creep Control mode is engaged.

16 - Ride Control This alert indicator will light when the Ride Control switch is “ON” and the necessary ground speed is reached for Ride Control activation.

17 - Cat Control Pattern If your machine is equipped with the optional Selectable Control Pattern Switch, this alert indicator will flash until a control pattern is selected via the switch. This alert indicator will light when the Cat Control Pattern is activated.

Note: Refer to Operation and Maintenance Manual, “Operator Controls - Joystick Controls” for information about the joystick control patterns.

18 - H-Control Pattern If your machine is equipped with the optional Selectable Control Pattern Switch, this alert indicator will flash until a control pattern is selected via the switch. This alert indicator will light when the H-Control Pattern is activated. This alert indicator will also be lit when the machine is equipped with the Dedicated H-Control Pattern option.

Note: Refer to Operation and Maintenance Manual, “Operator Controls - Joystick Controls” for information about the joystick control patterns.

i07942720

Fire Suppression System
(If Equipped)

SMCS Code: 1000; 7000; 7401; 7605; 7615

The machine is monitored with a detection and actuation system which is typically connected to a fire suppression system for 24-hour fire suppression protection. The operator of the machine should be provided with hands-on training by an authorized OEM Manufacturer.

Front Panel Indicators

Illustration 269 g06410996

Fire Suppression System Controller

(1) Power LED
(2) Release and Detection LEDs
(3) Push to Activate Button/LED
(4) Delay/Reset/Silence Button

Machines built with the optional factory installed fire suppression systems, are equipped with manual actuators. The quantity of actuators may vary, according to the machine. The manual actuators can be triggered by pulling the safety pin and depressing the red button. Prior to actuating the system, the machine should be brought to a complete stop in a safe location with the parking brake engaged.

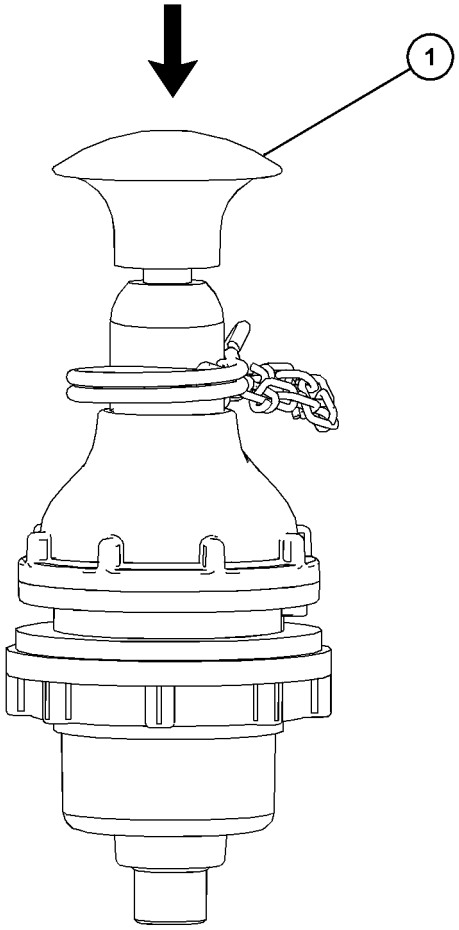

Illustration 270 g06256624

Typical example of fire suppression system manual actuator

(1) Electric Manual Actuator (Quantity may vary)

Power LED (1)

1. Green steady-on indicates normal external power

2. Amber pulsing indicates a power:

- Pulsing once every 30 seconds indicates an external power fault; sounder auto-silences after 10 minutes to conserve power.
- Pulsing once every 10 seconds indicates an internal power fault; sounder auto-silences after 10 minutes to conserve power.

Note: A power fault will continue for up to 72 hours as long as a fault exists or until unit powers down. Contact Authorized ANSUL Distributor for service

3. Off indicates no system power.

Release and Detection LEDs (2)

1. Off indicates normal status.

2. Amber pulsing with sounder indicates a fault condition.

WARNING

Personal Injury or death could result if the fire suppression system is not functioning properly. Ensure that the fire suppression system is in proper working order without any faults or damaged components. Immediately contact an authorized fire suppression distributor for any repairs before operating the machine.

"Push To Activate / Alarm When LIT" LED/Button (3)

- Pulsing twice per second indicates an Alarm Condition and Time Delay period starts countdown.
- Pulsing four times per second indicates the last 5 seconds of the Time Delay before suppression activation (release) occurs.
- Steady-on for 10 sec. indicates Release Activated.

Note: The sounder will always match the LED pulse rate

"Delay/Reset/ Silence" Button (4) has 3 functions:

- Restart Time Delay: Press and release to restart the time delay cycle during alarm condition, before the suppression system activates.
- Silence sounder (post discharge or fault notification) for 2 hours: Press and release to silence sounder; LED fault indication will continue until fault is cleared. Any new fault or detection event will reactivate sounder.
- Reset function is for Authorized ANSUL Distributor service technician.

Fill in the System information boxes below:

Fill-In System Information (as installed)

External Power Supply (vehicle battery, power panel, etc.):

_____

Note: Internal backup power provides approximately 72 hours of power during normal operating conditions.

Selected Time Delay Period (seconds): ☐ 5 ☐ 15

Pressure Switch Auxiliary Operation: _____

_____

_____

Illustration 271 g06411276

Use the following table to document manual actuator location information (as installed)

Fill-In System Information (as installed)

Electric or Pneumatic Manual Actuator Location(s):

_____

_____

_____

_____

Illustration 272 g06411297

Fire Suppression-Manual Actuation

IN CASE OF FIRE:

1. Safely bring machine to complete stop, set brake, and shut off engine.

2. Locate the system controller on the upper right-hand control panel.

3. Break visual seal and open guard door on the system controller.

4. Push the red “PUSH To Activate” button.

5. The fire suppression system will begin Activation.

Note: The red “PUSH To Activate” LED and sounder remain steady-on for 10 seconds during activation (release) of the fire suppression system. The red “PUSH To Activate” LED and sounder continue to pulse once every 10 seconds after the release of the fire suppression material is complete. If conditions allow for safe re-entry of the equipment, push the “DELAY/ Reset/Silence” button to silence the sounder for 2 hours.

6. Safely exit machine and stand-by with supplemental fire fighting equipment if there is re-ignition.

In Case of Fire: Manual Actuation (Method 2)

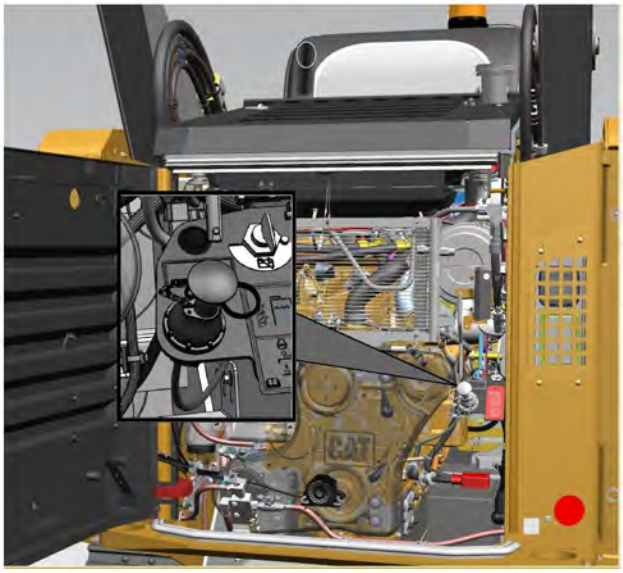

Illustration 273 g06489761

Machines built with the optional factory installed fire suppression systems, are equipped with a manual actuator located in the engine compartment on the right-hand side.

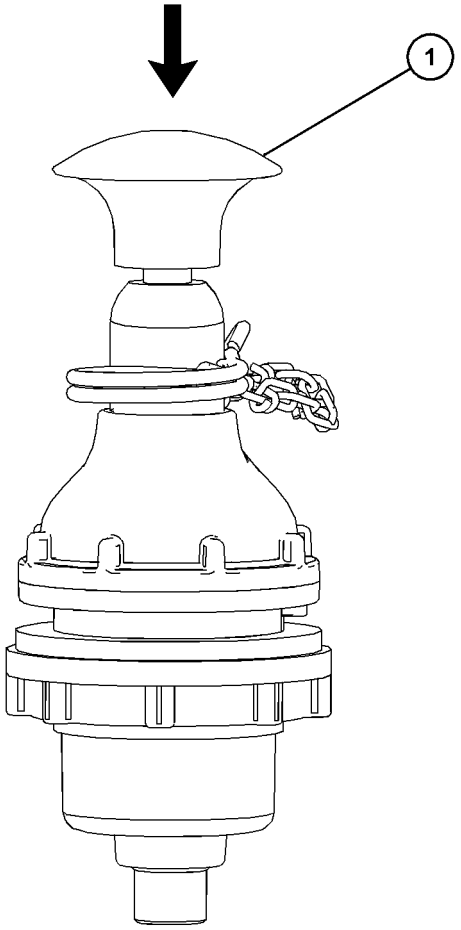

Illustration 274 g06256624

Typical example of fire suppression system manual actuator

(1) Electric Manual Actuator (type and quantity may vary)

1. Safely bring equipment to complete stop, set brake and shut off engine.
2. Locate the manual actuator within the engine compartment on the right-hand side.
3. Trigger the manual actuator by pulling the safety ring pin and depressing the red button.
4. Stand-by with supplemental firefighting equipment if there was re-ignition.

Fire Suppression-Automatic System Actuation

IN CASE OF FIRE:

1. Detector registers alarm condition in hazard area and initiates the time delay notification on display module.
2. “PUSH To Activate / Alarm When Lit” , plus Detection 1 and/or Detection 2 LED plus sounder:
   - Pulse twice per second until the last 5 seconds of the Time Delay period.
   - Pulse four times per second during the final 5 seconds of the Time Delay period.

Note: To restart the Time Delay press and release the gray “DELAY/Reset/Silence” button before the suppression system activates.

- Remain steady-on for 10 seconds during activation (release) of the fire suppression material.
- Pulse once every 10 seconds after the release of the fire suppression material is complete.

3. When Time Delay period begins and the “PUSH To Activate” LED and sounder initiate their warnings, safely stop equipment, set the parking brake and shut off the engine.
4. Safely exit the equipment and stand-by with supplemental firefighting equipment if there is re-ignition.
5. If conditions allow for safe re-entry of the equipment, push the “DELAY/Reset/Silence” button to silence the sounder for 2 hours.

Note: In case of fire and/or system activation, contact your Cat Dealer and an authorized Ansul Distributor service technician before putting machine back into service.

Note: Inspect and service (as needed) the Fire Suppression System every 6 months or after an activation of the system. Contact an authorized ANSUL Distributor service technician for inspection and service of the fire suppression system. Refer to fire suppression manufacturer’s instructions for additional information on troubleshooting, maintenance, and operation of system.

Engine Starting

i08718286

Engine Starting

SMCS Code: 1000; 7000

WARNING

Do not use aerosol types of starting aids such as ether. Such use could result in an explosion and personal injury.

Refer to Operation and Maintenance Manual, Cold-Weather Requirements to prepare the machine for operation in temperatures that are below 0 °C (32 °F). Follow the appropriate warm-up procedures when the machine is operated in temperatures that are below 0 °C (32 °F).

Machine preparation for cold weather includes using the correct hydraulic system oil. The factory fills the hydraulic system with 10W hydraulic oil which has a minimum operating temperature of −20 °C (−4 °F). If the machine will be operated at temperatures below −20 °C (−4 °F), the 10W oil must be replaced with 0W30 hydraulic oil to provide the proper oil viscosity. Refer to Operation and Maintenance Manual, “Lubricant Viscosities and Refill Capacities”. Refer to Operation and Maintenance Manual, SEBU5898, “Cold-Weather Recommendations for Caterpillar Machines”. Refer to Operation and Maintenance Manual, SEBU6250, “Caterpillar Machine Fluids Recommendations”.

NOTICE
Keep the engine speed low until the engine oil pressure alert indicator goes out. If the alert indicator does not go out within ten seconds, stop the engine and investigate the cause before starting again. Failure to do so can cause engine damage.

NOTICE
If you fail to follow the steps described below, damage to the engine or damage to the hydraulic system may occur.

1. Fasten the seat belt.
2. Pull the armrests downward.
3. Before the engine is started, check for the presence of bystanders or maintenance personnel. Ensure that all personnel are clear of the machine. Briefly sound the forward horn before you start the engine.
4. Move the engine speed control knob to low idle.
5. Turn the engine start switch key to the ON position. On machines equipped with the Standard Display, wait for the cold starting aid alert indicator light to go out. On machines equipped with the Advanced Display, wait for the LCD display to load the Welcome screen. On any machine with security enabled, enter a valid PIN. Refer to Operation Maintenance Manual, “Operator Controls, Right Side Controls” for more information on the Anti-Theft Security System.

NOTICE
If the engine fails to start after 10 seconds, disengage the starter. Wait 30 seconds and repeat the procedure. Do not allow the starter motor to run continuously for more than 20 seconds.

6. Turn the engine start key to START position to start the engine. Release the key after the engine has started.

Note: If the machine is equipped with the optional Selectable Control Pattern feature, a control pattern must be selected before the parking brake can be disengaged. Refer to Operation and Maintenance Manual, “Operator Controls, Left Side Controls, and Operator Controls, Joystick Controls” for more information on the Selectable Pattern Control switch and available joystick control patterns.

7. Disengage the parking brake.
8. Run the engine for 5 minutes before performing the following procedure. Run the engine at half throttle. Raise the lift arms several feet and hold the work tool joystick control in the TILT BACK position for 30 seconds. Release the control for 30 seconds. Hold the work tool joystick control in the DUMP position for 30 seconds. Release the control for 30 seconds. Perform the procedure for 3 minutes.

Note: If you are operating the machine below 0 °C (32 °F), perform the procedure for 8 minutes.

NOTICE
Do not use the hydraulic interlock override function to warm up the machine.

9. Keep all personnel away from the machine. Move the machine slowly to an open area. Repeat Step 8 as you move the machine back and forth for 3 m (10 ft).

Note: More warm-up time may be required if the hydraulic functions are sluggish.

Cold-Weather Requirements

Machine preparation for cold weather includes using the correct hydraulic system oil. The factory fills the hydraulic system with 10W hydraulic oil which has a minimum operating temperature of −20° C (−4° F). If the machine will be operated at temperatures below −20° C (−4° F), the 10W oil must be replaced with 0W30 hydraulic oil to provide the proper oil viscosity. Refer to Operation and Maintenance Manual, "Lubricant Viscosities and Refill Capacities". Refer to Operation and Maintenance Manual, “Cold-Weather Recommendations for Caterpillar Machines” SEBU5898. Refer to Operation and Maintenance Manual, “Caterpillar Machine Fluids Recommendations”SEBU6250.

Refer to the following table for requirements and recommendations for the engine when operating below −18° C (−0° F)

Reference: Refer to the Machine Price List for the appropriate kit part numbers.

Table 32

Cold-Weather Engine Requirements and Recommendations					
			Required		Recommended
Models	**Engine**	**Serial Number Ranges**	**-18°C to -32°C (0°F to -25°F)**	**-33°C to -40°C (-26°F to -40°F)**	**-18°C to -40°C (0°F to -40°F)**
226D3, 232D3, 239D3, 249D3	**C2.2**	All	SAE 0W -40 Engine Oil		Engine Block Heater #1 Diesel or Anti-Gel Additive Battery Disconnect Switch Kit
		All except PWN		Cold Climate Kit	
236D3, 242D3, 246D3, 257D3, 259D3, 262D3,279D3, 289D3	**C3.3B**	All	SAE 0W -40 Engine Oil		Engine Block Heater #1 Diesel or Anti-Gel Additive Battery Disconnect Switch Kit 1000 CCA Battery
		KXL, GK6, ME6, HSX, T7Z, T9X, PF6, KC6, S7E, KEZ, TE9, CW9, TP3, ZB2, W6E, RB9, JX9, Z9E, BT9		Rear Door Cover Kit	
272D3,272D3 XE, 299D3, 299D3 XE	**C3.8**	All	SAE 0W -40 Engine Oil	Rear Door Cover Kit	Engine Block Heater #1 Diesel or Anti-Gel Additive Battery Disconnect Switch Kit 1000 CCA Battery

Engine Torque Limited During DEF Thawing

Note: A 32.5% solution of DEF will begin to crystallize and freeze at −11° C (12° F). At 32.5%, both the urea and water will freeze at the same rate, ensuring that as it thaws , the fluid does not become diluted, or over concentrated. The freezing and thawing of DEF will not cause degradation of the product.

This is only applicable to the models that require Diesel Exhaust Fluid (DEF). When the DEF is frozen, there is no DEF circulating to cool the DEF injector. To prevent the DEF injector from damage, the engine torque is reduced by up to 20%. The message "Engine Derate - Protect against cold temperature" will appear on the monitoring screen of the Advanced Display. Once the DEF is thawed, full engine torque will return automatically. Refer to the engine's Systems Operation manual, DEF Dosing Control System for more information.

Low System Battery Voltage Elevated Low Idle

The low system battery voltage elevated low idle feature will immediately raise the low idle engine speed slightly if the system battery voltage falls below a triggering threshold with the engine speed near low idle. This feature is intended to improve the reliability of charging system components like the alternator and battery and help compensate for increased electrical load resulting from user installed electrical components. The feature will be canceled by the operator when the engine speed is raised by the controls. This feature will automatically cancel if the system battery voltage rises above a predetermined threshold.

Cool Engine Elevated Low Idle (Cold Start)

The cool engine elevated low idle feature will immediately raise the low idle engine speed slightly if the machine senses an ambient temperature or engine coolant temperature below certain thresholds while the parking brake is engaged, hydraulic lockout is engaged, and interlock override is disengaged. This feature is primarily associated with cold startup and is intended to accelerate the warmup of the engine and fluids and improve white smoke cleanup. The feature will be canceled by the operator when the parking brake is disengaged, hydraulic lockout is disengaged, and interlock override is engaged, or the engine speed is raised by the controls. The feature will automatically cancel if the ambient and engine coolant temperatures increase above certain thresholds.

Cold Engine Elevated Low Idle (Parked Idle)

The cold engine elevated low idle feature will slowly increase the engine idle speed to a significantly higher speed when the machine has sat for several minutes with the parking brake is engaged, hydraulic lockout is engaged, and interlock override is disengaged, and the ambient or engine coolant temperature have fallen below certain temperature thresholds. This feature is intended to help prevent certain engine components from damage due to fluids freezing when the machine is left parked in idle. This feature will be canceled by the operator when the parking brake is disengaged, hydraulic lockout is disengaged, and interlock override is engaged. The feature will automatically cancel if the ambient or engine coolant temperature initiating the response increase above certain thresholds. This feature should not be confused with Diesel Particulate Filter Regeneration. Refer to "Diesel Particulate Filter Regeneration" for more information.

Note: There may be other machine conditions required to initiate or terminate any of the elevated low idle modes. Only the primary conditions are listed above.

Turbocharger Protection Mode (Start Up)

Note: It is always recommended to start the engine with the engine speed control knob in the low idle position, and to follow the recommended engine starting & warm up procedures for best engine life.

The turbocharger protection mode helps ensure that proper turbocharger shaft lubrication is achieved before the turbocharger speed increases due to engine speed adjustment and/or load. This is normal and designed to protect vital engine components. This feature results in the following engine behavior relative to throttle position:

- The engine will remain in low idle hold for a few seconds at start-up, regardless of coolant temperature or position of the engine speed control knob or foot pedal.
- After low idle hold, the engine rpm will remain at low idle until either the engine speed control knob or foot pedal is adjusted slightly in either direction. When the engine rpm will begin to increase towards the desired setting.

- The maximum engine rpm will be limited to predetermined values based on coolant temperature and driven via a non-adjustable software map. High Idle will not be available until coolant temperature reaches a safe operating threshold. This warm up period can vary between a few seconds and about a minute based on how cold the ambient temperature is.

Operation

i08723623

Operation Information

SMCS Code: 7000

Fueling the Machine

WARNING

Ultra Low Sulfur Diesel (ULSD) poses a greater static ignition hazard than earlier diesel formulations, with a higher Sulfur content, which may result in a fire or explosion. Consult with your fuel or fuel system supplier for details on proper grounding and bonding practices.

WARNING

To avoid possible injury or death, do not smoke while in an area that contains flammable liquids.

All fuels, most lubricants, and some coolants are flammable.

Keep all fuels and lubricants stored in properly marked containers and away from unauthorized persons.

Fuel leaked or spilled onto hot surfaces or electrical components can cause a fire.

Store all oily rags or other flammable materials in a protective container in a safe place.

Remove all flammable materials such as fuel, oil, and other debris before they accumulate on the machine.

Do not expose the machine to flames, burning brush, etc., if at all possible.

The fuel fill may either be located inside the engine compartment on the right-hand side, or outside the machine at the left rear corner of the frame. Replace the fuel cap and lock into place after fueling the machine.

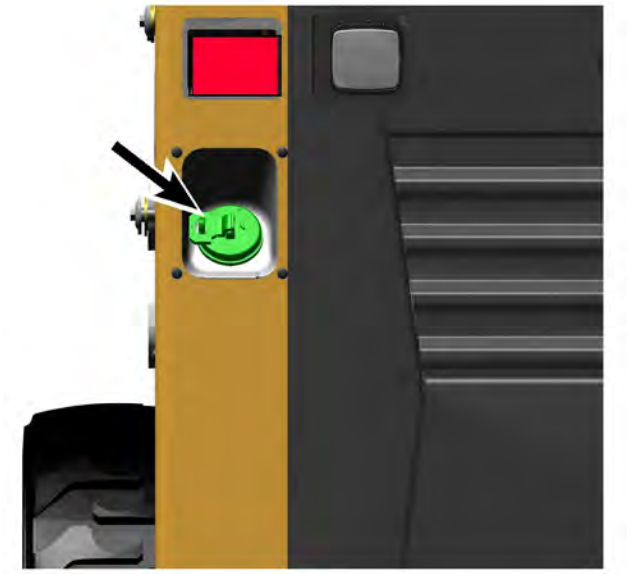

Illustration 275 g06355056

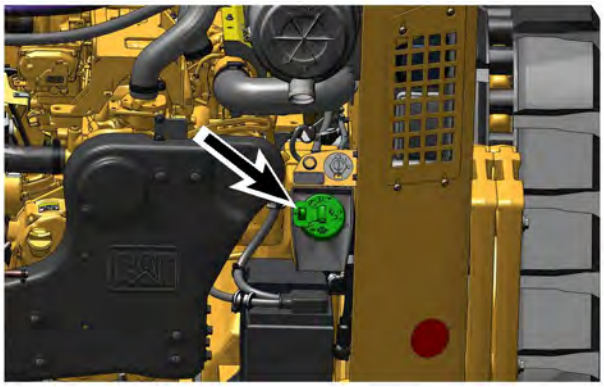

Illustration 276 g06355060

Machine Operating in Waste Handling Application

Operating the machine in a siloxane gas environment (often present at waste handling job sites) will significantly reduce the Clean Emissions Module (CEM) life. Siloxane gas cannot be removed by conventional air filter systems and reacts to silicon dioxide during combustion that plugs the diesel oxidation catalyst (DOC) and diesel particulate filter (DPF). Your Cat dealer can help you identify the presence and level of siloxane gas at your job site.

General Information

Note: The 299D3 XE Land Management models have two fuel tanks, one on either side of the rear corners of the machine. The fuel cap for each tank is located on the top of the tank, under a hinged guard.

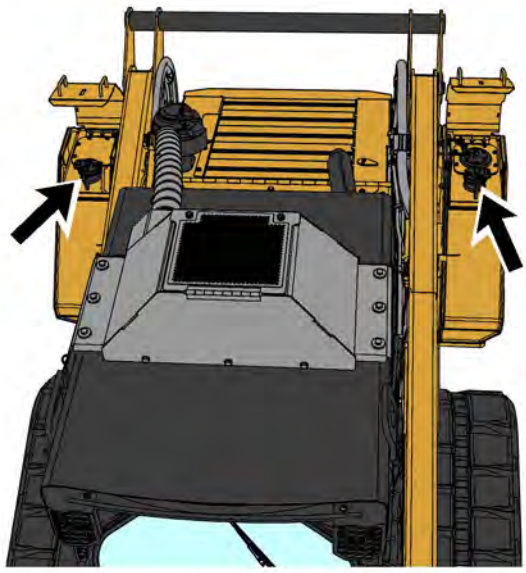

Illustration 277 g06407687

To prevent injury, make sure that no people are working on the machine or near the machine. To prevent injury, keep the machine under control at all times.

Reduce engine speed when you maneuver in tight quarters or when you are going over a hill.

1. Adjust the operator seat.

2. Fasten the seat belt.

3. Lower the armrests.

4. Start the engine and allow the machine to warm up. Refer to Operation and Maintenance Manual, “Engine Starting”.

5. Disengage the parking brake.

6. Raise all lowered work tools and attachments to negotiate any obstacles.

7. Smoothly move the speed and direction control for the desired direction and speed.

Do not allow the machine to overspeed when you go downhill. Move the joystick toward the NEUTRAL position to reduce the speed of the machine when you are going downhill. For additional information, refer to “Operating on a Slope”.

Always put the heaviest end of the machine uphill when you are working on an incline.

Fully lower the loader arms onto the stops when you are digging with the machine. Digging with the loader arms in the fully lowered position will transfer the stress that is placed on the loader arm into the frame.

NOTICE
The use of this machine in certain applications can cause premature wear and/or failure of the tracks. Applications that may cause premature wear and/or failure of the tracks include: use in rocky terrain, use in gravel, use in concrete demolition and use in terrain where metal debris is present.

Damage to the tracks that is caused from using the machine in these conditions is not covered under warranty.

Avoid any situation that causes the tracks of the machine to spin on the ground. Avoid spinning the tracks to extend the life of the track.

Note: While you use steel tracks that go over the tires, the work tools may not engage the work tool coupler properly. Work tools may not properly engage the ground. **Steel tracks that go over the tires should only be used with pneumatic tires.** The loader arms may contact the steel tracks which may damage to the machine. When you use steel tracks that go over the tires, the interval for checking the drive chains should be reduced to every 100 Service Hours. Refer to Operation and Maintenance Manual, “Drive Chain Tension - Check/Adjust” for proper service of the drive chain. The use of rubber tracks that go over the tires is not recommended.

Operating on a Slope

When necessary to travel across a slope, never exceed a slope that is greater than 3 to 1 (18.4°).

When possible, avoid operating the machine across a slope. When possible, operate the machine up a slope and down a slope. Never exceed a slope that is greater than 25 degrees for continuous fore/aft slope operation and 35 degrees intermittent fore/aft operation. The engine has an intermittent rating of 2 minutes. Do not turn the machine while you are operating on a slope.

NOTICE
When it is necessary to operate the machine on a slope, keep bucket loads light in order to decrease the possibility of derailing the tracks.

NOTICE
If the correct method for turning is not followed, the tracks may derail.

When necessary to travel across a slope, the following steps should always be followed:

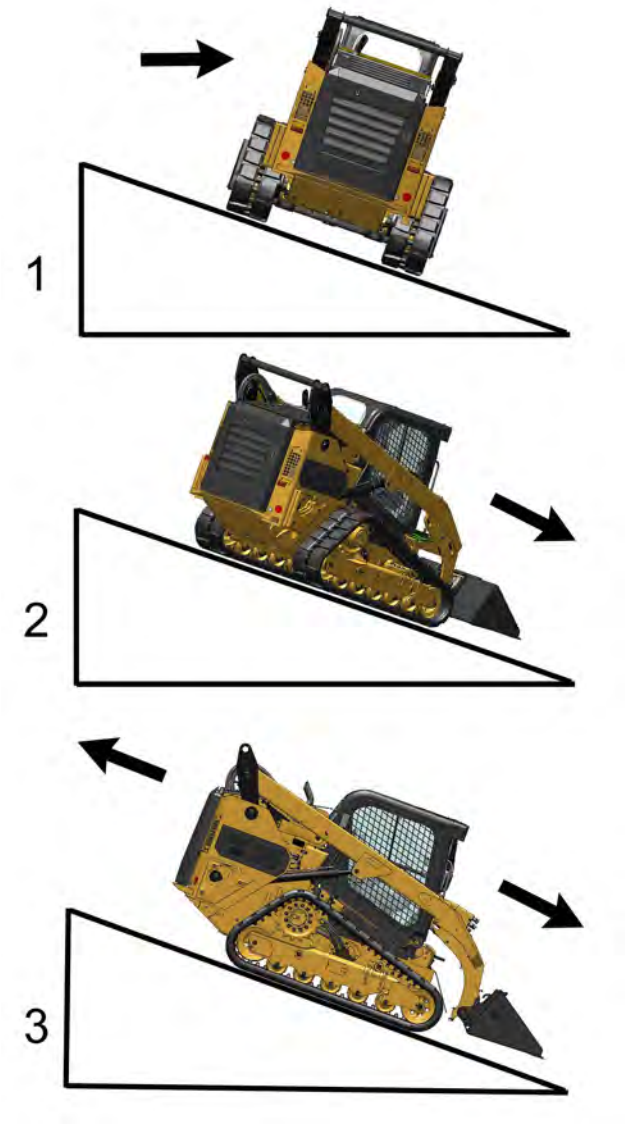

Illustration 278 g06355085

1. Stop the machine. Turn the machine slowly while you are backing down the slope.

Note: Do not back up a hill to turn.

2. Position the machine so that the front of the machine faces the direction for travel that is desired.

Operating on a Transition

Illustration 279 g06355444

NOTICE
Avoid operating this machine on transitions. Operating this machine on transitions may cause the tracks to derail.

When the machine is operated over a transition, the tracks may not be supported fully.

When the tracks are not supported fully, the wheels may ride on top of the drive lugs of the tracks. The track will derail if you continue to travel over the transition.

If you must travel over a transition, travel the machine at 90° to the transition. Do not perform hard turns or fast turns when you are operating the machine over the transition.

Counterrotate turn

For maximum life of the undercarriage, use more gradual turns while you slowly move forward or reverse. Gradual turns will help minimize wear on the track and wear on the wheels. Only use counter rotate turns if necessary. Sharp turns will increase the wear on the components of the undercarriage.

i07678674

Quick Disconnect Couplings Operation

SMCS Code: 5057

Release any stored hydraulic fluid pressure in the system before connecting or disconnecting the work tool's hydraulic lines. Refer to Operation and Maintenance Manual, Work Tool Coupler Operation Hydraulic System Pressure Relief for the proper method for your machine.

Remove the dust caps from the couplings which will be used and assemble to keep clean.

Inspect the couplings for damage and replace any coupling believed to be damaged. Never operate the machine with a damaged quick disconnect coupling.

Ensure that the faces of the coupling halves are clean to prevent dirt inclusion.

Note: Identify the style of couplings on the machine and follow the appropriate procedure below.

Push-to-Connect Style Coupling

To connect the work tool, hold the faces of the male and female halves flatly together and push the work tool's hose in until the female coupling's locking sleeve snaps forward completely. Pull back on the hose forcefully to ensure that the coupling halves are locked together.

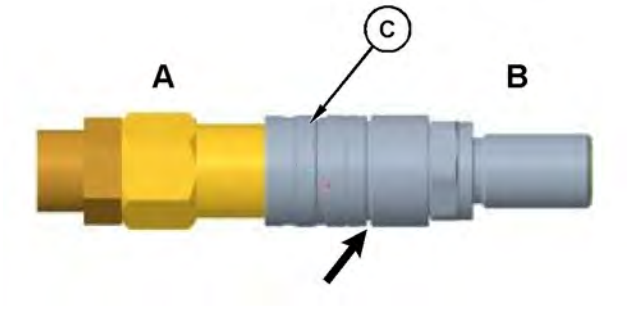

Illustration 280 g06392610

Improperly Coupled

(A) Male
(B) Female
(C) Locking Sleeve

Locking sleeve (C) has not snapped forward. There is no audible "Click".

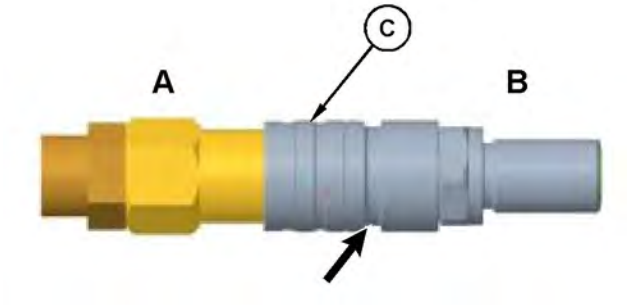

Illustration 281 g06392628

Properly Coupled

(A) Male
(B) Female
(C) Locking Sleeve

Locking sleeve (C) has snapped forward. There is an audible "Click".

To disconnect the work tool, push the hose further into the machine's coupling block (about 3 mm) and hold in this position for about 5 seconds to relieve the hydraulic pressure.

Slide the female coupling's locking sleeve back fully while pulling the work tool's hose away from the machine until they separate.

Ensure that the dust caps are clean and install on open couplers to prevent system contamination.

Note: The couplers may be extremely hot after use. Wear suitable protection

Screw-to-Connect Style Coupling

To connect the work tool, screw the male and female halves together by turning the locking sleeve on the female coupler. During connection the machine-side locking sleeve is turned counterclockwise and the work tool-side locking sleeve is turned clockwise.

Once the halves are coupled fully, the locking sleeve will snap forward over the locking ring, and an audible "Click" may be heard. Do not put into service if the locking sleeve does not slide forward abruptly, completely covering the locking ring. There should be no visible gap between the male and female halves before use.

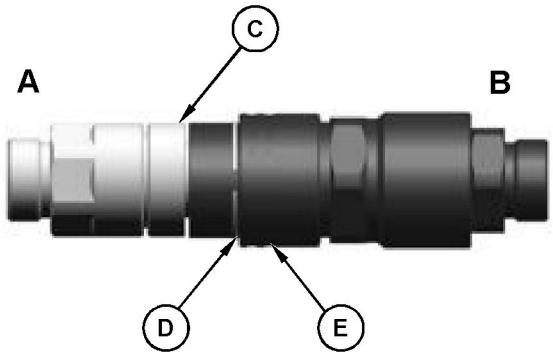

Illustration 282 g06392642

Improperly Coupled

(A) Male
(B) Female
(C) Visible Gap
(D) Exposed Locking Ring
(E) Locking Sleeve

Locking sleeve (E) has not snapped forward. There is no audible "Click".

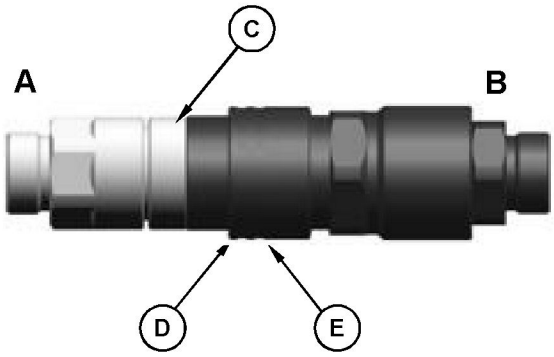

Illustration 283 g06392678

Properly Coupled

(A) Male
(B) Female
(C) No Visible Gap
(D) No Visible Locking Ring
(E) Locking Sleeve

Locking sleeve (C) has snapped forward. There is an audible "Click".

To disconnect the work tool, slide the locking sleeve back and unscrew the couplers until separate. It may be necessary to slightly rescrew the coupler halves together first before the locking sleeve will slide back freely.

During disconnection the machine-side locking sleeve is turned clockwise and the work tool-side locking sleeve is turned counterclockwise.

Ensure that the dust caps are clean and install on open couplers to prevent system contamination.

Note: The couplers may be extremely hot after use. Wear suitable protection. A specially sized wrench is available to aid disconnection. Contact your Cat Dealer for more information.

i07373495

Work Tool Coupler Operation

SMCS Code: 6129; 7000

WARNING

Improper Attachment of the Work Tool could result in injury or death.

Do not operate the machine without confirmation that the coupler pins are fully engaged. Follow the operating procedures in the Operation and Maintenance Manual.

Hydraulic System Pressure Relief

These procedures are used to relieve the system pressure that may be stored in the machine's auxiliary hydraulic lines. Relieve the hydraulic system pressure before attaching or removing work tools or servicing the hydraulic system.

Coupling Method (Primary)

If the machine is equipped with connect-under pressure style couplings, push the face of the coupling inwards (towards machine) and hold for 5 seconds. This may also be accomplished by pushing the couplers of the machine and work tool together to displace the machine's coupling face.

Joystick Method (Alternate)

The machine's system pressure may be relieved by operating the auxiliary hydraulic controls in each direction several times when the following conditions are met: operator is in the seat with the armrests down, the engine key start switch is in the ON position but the engine is not running, and the parking brake has been released.

Pressure Relief Knob Method (Alternate)

Note: Pressure Relief Knob is only available on XE machines.

Pull the knob out & then tilt the knob up and hold for 5 seconds. See "Auxiliary Hydraulic Controls".

Illustration 284 g06407704

Attaching the Work Tool

Note: Before you install the work tool, inspect the coupler and the work tool mounting bracket for any wear or for any damage. Ensure that the work tool mounting bracket and the face of the coupler are clean. Ensure that the coupler has no accumulation of material. Refer to Operation and Maintenance Manual, “Quick Coupler - Clean/Inspect” and Operation and Maintenance Manual, “Work Tool Mounting Bracket - Inspect” for inspection procedures.

1. Position the work tool on a level surface. Move the hydraulic lines (if equipped) for the work tool and electrical lines (if equipped) away from the work tool mounting bracket.

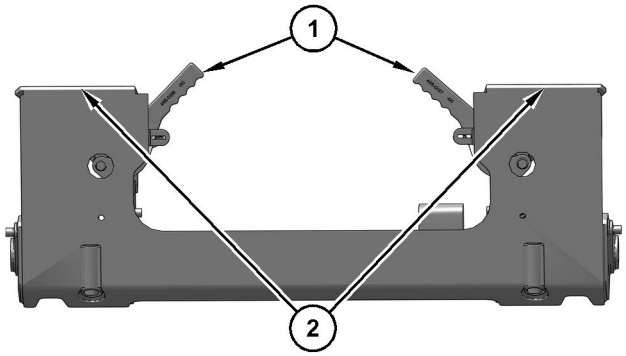

Illustration 285 g06408653

2. If the machine is equipped with a manual quick coupler, ensure that the levers(1) for the coupler are in the DISENGAGED position. If the machine is equipped with an electrical or hydraulic quick coupler, refer to Operation and Maintenance Manual, “Operator Controls” for details on the location and the operation of the coupler control.

3. Enter the machine.

4. Fasten the seat belt and lower the armrests.

5. Start the engine.

6. Disengage the parking brake.

7. Tilt the quick coupler assembly forward.

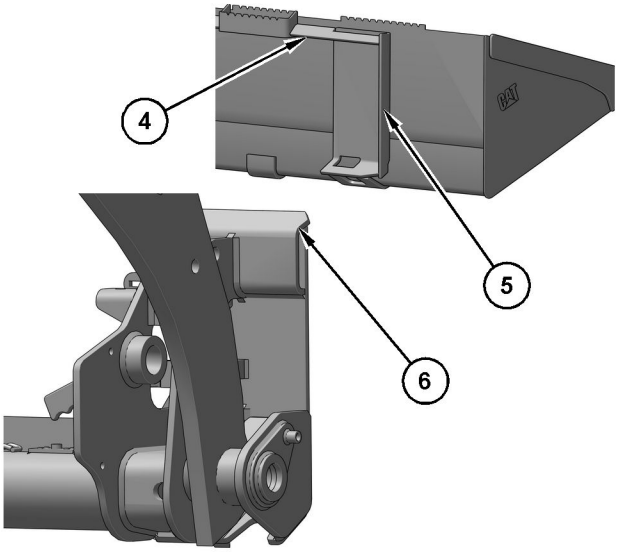

Illustration 286 g06408630

8. Align the quick coupler assembly (6) between the outer plates (5) of the mounting bracket. Move the quick coupler assembly under the angled plate (4) of the mounting bracket and rack back the work tool.

9. Fully lower the loader arms.

WARNING

Improper attachment of the work tool could result in injury or death. If the work tool touches the ground, the work tool may move away from the coupler. Do not allow the work tool to touch the ground until the coupler pins are fully engaged.

10. Turn the engine start switch key to the OFF position to stop the engine.

11. Exit the machine.

Note: If you are installing a material handling arm that is not equipped with the optional center step, do not exit the machine. A second person needs to perform steps 12 through step 14.

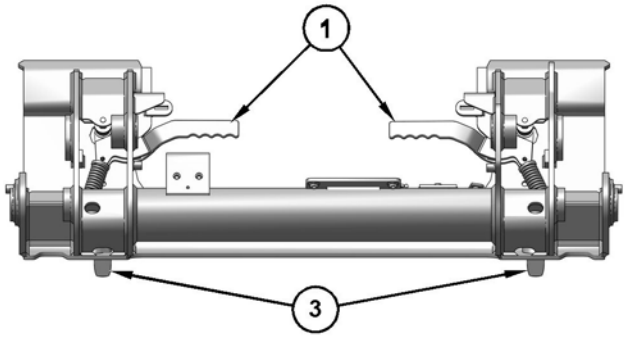

Illustration 287 g06408603

12. Engage the coupler pins(3). If the machine is equipped with a manual quick coupler, ensure that the levers(1) for the coupler are in the ENGAGED position. If the machine is equipped with a hydraulic coupler, refer to Operation and Maintenance Manual, “Operator Controls” for details on engaging the coupler pins.

13. If the work tool requires hydraulics, refer to the following procedure to connect the hydraulic hoses.

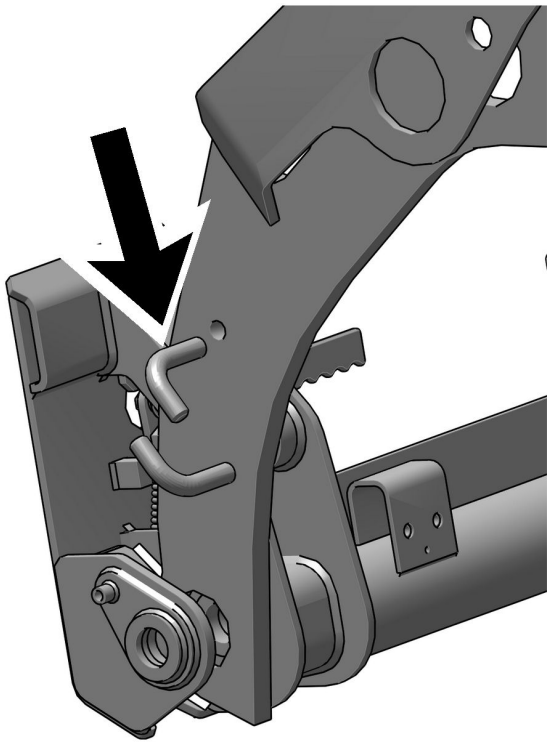

Illustration 288 g06408595

a. Route the hydraulic hoses through the hose guide on the machine to prevent damage to the hoses. Not all work tools require the hydraulic hoses to be routed through the hose guide. The work tool Operation and Maintenance Manual will inform you if the hydraulic hoses need to be routed through the hose guide. Cat work tools require the hoses to be routed through the hose guide.

b. Ensure that the quick connect couplers are clean. Visually inspect the couplers for corroding, cracking, damage, or excessive wear. Replace the couplers if necessary.

c. Relieve the system pressure that may be stored in the machine's auxiliary hydraulic lines. See Hydraulic System Pressure Relief.

d. Connect the auxiliary hydraulic hoses for the work tool to the machine. Refer to section in this Operation and Maintenance Manual, Quick Disconnect Couplings Operation for a complete explanation on the machine's hydraulic and electrical outputs. Full connection is made when the sleeve of the female coupler slides forward.

e. If the work tool is equipped with electrical lines, then route the electrical lines with the hydraulic hoses. Connect the wire harness to the electrical connector (EC) on the host machine. Check the connections to ensure that the connections are properly secured. Check the connections on the work tool to ensure that the connections are in the correct receptacle.

Note: If your High Flow work tool does not have a wiring harness, a Jumper Plug should be installed on the electrical plug for the work tool control. Without this Jumper Plug, the machine will not provide high flow to the work tool. Consult your Cat dealer for the current part number for the Jumper Plug.

f. If the work tool is equipped with a water line, then connect the water line from the work tool to the connector on the machine. Move the water line to a position that is away from the work tool mounting bracket.

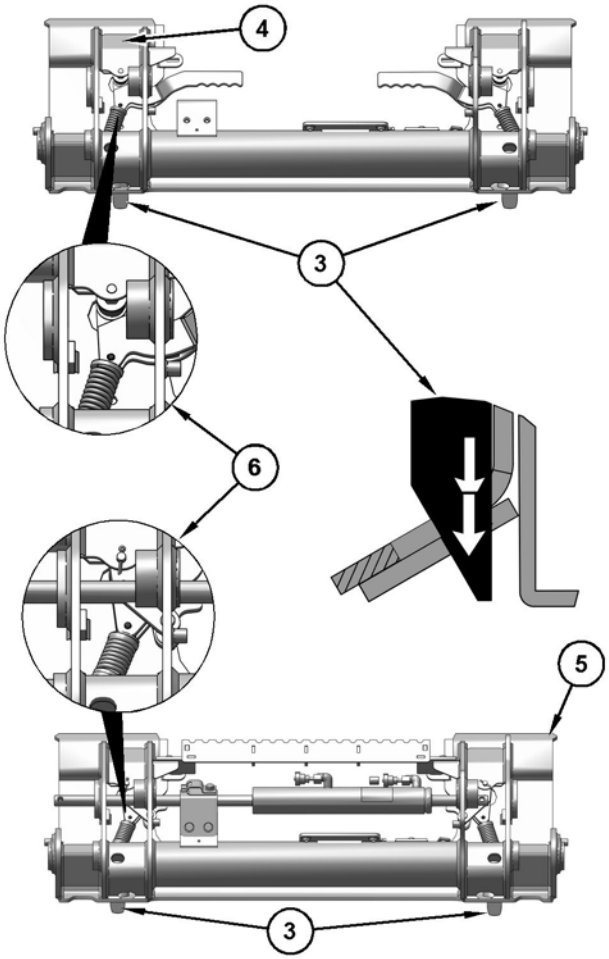

Illustration 289 g06408578

(3) Coupler Pins
(4) Manual Work Tool Coupler
(5) Electric or Hydraulic Work Tool Coupler
(6) Lever for the Coupler Pin

14. Visually ensure that both coupler pins (3) are extending out of the holes in the work tool mounting bracket.

15. Use the following procedure to verify engagement of the coupler pins.

a. Enter the machine.

b. Fasten the seat belt and lower the armrests.

c. Start the engine.

d. Disengage the parking brake.

e. Raise the work tool off the ground.

f. Visually inspect the coupler pins (3) to ensure that the pins are fully extended through the work tool.

g. Visually inspect the lever (6) that holds the coupler pins to ensure that the lever is in the proper position.

h. Activate the tilt control to tilt the work tool downward.

i. Apply down pressure on the work tool.

Note: The work tool Operation and Maintenance Manual will inform you if forward pressure should not be applied on a work tool.

j. Move the machine backward. Ensure that the coupler pins do not disengage from the work tool.

16. Test the work tool for leaks and for proper operation.

Removing the Work Tool

WARNING

Disengaging the coupler pins will release the work tool from control of the operator.

Serious injury or death may result from disengaging the work tool when it is in an unstable position or carrying a load.

Place the work tool in a safe position before disengaging the coupler pins.

NOTICE

Auxiliary hoses for work tools must be disconnected before the Hydraulic Quick Coupler is disengaged.

Pulling the work tool with the auxiliary hoses could result in damage to the host machine or the work tool.

1. Position the machine on level ground.

2. Lower the work tool to the ground.

3. Rack back the work tool until the work tool is slightly off the ground.

4. Turn the engine start switch key to the OFF position to stop the engine.

5. If the work tool requires hydraulics, the hydraulic system pressure must be released.

6. Relieve the system pressure that may be stores in the machine's auxiliary hydraulic lines. See Hydraulic System Pressure Relief.

7. Disconnect the auxiliary hydraulic hoses for the work tool from the machine. Refer to Quick Disconnect Couplings Operation.

Note: If protective caps are available, clean the caps thoroughly and install protective caps over the quick connect couplers.

8. If hoses are routed through the hose guide, remove the hoses from the hose guide. Move the hoses to a position that is away from the work tool mounting bracket.

Note: Connect the hoses for the work tool together. Connecting the hoses together will reduce the probability of contaminating the hydraulic system. Connecting the hoses together will reduce the buildup of pressure in the hoses. Connecting the hoses together will ease the connection of the hoses to the machine.

9. If the work tool is equipped with an electrical line, then disconnect the wire harness from the connector on the machine. If protective caps are available, install protective caps over the electrical connectors.

10. If the auxiliary electrical line is routed through the hose guide, remove the line from the hose guide. Move the auxiliary electrical line to a position that is away from the work tool mounting bracket.

11. If the work tool is equipped with a water line, then disconnect the water line from the connector on the machine. Move the water line to a position that is away from the work tool mounting bracket.

Note: If you are removing a material handling arm that is not equipped with an optional center step, do not exit the machine. A second person needs to perform step 12.

12. Disengage the coupler pins. If the machine is equipped with a manual quick coupler, ensure that the levers for the coupler are in the DISENGAGED position. If the machine is equipped with an electrical or hydraulic quick coupler, refer to Operation and Maintenance Manual, “Operator Controls” for details on disengaging the coupler pins with the coupler control.

13. Enter the machine.

14. Fasten the seat belt and lower the armrests.

15. Start the engine.

16. Disengage the parking brake.

17. As you slowly back away from the mounting bracket, tilt the quick coupler assembly forward until the top of the quick coupler assembly clears the angled plate.

18. Back away from the work tool.

Removing the Work Tool if the Hydraulic Quick Coupler Malfunctions

⚠ WARNING

Disengaging the coupler pins will release the work tool from control of the operator.

Serious injury or death may result from disengaging the work tool when it is in an unstable position or carrying a load.

Place the work tool in a safe position before disengaging the coupler pins.

NOTICE

Auxiliary hoses for work tools must be disconnected before the Hydraulic Quick Coupler is disengaged.

Pulling the work tool with the auxiliary hoses could result in damage to the host machine or the work tool.

Note: The hydraulic quick coupler only works while the engine is running, the hydraulic interlocks are made, and the machine has hydraulic power.

Using suitable blocking material, block the machine to ensure it does not move unexpectedly.

If the hydraulic quick coupler fails to function due to loss of machine electrical or hydraulic power, slightly open the hydraulic lines at the service connectors under the lift arm cross member. Provide a means to capture any hydraulic fluid in a suitable catch container. Insert a pair of 3/8" square drivers into the square openings of the linkage flags and rotate each towards the centerline of the machine to disengage the work tool retention pins from the work tool.

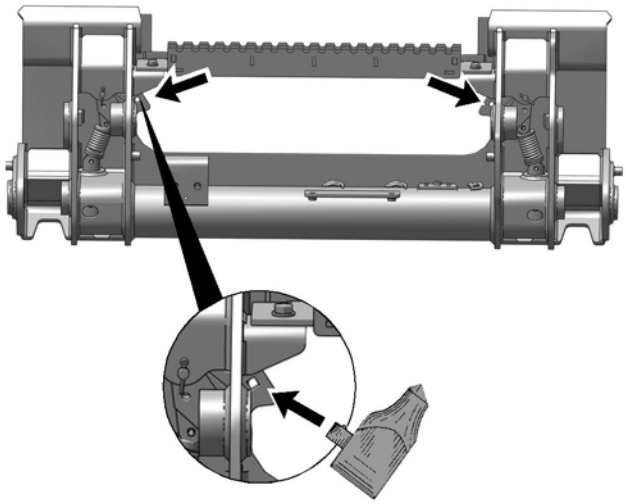

Illustration 290 g06408674

with 3/8" square driver rotate towards centerline

i07695485

Material Handling Arm Operation

SMCS Code: 6542; 6700; 7000

Illustration 291 g06397626

(1) Location of Optional Center Step
(2) Tie-Down Point
(3) Lifting Point 2
(4) Shackle
(5) Hook Clasp
(6) Hook
(7) Lifting Point 1
(8) Stored location of Position Lock Pin

Inspect the material handling arm and the attachments for wear and damage. Ensure that the load is properly attached to the material handling arm before you operate the machine.

Note: The physical size and the weight of the load determines the lifting point that is appropriate. Whenever it is possible, use the lifting point 1. This will improve the stability and this will reduce the movement of the load. Refer to the Operation and Maintenance Manual, “Material Handling Arm Rated Load” for the limitations on the weight.

Note: Use only Caterpillar 9V-2714 Hook and Caterpillar 9V-2715 Shackle to attach a load to the material handling arm. Never use an open hook. Use a line that is rated for 2.5 times the weight of the load.

WARNING

Do not allow anyone to be near a suspended load unless the position lock pin is installed. If the lift arms must be raised to handle a tall load, do not allow anyone to be near the suspended load unless the lift arms are blocked. Failure to follow the instructions or heed the warnings could result in injury or death.

Two Person Operation

Attaching A Load

1. Verify that the load does not exceed the weight limit. Refer to the Operation and Maintenance Manual, “Material Handling Arm Rated Load” for the rated load capacities.
2. Keep all personnel out of the work area at all times, except when you are attaching or removing a load.
3. Enter the machine. Start the engine.
4. Disengage the parking brake.

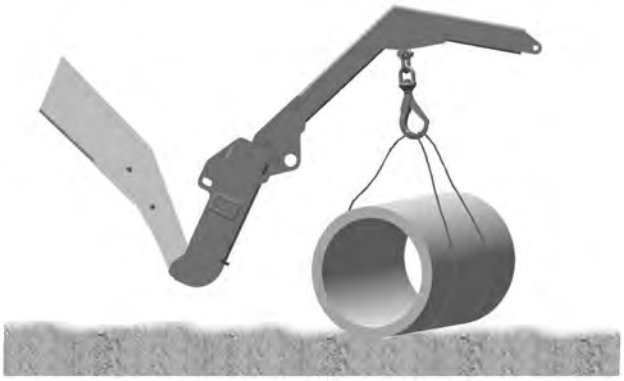

Illustration 292 g06399845

5. Keep the loader arms in the fully lowered position. Slowly position the material handling arm until either lifting point 1 or the lifting point 2 is directly above the load.
6. Tilt the material handling arm forward until the hook is slightly higher than the load in order to minimize swinging of the load.
7. Stop the engine.
8. Wait as the second person attaches the load securely to the hook. The second person needs to ensure that the hook clasp is in the locked position.
9. Ensure that ALL personnel have left the work area.
10. Start the engine.
11. Disengage the parking brake.
12. Slowly tilt back the material handling arm until the material handling arm is fully tilted back.
13. Stop the engine.

Illustration 293 g06399849

14. Wait as the second person installs the position lock pin through the hole in the material handling arm and the hole in the loader arm of the machine.

Note: This will prevent the material handling arm from tilting forward.

15. Wait as the second person secures the load to the tie-down points with a suitable line in order to minimize load swing.

Note: Do not move the load when you are securing the load. Do not pull the load toward the material handling arm when you are securing the load to the tie-down points.

16. Wait as the second person removes the position lock pin. Wait as the second person places the pin in the STORED position on the material handling arm.

Removing a Load

1. Slowly tilt back the material handling arm until the material handling arm is fully tilted back. Lower the loader arms fully.
2. Stop the engine.

3. Wait as the second person installs the position lock pin through the hole in the material handling arm and the hole in the loader arm of the machine.
4. Wait as the second person removes the line that secures the load to the tie-down points.
5. Wait as the second person removes the position lock pin. Wait as the second person places the pin in the STORED position on the material handling arm.
6. Remove all personnel from the work area.
7. Start the engine.
8. Disengage the parking brake.
9. Lower the load to the ground.
10. Stop the engine.
11. Wait as the second person removes the load from the hook.
12. Remove all personnel from the work area.
13. Start the engine.
14. Disengage the parking brake.
15. Slowly tilt back the material handling arm until the material handling arm is fully tilted back.
16. Back away from the load.

One Person Operation

Note: The material handling arm must be equipped with a center step in order to do the one person operation.

Attaching the Load

1. Verify that the load does not exceed the weight limit. Refer to the Operation and Maintenance Manual, “Material Handling Arm Rated Load” for the rated load capacities.
2. Keep all personnel out of the work area at all times, except when you are attaching or removing a load.
3. Enter the machine. Start the engine.
4. Disengage the parking brake.

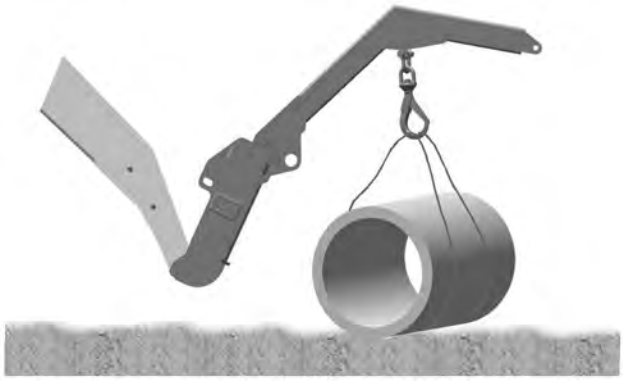

Illustration 294 g06399845

5. Keep the loader arms in the fully lowered position. Slowly position the material handling arm until either lifting point 1 or lifting point 2 is directly above the load.
6. Tilt the material handling arm forward until the hook is slightly higher than the load in order to minimize swinging of the load.
7. Stop the engine. Exit the machine.
8. Attach the load securely to the hook. Ensure that the hook clasp is in the LOCKED position.
9. Keep all personnel out of the work area.
10. Enter the machine. Start the engine.
11. Disengage the parking brake.
12. Slowly tilt back the material handling arm until the material handling arm is fully tilted back.
13. Stop the engine. Exit the machine.

Illustration 295 g06399849

14. Install the position lock pin through the hole in the material handling arm and the hole in the loader arm of the machine.

15. Secure the load to the tie-down points with a suitable line in order to minimize load swing.

Note: Do not move the load when you are securing the load. Do not pull the load toward the material handling arm when you are securing the load to the tie-down points.

16. Remove the position lock pin and place the pin in the STORED position on the material handling arm.

Removing a Load

1. Fully tilt back the material handling arm. Fully lower the loader arms.

2. Stop the engine. Exit the machine.

3. Install the position lock pin through the hole in the loader arm of the machine.

4. Remove the line that secures the load to the tie-down points .

5. Remove the position lock pin and place the pin in the STORED position on the material handling arm.

6. Keep all personnel out of the work area.

7. Enter the machine. Start the engine.

8. Disengage the parking brake.

9. Lower the load to the ground.

10. Stop the engine. Exit the machine.

Note: Make sure that the load is stable.

11. Remove the load from the hook.

12. Keep all personnel out of the work area.

13. Enter the machine. Start the engine.

14. Disengage the parking brake.

15. Slowly tilt back the material handling arm until the material handling arm is fully tilted back.

16. Back away from the load.

Traveling with a Load

1. Ensure that all personnel have left the work area.

2. Start the engine.

3. Disengage the parking brake.

4. Raise the load so that the load is slightly off of the ground.

5. Slowly travel to the destination. Keep the load as close to the ground as possible. Travel up slopes with the load uphill. Travel down slopes with the load uphill. Do not travel across slopes.

i08463536

Pallet Forks Operation

SMCS Code: 6700; 7000

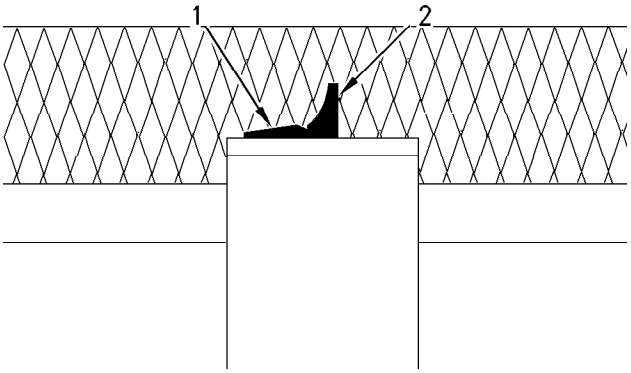

Illustration 296 g00955937

The “type 1” pin that is in the UNLOCKED position (2) and the LOCKED position (1).

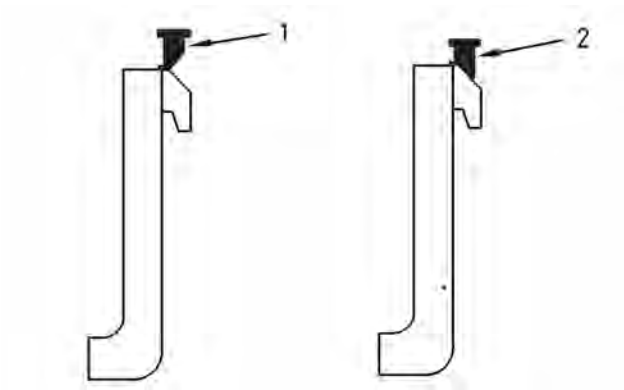

Illustration 297 g00955964

The “type 2” pin that is in the UNLOCKED position (1) and the LOCKED position (2).

1. Put the fork tines in the UNLOCKED position. Space the fork tines as far as possible from each other.
2. Put the fork tines in the LOCKED position.
3. Slowly, move the machine into position and engage the load. The machine should be square with the load. Space the forks evenly between the pallet stringers.
4. Move the machine forward until the load contacts the carriage.
5. Lift and lower the load carefully.
6. Carefully lower the load while you tilt the forks back to the travel position.

Travel with the load as low as possible while you still maintain ground clearance.

Travel with the load uphill on upgrades and on downgrades.

Pallet Fork Tine Operation

1. Place the lift arms fully down and adjust the coupler tilt until the front face of the fork carriage assembly is vertical.

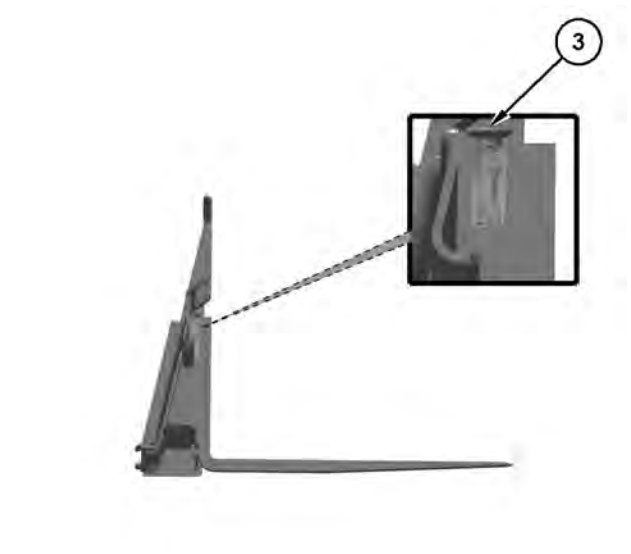

Illustration 298 g06673401

2. On the tine, unlock the pin (3).
3. Move the tine to the desired position by applying side force, alternating between the top or bottom of the tine.
4. Once close to the desired position, lock the pin (3) on the tine and continue moving the tine until the pin locks down into one of the upper carriage rail notches.
5. Adjust the tine as needed to confirm that tine is in a vertical position from the front and side views.

6. Repeat steps 2 - 5 for the second tine.

i07695477

Angle Blade Operation

SMCS Code: 6060; 7000

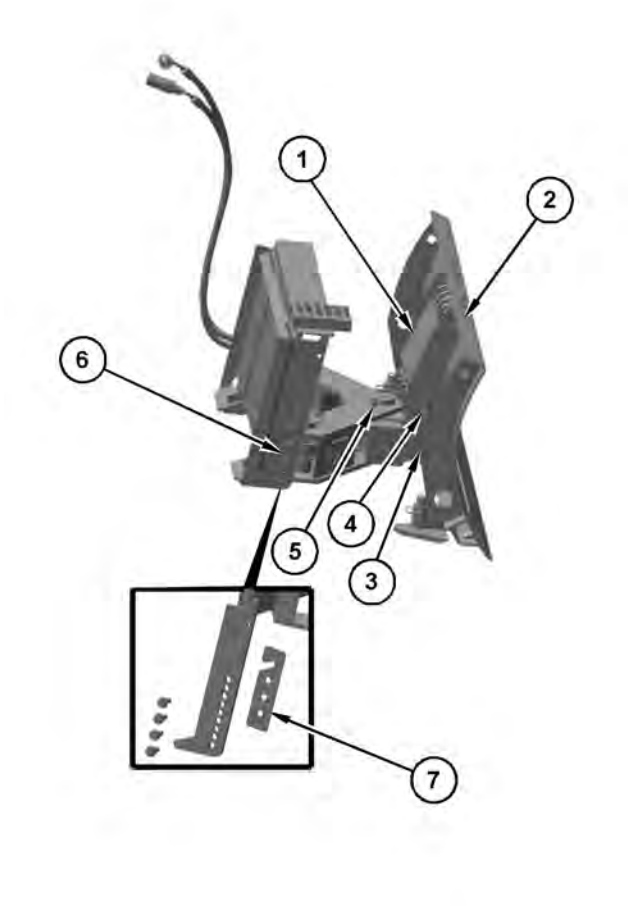

Illustration 299 g06399841

Height Adjustment

In order to properly adjust the height of the blade, use the following procedure:

1. Start the engine.

2. Position the blade so that the vertical pivot pin (5) is in the VERTICAL position.

3. Move the angle of the blade fully from one side to the other side. The blade cutting edge should remain parallel to the ground.

4. If the blade cutting edge does not remain parallel to the ground, the height of the blade needs to be adjusted. Use the following steps in order to adjust the height:

a. Lower the blade and the frame onto adjustable stands.

b. Stop the engine and remove the ignition key.

c. Remove the bolts (6) for adjusting the height.

d. Move the frame to the desired height.

e. Ensure that the shims are installed. Install the bolts for adjusting the height. Tighten the bolts to a torque of 270 ± 40 N·m (199 ± 30 lb ft).

f. In order to test the adjustment, start the engine.

g. Repeat steps 2 and 3.

Tilt Lock

The angle blade has two modes of operation:

- Locked
- Spring load trip

In order to lock the blade, install the locking pin (4). In the LOCKED position, the blade can be used for heavy operations. The blade will not tilt with the locking pin in the LOCKED position.

There may be lighter operations that allow the blade to tilt. Remove the locking pin and store the locking pin in the cab. This will help prevent damage to the blade or to the frame. If the plowing overcomes 306 kg (675 lb) of spring force, the top of the blade will tilt forward.

i08525959

Work Tool Operation

SMCS Code: 6700; 7000

The following table describes the functionality of approved Cat work tools.

Refer to Operation and Maintenance Manual, “Operator Controls, Joystick Controls, and Operator Controls, Auxiliary Hydraulic Controls” for the location and operation of the joystick controls that are referenced below.

Note: All the work tool functions that are described below are viewed as the operator seated in the machine.

Operate the machine and the work tool slowly in an open area. Check for proper operation of all controls and all protective devices on the machine and the work tool.

Note: During initial operation, unexpected motion may occur due to air in the hydraulic system. Cycle the hydraulic system approximately five times to purge air out of the circuit. You may need to add hydraulic oil to the machine after the machine fills the hydraulic circuits of the work tool. Refer to Operation and Maintenance Manual, “Hydraulic System Oil Level - Check” for the proper procedure for checking the hydraulic oil level.

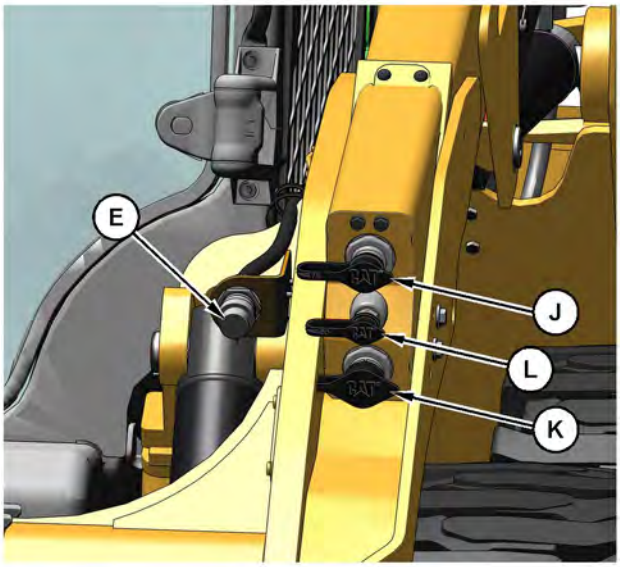

Illustration 300 g06355600

(E) Work Tool Electrical Connector
(J) 1/2 inch Hydraulic Supply
(L) 3/8 inch Case Drain
(K) 1/2 inch Hydraulic Return

For all High Flow work tools, refer to Operation and Maintenance Manual, “Joystick and Auxiliary Hydraulic Controls”. Connect the wiring harness to the electrical plug (E).

Note: If your High Flow work tool does not have a wiring harness, a Jumper Plug should be installed on the electrical plug (E) for the work tool control. Without this Jumper Plug, the machine will not provide High Flow to the work tool. Consult your Cat for the correct part number for your machine.

Simple Hydromechanical Work Tools

Work tools in the following table are approved by Cat. Refer to Operation and Maintenance Manual, “Operator Controls, Joystick Controls, and Operator Controls, Auxiliary Hydraulic Controls” for the location and operation of the joystick controls that are referenced in the table.

Read the manual and understand the instructions and warnings in the Operation and Maintenance Manual for these work tools. Consult your Cat dealer for replacement manuals. Proper care is your responsibility.

Table 33

Operation of Cat Simple Hydromechanical Work Tools								
Work Tool								**Actions**
	Aux5 C2	**Aux6 C1**	**Aux1 A1**	**Aux2 A2**	**Aux3 C-**	**Aux4 C+**	**Aux7**	
Multipurpose Bucket			X					The bucket clam closes.
				X				The bucket clam opens.
All Grapple tools			X					The grapple closes.
				X				The grapple opens.
Angle Blade				X				The blade angles to the left.
			X					The blade angles to the right.
Dozer Blade				X				The blade angles to the left.
			X					The blade angles to the right.
	X			X				The blade tilts down to the left.
	X		X					The blade tilts down to the right.
		X		X				The blade tilts down to the left and the blade angles to the left.
		X	X					The blade tilts down to the right and the blade angles to the right.

Proper operation of the work tool is your responsibility. Do not use the work tool improperly.

Please follow the instructions that are listed below to use the grapple tools safely.

- Do not pry with one rake tine. Use multiple rake tines to loosen material.
- Remove the work tool from the machine before you lift the host machine. Refer to Operation and Maintenance Manual, “Lifting and Tying Down the Machine” for details.
- Do not place the weight of the host machine on the grapples in the open position.

Complex Hydromechanical Work Tools

Note: For the functionality of Cat Complex Work Tools, please read the Operation and Maintenance Manual for the work tool.

Consult your Cat dealer for replacement manuals. Please read all the safety messages and understand all the safety messages for each work tool.

i07167346

Rubber Belt Track Operation (If Equipped)

SMCS Code: 4198

The rubber part of the track assembly can easily be damaged during operation. Operate the machine with the rubber belt only if damage to the rubber belt is shallow and the damage is not harmful. However, any harmful damage to the rubber can cause the following serious problems to the entire track assembly:

- Early wear of iron core.
- Early wear of track grousers.
- Fracture of iron core.
- Fracture of track grousers.

- Cuts of steel cords
- Rubber flaking off
- Disengagement of sprocket

Such a failed track assembly needs to be replaced as a unit. To minimize the replacement of the track, observe the following items. To maximize the performance of the track, observe the following items:

- Avoid operation under salty conditions.
- Avoid combined operation of travel and turning with excessive load on rough terrain.
- Avoid operation at rocky or demolition sites.
- Use the rubber belt tracks at temperatures within −15 °C (5 °F) to 38 °C (100.4 °F). Avoid operation on hot surfaces.
- If the sprockets are badly worn, use a new sprocket for replacement.
- Be sure that the tracks are free of oily materials such as fuel, hydraulic oil, or grease.
- Avoid going over sharp obstacles. Decreased life of the track, fracture of the track grousers and cut steel cords can occur.
- Track tension must be correctly maintained and checked regularly.
- Disengagement of the track could occur if the track gets clear of the track roller. This condition could occur while the machine travels over an obstacle.

Parking

i07330974

Stopping the Engine

SMCS Code: 1000; 7000

NOTICE
Stopping the engine immediately after it has been working under load can result in overheating and accelerated wear of the engine components. Refer to the following procedure to allow the engine to cool, and to prevent excessive temperatures in the turbocharger housing (if equipped) which could cause oil coking problems.

1. Operate the engine for 5 minutes at low idle with no load.

Note: This operation allows hot areas in the engine to cool gradually. This operation will extend the engine life.

2. Move the joysticks to the NEUTRAL position.
3. Turn the engine start switch key to the OFF position.

i07868120

Stopping the Engine if an Electrical Malfunction Occurs

SMCS Code: 1000; 7000

Inside Cab

NOTICE
Perform a walk around inspection after actuation of a shutdown device.

Take necessary corrective action to resolve the cause of the shutdown.

Ensure that no additional damage has been done or could occur before returning to operation.

Illustration 301 g06355637

The fuse panel is located behind the seat on the right side.

Illustration 302 g06356196

Remove the cover to access the fuse panel.

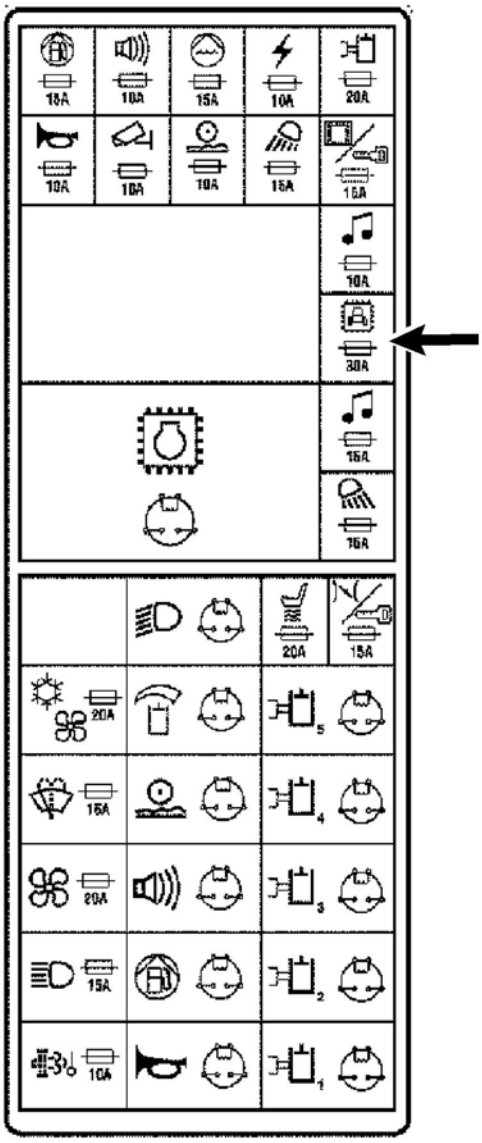

Illustration 303 g06298757

Engine ECM fuse

Remove the Engine ECM fuse to stop the engine.

Note: Do not operate the machine until the malfunction has been corrected.

i07724225

Equipment Lowering with Engine Stopped

SMCS Code: 6700; 7000

WARNING

Personal injury or death can result from a work tool falling.

Keep personnel away from the front of the machine when lowering the work tool.

Before lowering any equipment with the engine stopped, clear the area around the equipment of all personnel. The procedure will vary with the type of equipment that is lowered. Keep in mind that most systems use a high-pressure fluid or air to raise or lower the equipment. The procedure will cause high-pressure air, hydraulic fluid, or some other media to be released to lower the equipment. Wear appropriate personal protective equipment and follow the established procedure in the Operation and Maintenance Manual, “Equipment Lowering with Engine Stopped” in the Operation Section of the manual.

Lowering the Equipment with the Accumulator Charged

If electrical power is available and the accumulator is charged, the loader arms can be lowered from the operator station with the work tool control.

1. Fasten the seat belt. Lower the armrests.
2. If machine security is installed, key in a valid Master Code or Operator Code. See "User Management, Master Code, and Operator Code".
3. Move the engine start switch to the ON position. Press the parking brake switch and release the parking brake switch.

Note: The parking brake indicator will remain illuminated since the engine is not running. When the indicator for the work tool is no longer illuminated, the pressure can be released.

4. Slowly move the work tool control to the LOWER position to slowlylower the loader arms.

If the loader arms do not lower, the accumulator is not charged. It is possible to recharge the accumulator by cranking the engine for 15 seconds. Repeat step 3 and 4.

If there is no electrical power the loader arms must be lowered by using the procedure that is explained next.

Alternate Lowering the Equipment

WARNING

Personal injury can result from oil under high pressure.

DO NOT allow high pressure oil to contact skin.

Wear appropriate protective equipment while working with high pressure oil systems.

The loader arms must be lowered manually if the accumulator is not charged or if there is no electrical power.

Do not go under the raised lift arm without the brace for the loader lift arm in the LOCKED position.

Note: Make sure that there are no people near the front or sides of the machine.

Illustration 304 g06411886

Roof-mounted Finger Latch

The bypass valve (Dead Engine Lower) is located overhead on the underside of the cab roof .

Illustration 305 g01332374

Film molded into the finger latch.

Actuation

1. Pull down on the finger latch. Release the finger latch to stop the loader arms, if necessary.
2. Allow the loader arms to lower until the work tool is on the ground.
3. Release the finger latch.
4. Make the necessary repair before you operate the machine.

i07331337

Leaving the Machine

SMCS Code: 7000

Refer to Operation and Maintenance Manual, “Parking” for details about stopping the engine and lowering the equipment.

i07735116

Machine Storage and Specified Storage Period

SMCS Code: 7000

Machine Storage

The Safety Section of this Operation and Maintenance Manual contains storage information for fuels, lubricants, and ether (if equipped).

The Operation Section of this Operation and Maintenance Manual contains information for short-term storage of this machine, including engine shutdown, parking, and instructions for leaving the machine.

For detailed steps on long-term storage refer to Special Instruction, SEHS9031, “Storage Procedure for Caterpillar Products”.

Specified Storage Period

The specified storage period of this machine is 1 year.

After the specified storage period has expired, consult your Cat dealer for inspect, repair, rebuild, install remanufactured, or install new components, and disposal options, and to establish a new specified storage period.

If a decision is made to remove the machine from service, refer to Decommissioning and Disposal for further information.

Transportation Information

i07331340

Shipping the Machine

SMCS Code: 7000

Investigate the travel route for overpass clearances. Make sure that there will be adequate clearance.

Before you load the machine and before you unload the machine remove ice, snow, or other slippery material from the loading dock and from the trailering surface. Removal of ice, snow, or other slippery material will help prevent the slipping of the machine as you load the machine. Removing ice, snow, or other slippery material will help prevent the machine from moving in transit.

NOTICE

Obey all state and local laws governing the weight, width and length of a load.

Make sure the cooling system has proper antifreeze if moving machine to a colder climate.

Observe all regulations governing wide loads.

Do not use a fork lift to lift the machine. Using a fork lift to move your machine can result in property damage.

Choose the flattest ground when you load the machine or when you unload the machine.

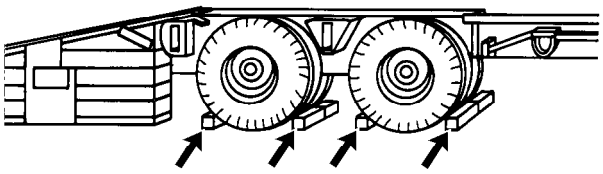

Illustration 306 g00040011

1. Before you load the machine, chock the trailer wheels or the rail car wheels. Before you unload the machine, chock the trailer wheels or the rail car wheels.
2. When you use loading ramps, make sure that the loading ramps have adequate length, adequate width, and adequate strength. In addition, make sure that the surface of the loading ramps is clean. This will help prevent the machine from sliding in all types of weather conditions. This will allow the machine to move on the ramps smoothly.
3. Maintain the slope of the loading ramps within 15 degrees of the ground.
4. Minimize any step between the base of the loading ramps and the ground.
5. Clean the tracks or tires on the machine to prevent any slippage.

Loading the Machine

1. Position the machine so that the heaviest end of the machine is going up the ramps first.
2. Use caution when you travel over the areas around the loading ramp joints. Maintain the balance point of the machine. Keep the work tool low.
3. After you load the machine onto the trailer be sure that the machine is properly positioned on the trailer bed.
4. Lower the work tool to the floor of the transport vehicle.
5. Turn the engine start switch key to the OFF position to stop the engine.
6. Turn the engine start switch key to the ON position. Push the parking brake switch.
7. Move all joystick controls while you are pressing several times on each side of the auxiliary hydraulic control (if equipped) to relieve hydraulic pressure.
8. Move all hydraulic controls to the NEUTRAL position.
9. Turn the engine start switch key to the OFF position. Remove the engine start switch key.
10. Move the armrests to the RAISED position. Unfasten the seat belt.
11. Attach any vandalism protection.
12. Refer to the Operation and Maintenance Manual, “Lifting and Tying Down the Machine” for information on tying down the machine.

13. Cover the exhaust opening when the machine has cooled down.

Unloading the Machine

1. Position the machine so that the machine can drive straight down the loading ramps. Position the machine so that the heaviest end of the machine goes down the ramps last.

2. Use caution when you travel over the areas around the loading ramp joints to maintain the balance point of the machine. Keep the work tool low.

i07376414

Before Roading the Machine

SMCS Code: 7000

Ensure that your machine has a work tool that is approved for roading. Refer to Operation and Maintenance Manual, “Caterpillar Approved Work Tools and Work Tool Attachments” for the approved work tools for roading.

Complete all the following operations that are applicable to your machine before you road the machine.

Rear Lights

1. Verify that all lights are in proper working order.

2. Turn on the roading lights when you are roading the machine.

Headlights

Refer to Operation and Maintenance Manual, “Headlights - Adjust” for the proper procedure to adjust the headlights.

Hydraulic Shutoff

Disable the work tool and auxiliary hydraulic control when you are roading the machine by pressing the Hydraulic Lockout switch. Refer to "Operator Controls, Hydraulic Lockout".

Lift Arm

Where required by local regulations, place the lift arm and the work tool in the roading position and activate ride control if equipped.

1. Enter the machine. Fasten the seat belt. Lower the armrests. Start the engine.

2. Disengage the parking brake.

Illustration 307 g06408213

Type 1: All except 226D3, 232D3, 239D3, and 249D3

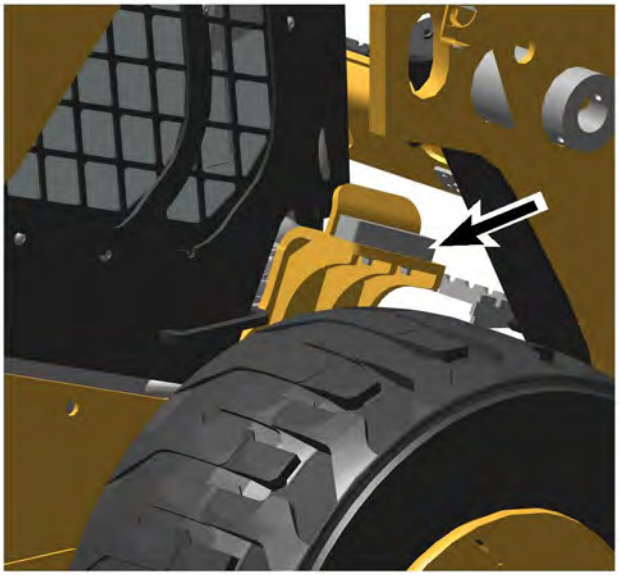

Illustration 308 g06408661

Type 2: 226D3, 232D3, 239D3, and 249D3

3. Raise off the lift arms of the lower stop approximately 30 mm (1.2 inch) for Type 1 models and 180 mm (7.1 inch) for Type 2 models.

4. Stop the engine.

Illustration 309 g06408400

Type 1: All except 226D3, 232D3, 239D3, and 249D3

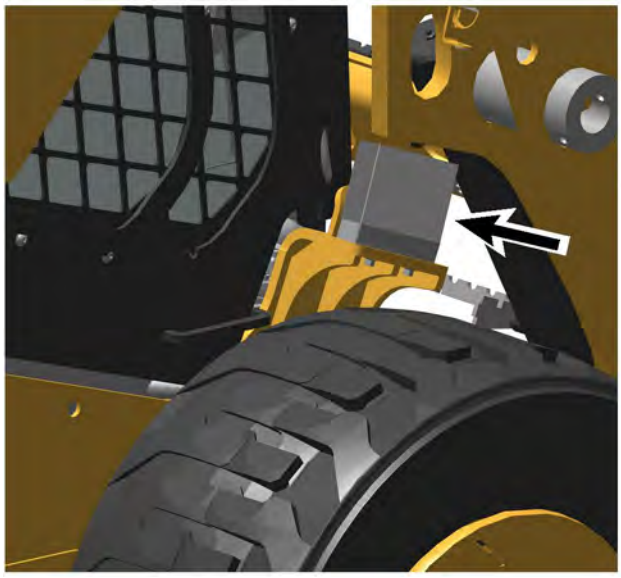

Illustration 310 g06408690

Type 2: 226D3, 232D3, 239D3, and 249D3

5. Insert the block for the lift arms between the frame and the lift arm. For Type 1 models, place the lip of the block over the left-hand lower stop. For Type 2 models, thread the guide plate of the right-hand lower stop through the slot in the block.

6. Start the engine. Disengage the parking brake.

7. Slowly lower the lift arm onto the block.

8. Fully tilt back the coupler. Stop the engine.

9. Raise the armrests. Unfasten the seat belt. Exit the machine.

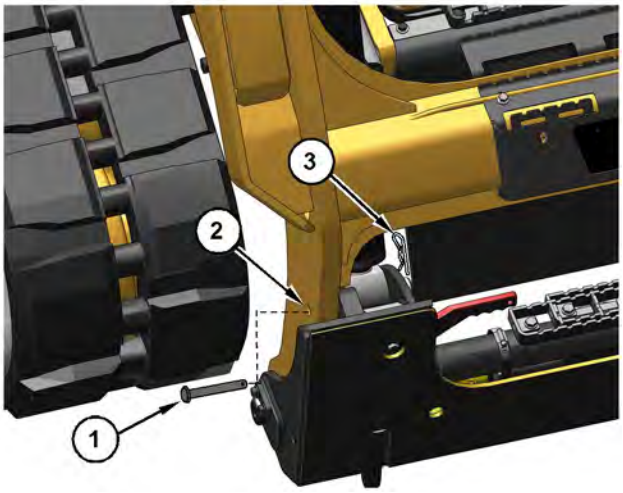

Illustration 311 g06409588

10. Insert the locking pin (1) for the coupler through the tab on the coupler and through the hole (2) in the lift arm.

11. Secure the locking pin (3) for the coupler with a cotter pin.

NOTICE

Do not tilt the coupler forward while the locking pin for the coupler is installed. Damage to the coupler may result.

12. Disable the hydraulics for the linkage while the locking pin for the coupler is installed. Disable the hydraulics for the linkage with the hydraulic lockout switch. Refer to Operation and Maintenance Manual, Operator Controls Hydraulic Lockout.

Mirrors

If necessary, adjust the mirrors.

Rotating Beacon Light

Where required by local regulations, install the rotating beacon light on top of the cab. Insert the plug into the receptacle which is on the right rear of the cab.

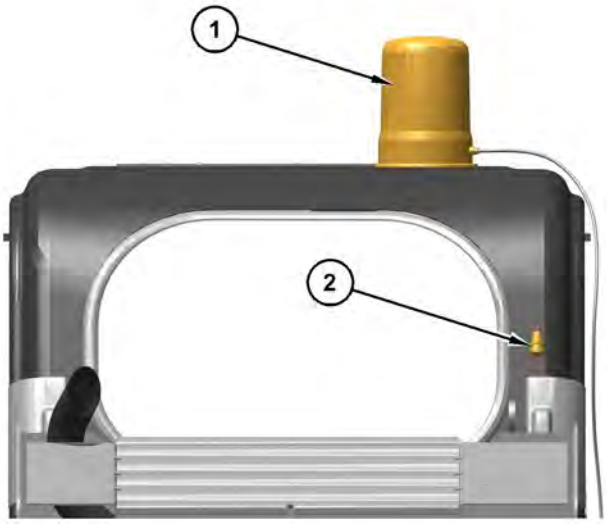

Illustration 312 g06408074

(1) Rotating Beacon Light
(2) Receptacle

Slow Moving Vehicle Sign

Where required by local regulations, install the slow moving vehicle sign on the rear of the machine.

Tires

Ensure that your machine has tires that are approved for roading. Ensure that the tires have the proper pressure. Refer to Operation and Maintenance Manual, “"Tire Inflation - Check"”.

Traffic Regulations

Learn and obey all the traffic regulations when you are roading the machine.

Work Lights

Turn off all work lights.

Prepare the Work Tool

Angle Blade

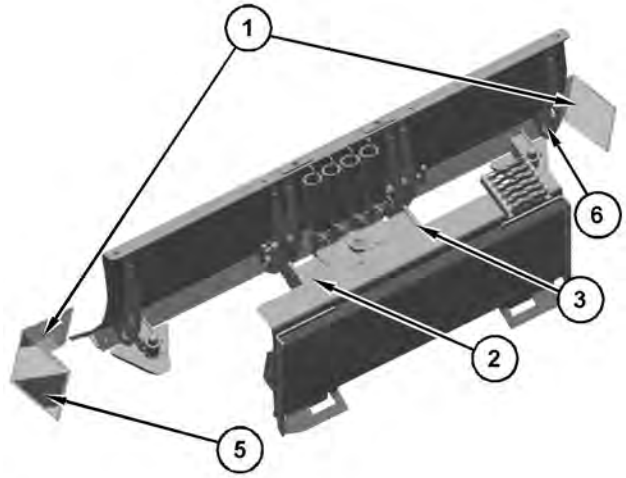

Illustration 313 g06399811

1. Ensure that all roading decals (5) are properly attached to the front and side of each of the guards (1) for the Angle Blade. There are a total of four decals for the Angle Blade.
2. Place the guard (1) on the lower corner of the blade so that the hole in the blade is aligned with the hole in the guard.
3. Install the bolt, two washers and the wing nut (6).
4. Repeat steps 2 and step 3 on the other end of the Angle Blade.
5. Install the articulation lock (2) for the angle blade. Install cotter pin (3) in the end of the articulation lock.

Buckets

The guard for the buckets is used on both simple buckets and hydromechanical buckets.

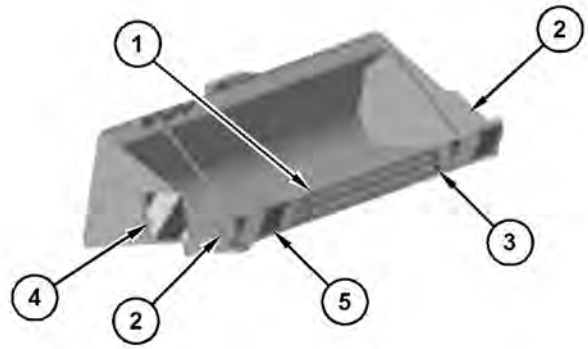

Illustration 314 g06399812

1. Make sure that the two front roading decals (5) are properly attached to the guard (1) for the bucket. Make sure that the side roading decals (4) are properly attached to the guard for the bucket. There are a total of four decals on the guard for the bucket.
2. Loosen the wing nuts (3) and move the guard for the bucket so that the guard fits over the outside edge of the bucket. Tighten the wing nuts.
3. Install the bolts, three washers, plates, and wing nuts (2) on both side plates of the bucket.

Cold Planer

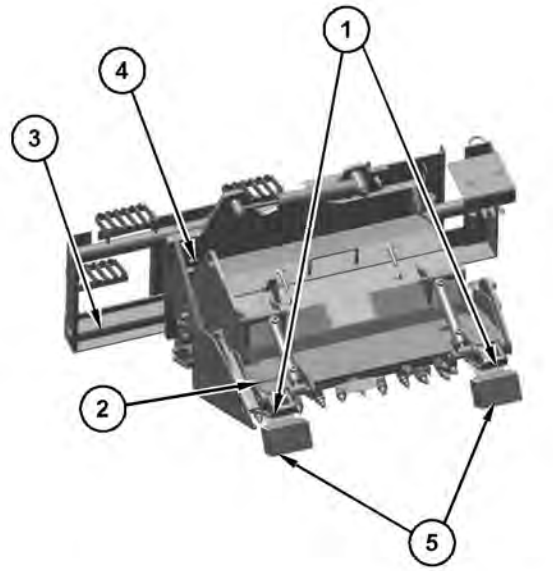

Illustration 315 g06397694

1. Ensure that all roading decals (5) are properly attached to both of the guards (1) for the Cold Planer. There are a total of two decals for the Cold Planer.
2. Place the guards (1) on the front skid pads so that the holes in the guards align with the holes in the Cold Planer. Install the bolts, washers, and nuts (2).
3. Install the side shift lock (3) for the Cold Planer.
4. Install the pivot lock (4) for the Cold Planer.

Landscape Rake

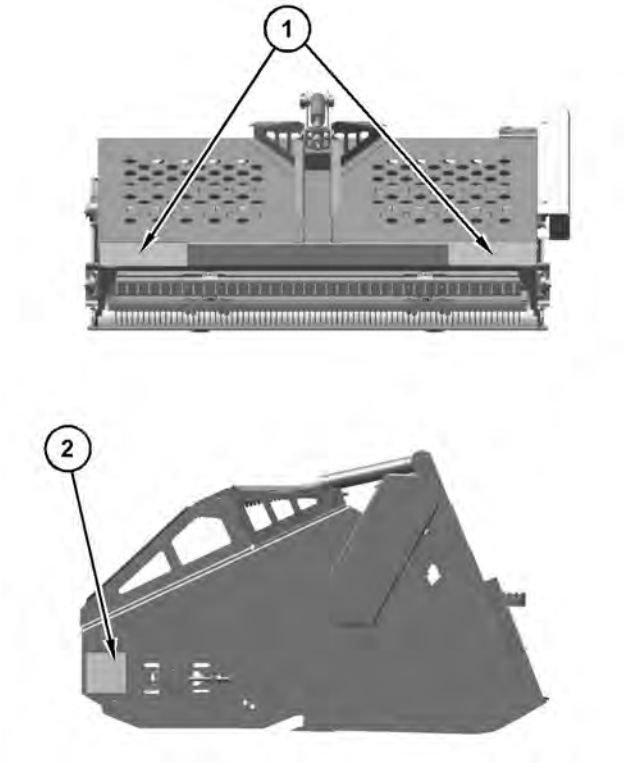

Illustration 316 g06399819

Ensure that the two front decals (1) are attached to the Landscape Rake. Ensure that the two side decals (2) are attached to the Landscape Rake.

Pickup Broom

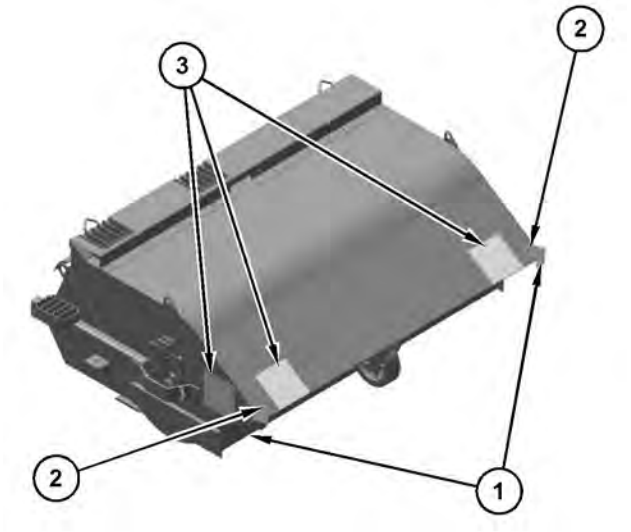

Illustration 317 g06399820

1. Ensure that all roading decals (3) are properly attached to the work tool. There are a total of four decals for the Pickup Broom.
2. Place the guards (1) on the front corners of the broom so that the holes in the guard align with the holes in the broom. Install the bolts and locknuts (2).

Note: The guards for the broom can be permanently installed. The broom can be operated with the guards on the broom.

Vibratory Compactor

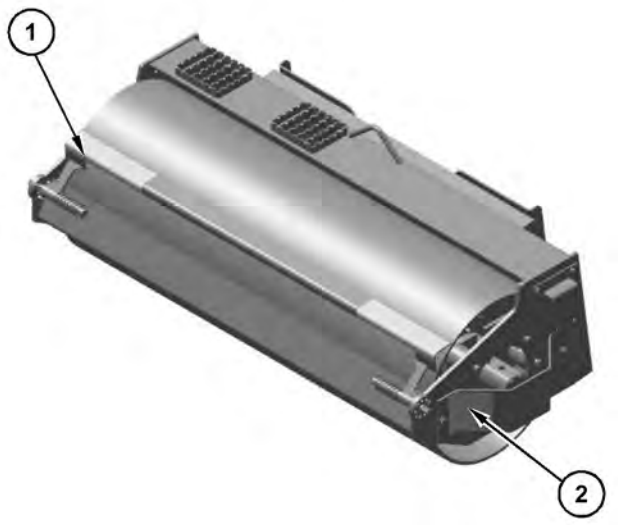

Illustration 318 g06397726

Ensure that the two front decals (1) are attached to the Vibratory Compactor. Make sure that the two side decals (2) are attached to the Vibratory Compactor.

i06598952

After Roading the Machine

SMCS Code: 7000

When you are finished roading, perform the following procedure in order to prepare the machine for work operation.

NOTICE
Do not tilt the coupler forward while the locking pin for the coupler is installed. Damage to the coupler may result.

1. Use the following steps to remove the block for the lift arms:
   a. Enter the machine. Fasten the seat belt. Lower the armrest. Start the engine.
   b. Disengage the parking brake.
   c. Raise the lift arms slightly.
   d. Stop the engine.
   e. Reverse the installation steps to remove the block for the lift arms. Refer to "Before Roading the Machine".
   f. Start the engine. Disengage the parking brake.
   g. Lower the lift arms all the way.
2. Turn off the roading lights.
3. Turn off the engine. Remove the locking pin for the coupler.

Note: In order to remove the locking pin for the coupler, the coupler may need to be tilted back.

4. Remove all guards and locks for the work tools.
5. Remove beacon light

i07331362

Roading the Machine

SMCS Code: 7000

Limitations for TON-kilometers per hour (TON-miles per hour) must be obeyed. Consult your tire dealer for the speed limit of the tires that are used.

Ensure that you have the required licenses and other similar items with you while you road the machine.

Ensure that your machine is equipped to comply with roading regulations.

Learn and obey all traffic regulations when you are roading the machine. Travel at a moderate speed. Observe all speed limitations when you road the machine. Ensure that all work tools remain securely attached to the work tool coupler. Ensure that appropriate locking pins remain in position.

i09553385

Lifting and Tying Down the Machine

SMCS Code: 7000

NOTICE
Improper lifting or tiedowns can allow load to shift and can cause injury and damage.

Lifting the Machine

There are two lifting attachment options available for the machine:

- The single point lifting assembly.
- The four-point lifting group.

Use one of the lifting attachments to lift the machine. Do not attach both lifting devices to the machine at the same time.

For lifting the machine, use properly rated cables and properly rated slings. Position the crane for a level machine lift. Do not drag the machine with a crane.

All work tools must be removed from the machine before the machine is lifted.

Note: Do not exceed the weight limit . This film is on the outside of the right-hand side of the cab.

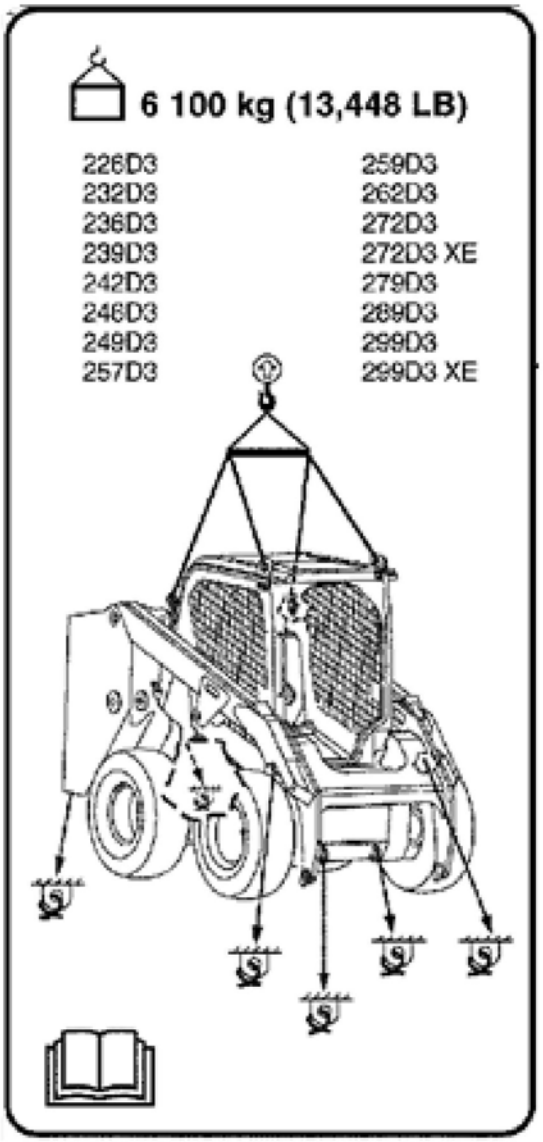

Illustration 319 g07489319

The lifting devices will be mounted on the top of the cab. If any accessory is mounted to the cab roof, the attachment must be removed before lifting the machine.

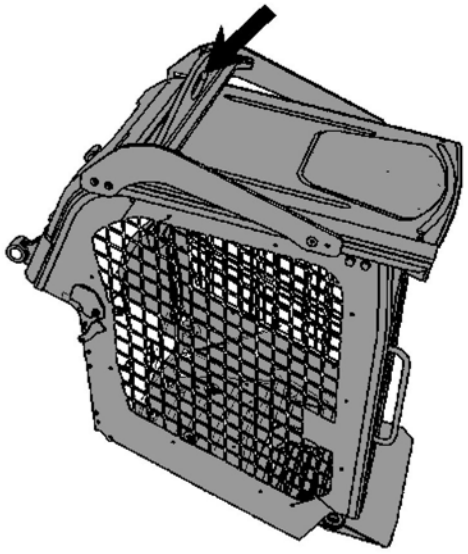

Illustration 320 g06408161

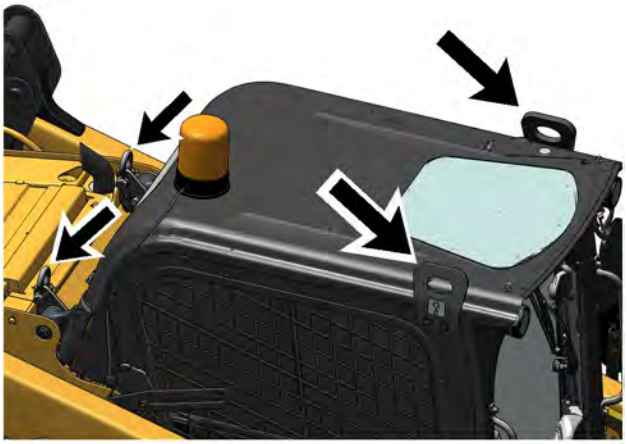

Illustration 321 g06408093

When the four-point lifting group is used, the chain for each leg should be a minimum of 1 m (3.3 ft) in length. Keep the machine level during the lift.

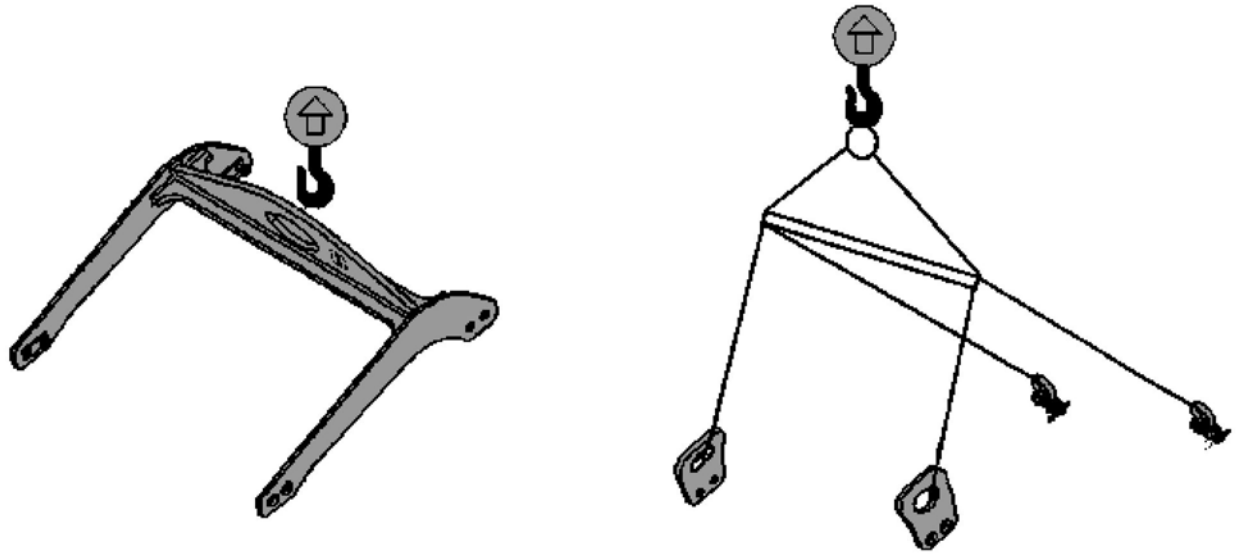

Illustration 322 g06408129

Refer to the Cat Parts Manual for the current part numbers for the lifting devices for your machine. The parts manuals are listed in the Operation and Maintenance Manual, “Reference Information Section”.

Lifting Point – Lifting points are designated by this symbol.

The weight and the instructions that are given describe the machine as manufactured by Caterpillar. Refer to the Operation and Maintenance Manual, “Specifications” for weight information about your machine.

Do not allow any personnel in the area around the machine.

1. Remove the work tool. If necessary, cover any hydraulic lines and quick disconnect coupler on the machine.

2. Lower the lift arms completely.

3. Turn off the machine.

4. Attach the single point lifting device or the four point lifting device to the machine.

5. Use properly rated cables and slings for lifting. The crane should be in a position that the machine is lifted without swinging.

Refer to the table below for the cable capacities and cable orientation limits.

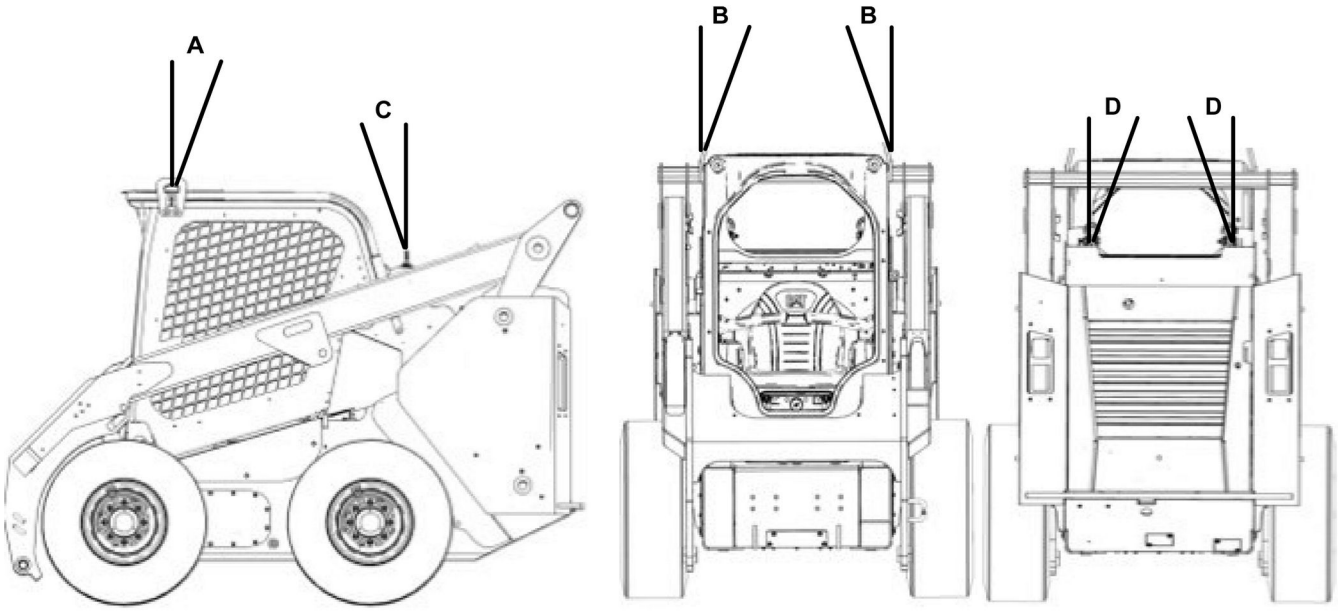

Illustration 323 g07489250

Table 34

D3 Lift Points	
Front Lift Points	
Minimum Breaking Load	44.4 kN (9982 lb)
Maximum Fore/Aft Angle (A)	30 degrees
Maximum Lateral Angle (B)	19 degrees
Rear Lift Points	
Minimum Breaking Load	87.5 kN (19671 lb)
Maximum Fore/Aft Angle (C)	14.4 degrees
Maximum Lateral Angle (D)	11 degrees

Lifting the Grapple Rake

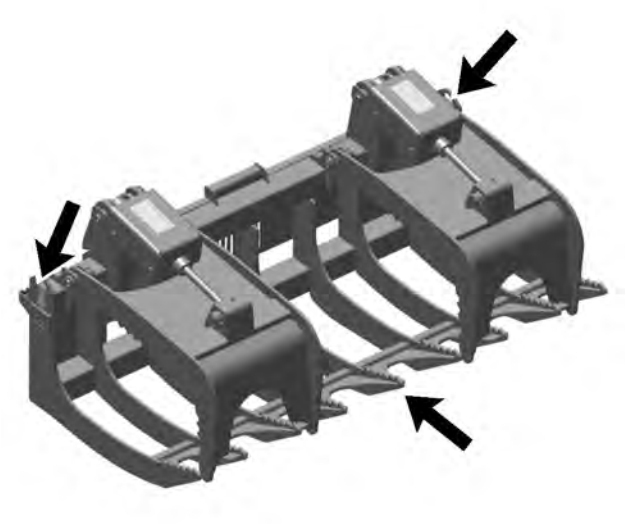

Illustration 324 g06393830

Use properly rated cables and properly rated slings for lifting work tools. Position the crane for a level lift. Do not drag the work tool with a crane.

Note: The approximate weight of the 1829 mm (72 inch) Grapple Rake is 458 kg (1010 lb). The approximate weight of the 2134 mm (84 inch) Grapple Rake is 506 kg (1116 lb).

Use two hooks in the lifting eyes on the frame. Use a sling around the front torque tube at the center rake tine.

Tying Down the Machine

There may be more than one way to tie down the machine. Local regulations should be used to determine the best method. Obey all local and regional governmental regulations.

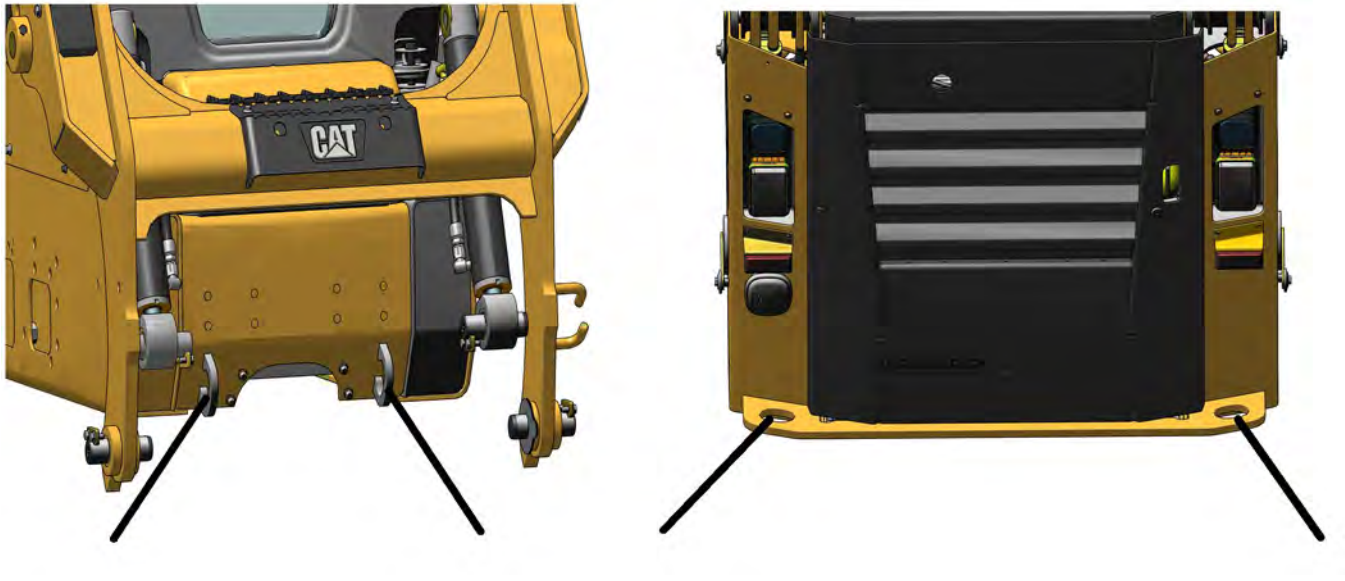

Illustration 325 g06408220

Two eyes are on the front of the machine frame and two eyes are on the rear of the machine frame.

Use the tie-downs shown in illustration 325 .

Note: Use only the specified locations for tying down the machine. Do not use any other locations to tie down the machine.

Install tie-downs at all four locations. Place chocks in front of the machine and behind the machine.

Tie-Down Point – Tie-down points are designated by this symbol.

The weight and the instructions that are given describe the machine as manufactured by Caterpillar. Refer to the Operation and Maintenance Manual, “Specifications” for weight information about your machine.

1. Turn off the machine.

2. Use the properly rated cables and shackles for tying down the machine.

3. Use the front eyes and the rear eyes that are provided on the lower frame of your machine. Use corner protection when necessary.

Note: Where possible, avoid routing cables over tires or tracks. Avoid contact with the work tool to prevent false tension.

Refer to the table below for the cable capacities and cable orientation limits.

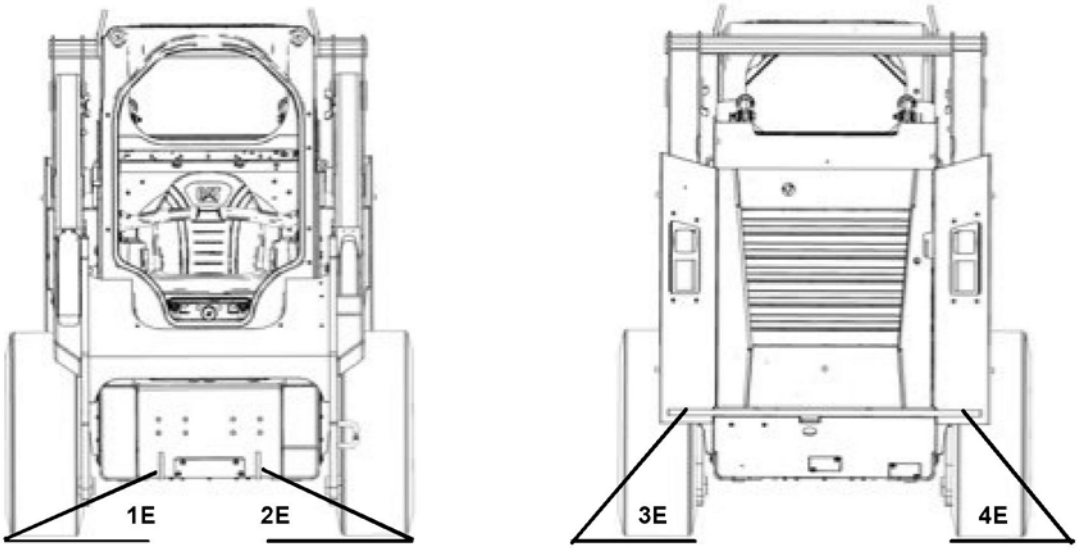

Illustration 326 g07489264

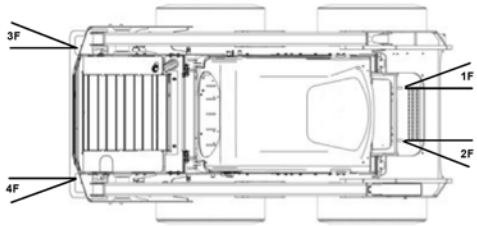

Illustration 327 g07489267

Table 35

246D3 and 262D3 Tie Down Points			
	Minimum Breaking Load	**Horizontal Angle (F) Range Limits**	**Vertical Angle (E) Range Limits**
Tie Down Point (1) & (2)	48.2 kN (10836 lb)	20 degrees - 27 degrees	4 degrees - 7 degrees
Tie Down Point (3) & (4)	34.5 kN (7756 lb)	24 degrees - 39 degrees	14 degrees - 24 degrees

Alternate Method

Illustration 328 g06408224

If the alternate method is used, the cable angles from table 35 above also apply.

Note: If the front two tie-down locations on front of machine are not applicable or desired. Use the alternate tie-down location on each side of the lift arm.

Note: Use only the specified locations for tying down the machine. Do not use any other locations to tie down the machine.

Install tie-downs at four out of the six locations. Place chocks in front of the machine and behind the machine.

Consult your Cat dealer for shipping instructions for your machine.

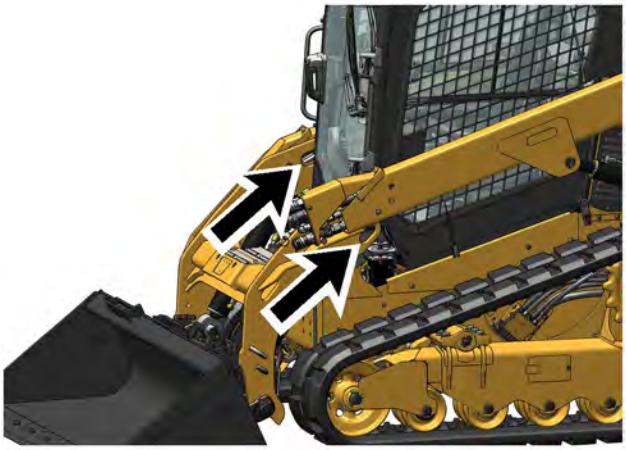

Illustration 329 g06408242

Towing Information

i07716456

Machine Retrieval

SMCS Code: 7000

If the machine is disabled, the machine should be lifted onto a trailer to be transported. Refer to Operation and Maintenance Manual, “Lifting and Tying Down the Machine” for the lifting procedure.

If the machine cannot be lifted, use the following guidelines to retrieve the machine.

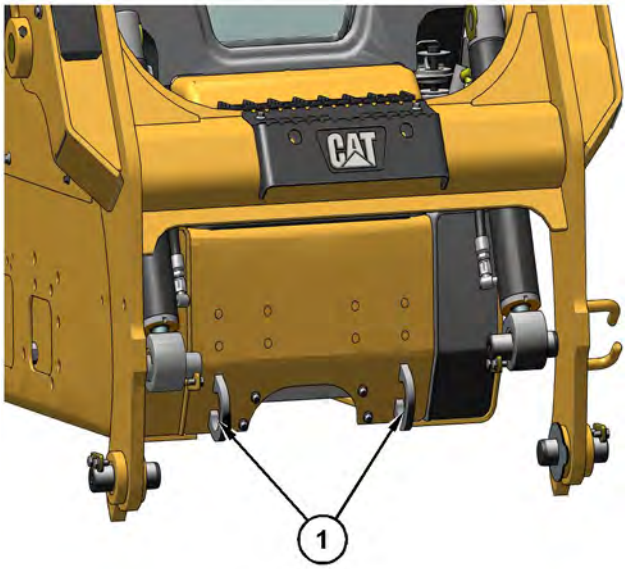

Illustration 330 g06408393

Two retrieval eyes (1) are on the front of the machine.

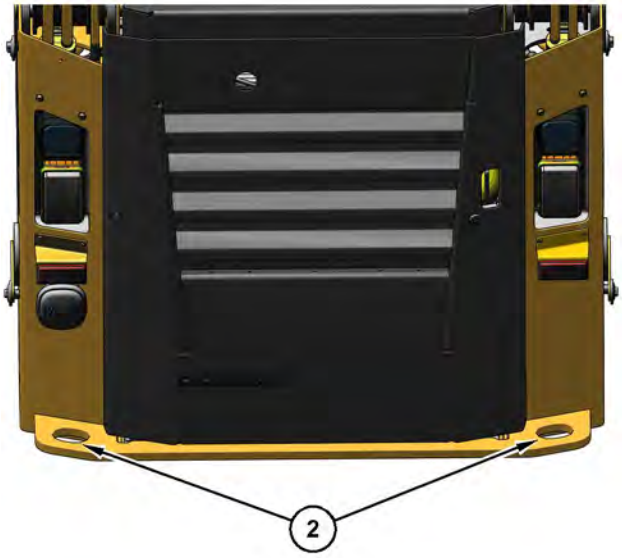

Illustration 331 g06408394

Two retrieval eyes (2) are on the rear of the machine.

- The strength of the line should be at least 1.5 times the gross weight of the machine.
- Provide shielding to protect the operator if the line breaks.
- If a single line is used to pull the machine, then the line must be a minimum of 3 m (10 ft). If two lines are used to pull the machine, then each line must be a minimum of 1.5 m (5.0 ft).
- Do not exceed a maximum pull angle of 20 degrees in any direction.
- Attach the line to the retrieval eyes. Two retrieval eyes (1) are on the front of the machine and two retrieval eyes (2) are on the rear of the machine. Do not attach the line to any other point on the machine.

NOTICE

Do not attach the line to only one retrieval eye when you are retrieving the machine. Use both retrieval eyes. Damage to the machine may occur.

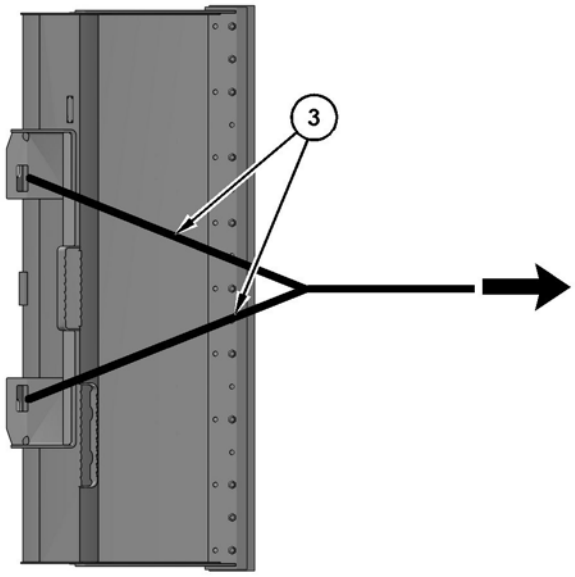

Illustration 332 g06408403

Each of the lines (3) must be a minimum of 1.5 m (5.0 ft).

NOTICE

Do not drag the machine for long distances. Damage to the tracks or the tires may occur.

Engine Starting (Alternate Methods)

i07549373

Engine Starting with Jump Start Cables

SMCS Code: 1000; 1401; 7000

WARNING

Batteries give off flammable fumes that can explode resulting in personal injury.

Prevent sparks near the batteries. They could cause vapors to explode. Do not allow the jump start cable ends to contact each other or the machine.

Do not smoke when checking battery electrolyte levels.

Electrolyte is an acid and can cause personal injury if it contacts skin or eyes.

Always wear eye protection when starting a machine with jump start cables.

Improper jump start procedures can cause an explosion resulting in personal injury.

Always connect the positive (+) to positive (+) and the negative (−) to negative (−).

Jump start only with an energy source with the same voltage as the stalled machine.

Turn off all lights and accessories on the stalled machine. Otherwise, they will operate when the energy source is connected.

NOTICE

To prevent damage to engine bearings and to electrical circuits when you jump start a machine, do not allow the stalled machine to touch the machine that is used as the electrical source.

Severely discharged maintenance free batteries do not fully recharge from the alternator after jump starting. The batteries must be charged to proper voltage with a battery charger. Many batteries thought to be unusable are still rechargeable.

Use only equal voltage for starting. Check the battery and starter voltage rating of your machine. Use only the same voltage for jump starting. Use of a welder or higher voltage damages the electrical system. This machine has a 12 volt starting system. Use only the same voltage for jump starting.

Refer to Special Instruction, SEHS7633, “Battery Test Procedure” available from your Caterpillar dealer, for complete testing and charging information.

1. Engage the parking brake. Lower the work tools to the ground.

Reference: Refer to Operation and Maintenance Manual, “Equipment Lowering with Engine Stopped”.

2. Move all hydraulic controls to the NEUTRAL position.
3. Turn the engine start switch key to the OFF position and turn all accessory switches to the OFF position. Set the engine speed control knob to the low idle position.
4. Move the machine that is being used as an electrical source near the stalled machine so that the jump-start cables reach the stalled machine. **Do not allow the machines to contact each other.**
5. Stop the engine of the machine that is being used as an electrical source. If you are using an auxiliary power source, turn off the charging system.
6. Ensure that the battery in the stalled machine is not frozen.

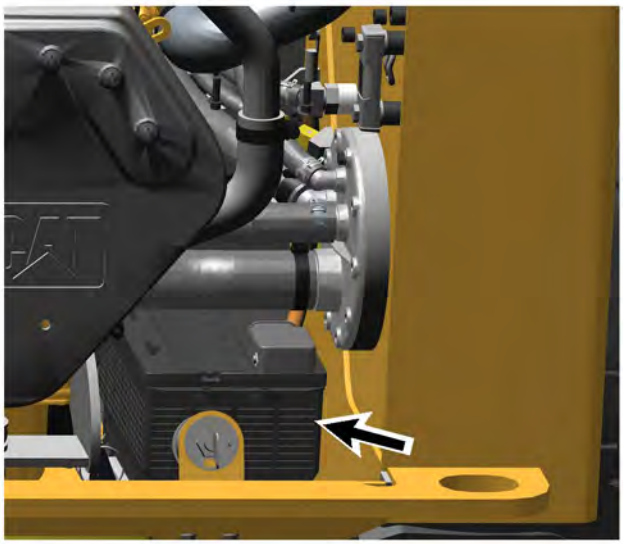

Illustration 333 g06356557
C2.2 Battery Location

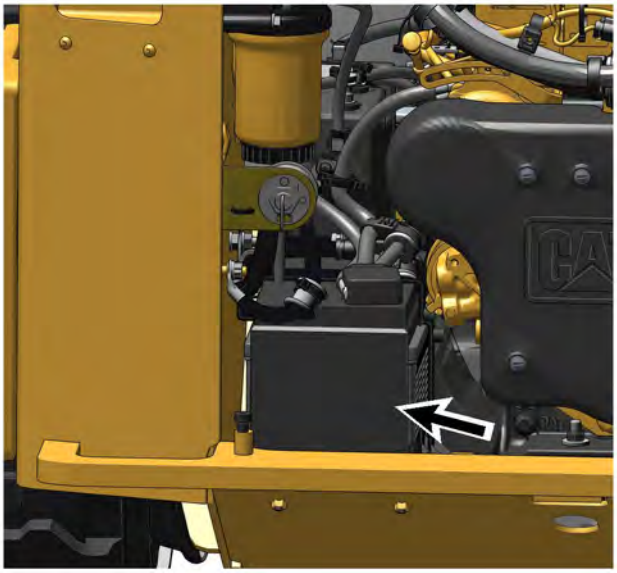

Illustration 334 g06356577
C3.3B Battery Location

Illustration 335 g06356583
C3.8 Battery Location

7. Connect the positive jump-start cable to the positive terminal on the battery of the stalled machine.

   Do not allow the positive cable clamps to contact any metal except for the terminals.

8. Connect the other positive end of the jump-start cable to the positive cable terminal of the electrical source.

9. Connect one negative end of the jump-start cable to the negative cable terminal of the electrical source.

Illustration 336 g06356610

10. Connect the other negative end of the jump-start cable to the lifting eye on the engine of the stalled machine. **Do not connect the jump-start cable to the battery post. Do not allow the jump-start cables to contact the battery cables, the fuel lines, the hydraulic lines, or any moving parts.**

11. Start the engine of the machine that is being used as an electrical source or energize the charging system on the auxiliary power source.

12. Wait at least 2 minutes before you attempt to start the stalled machine. The battery in the stalled machine will partially charge.

13. Attempt to start the stalled engine.

Reference: For the correct starting procedure, refer to Operation and Maintenance Manual, “Engine Starting”.

14. After the stalled engine starts, disconnect the negative jump-start cable from the stalled machine.

15. Disconnect the negative jump-start cable from the negative terminal of the electrical source.

16. Disconnect the positive jump-start cable from the positive terminal of the electrical source.

17. Disconnect the positive jump-start cable from the positive terminal of the stalled machine.

Maintenance Section

Maintenance Access

i07716943

Access Doors and Covers

SMCS Code: 7273-573; 7273-572

Engine Access Door

Note: A pinch point exists between the top of the engine access door and the radiator guard. Keep hands away from this area when you close the engine access door.

The engine access door is located on the back of the machine.

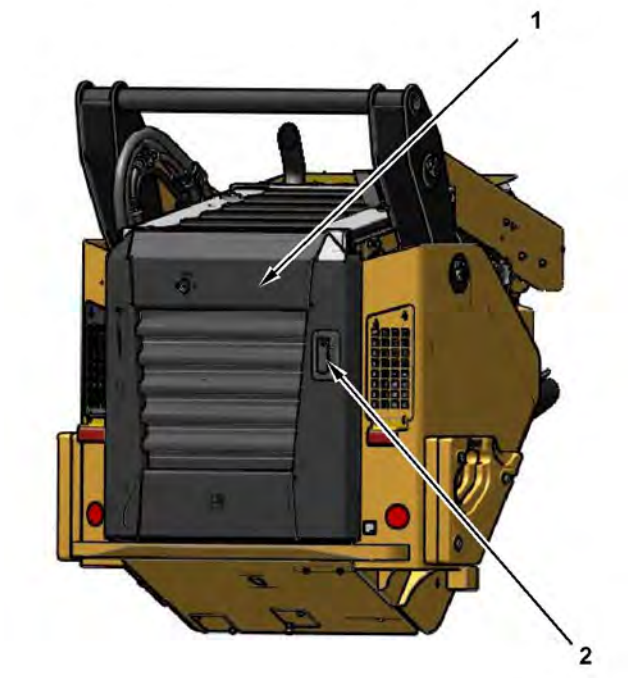

Illustration 337 g06408722

(1) Engine Access Door
(2) Release Lever Access

1. Pull the release lever to open the engine access door.

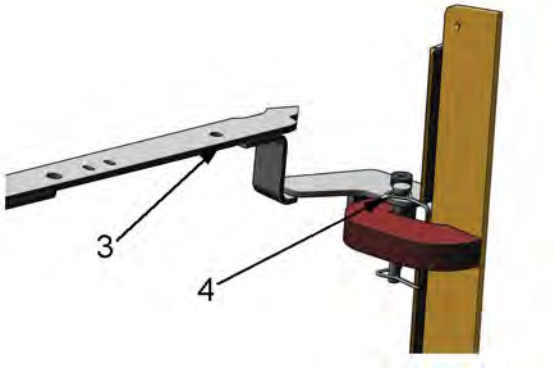

Illustration 338 g06408720

2. Move the retaining pin from the stored position (3) and put the retaining pin in the LOCKED position (4). The engine access door is locked in the open position.
3. In order to close the engine access door, put the retaining pin in the STORED position.
4. Close the engine access door. Ensure that the latch is engaged.

i07716493

Cab Tilting

SMCS Code: 7301-509; 7301-506

WARNING

Do not go beneath cab unless cab is empty and support lever is engaged.

Failure to follow the instructions or heed the warnings could result in injury or death.

WARNING

Do not tilt the cab using an open door. The door must be closed and latched when lifting the cab. The door may become dislodged from its hinges and may cause serious personal injury or death.

Tilting the Cab Upward

1. Park the machine on level ground.

Note: Empty the roof-mounted water tank (if equipped) before you tilt the cab.

Note: If the machine is equipped with the optional HVAC breather kit, disconnect the ductwork between the cab snorkel, and fresh air filter cover before tilting the cab upward.

2. Lower the loader arms fully. If you tilt the cab upward with the loader lift arms in the RAISED position, engage the brace for the loader lift arms. See Operation and Maintenance Manual, “Loader Lift Arm Brace Operation” for the process for engaging the brace for the loader lift arms.

3. Turn the engine start switch key to the OFF position.

4. Remove the two front bolts for the ROPS. There is one bolt on each side of the cab under the lift arms.

5. Close the cab door and ensure that the door is latched.

6. Tilt the cab upward. Stand on the ground when you tilt the cab.

Note: More than one person may be needed to tilt the cab.

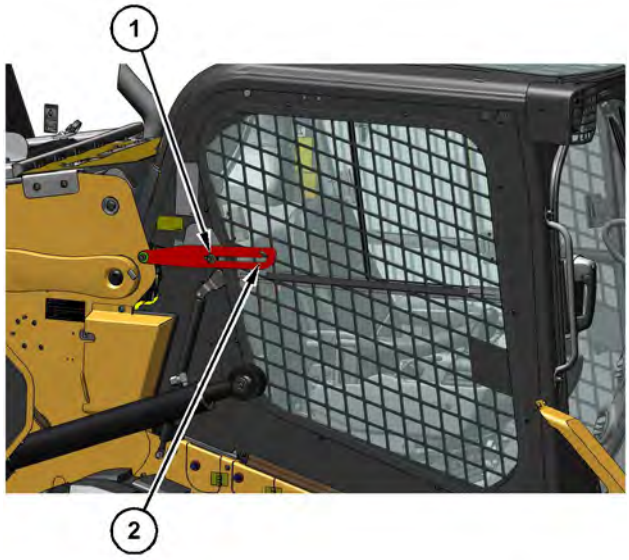

Illustration 339 g06408416

Cab support lever. For clarity the lift arm is not shown.

(1) Unlocked
(2) Locked

Illustration 340 g06408420

7. The cab support lever is on the right side of the machine. As the cab raises, the locking lever will slide into the LOCKED position. Ensure that the cab support lever is in the LOCKED position.

Tilting the Cab Downward

Note: More than one person may be needed to tilt the cab.

1. Ensure that no person is under the cab. Remove all the tools and unsecured items that are underneath the cab.

2. Tilt the cab upward. Move the cab support lever to the UNLOCKED position.

3. Tilt the cab downward.

4. Install the bolts for the ROPS. Torque the bolts to 125 ± 10 N·m (92 ± 7 lb ft).

Note: If the machine is equipped with the optional HVAC breather kit, reconnect the ductwork between the cab snorkel and fresh air filter cover.

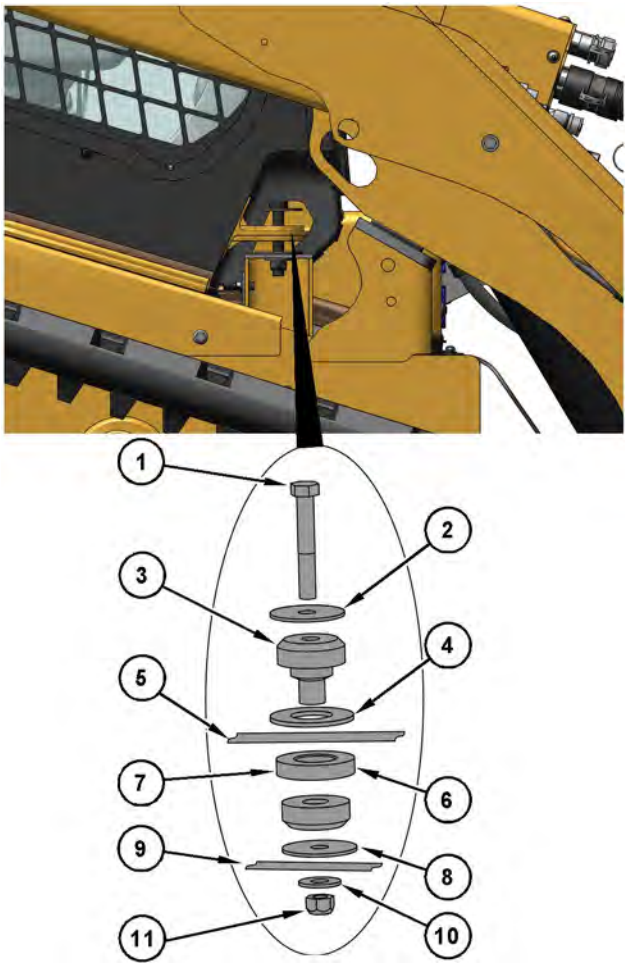

Illustration 341 g06408696

Type 1 Cab Mount

(1) Bolt
(2) Washer
(3) Rubber mount - top half
(4) Washer
(5) ROPS structure
(6) Spacer
(7) Rubber mount - bottom half
(8) Washer
(9) Frame
(10) Spacer
(11) Locknut

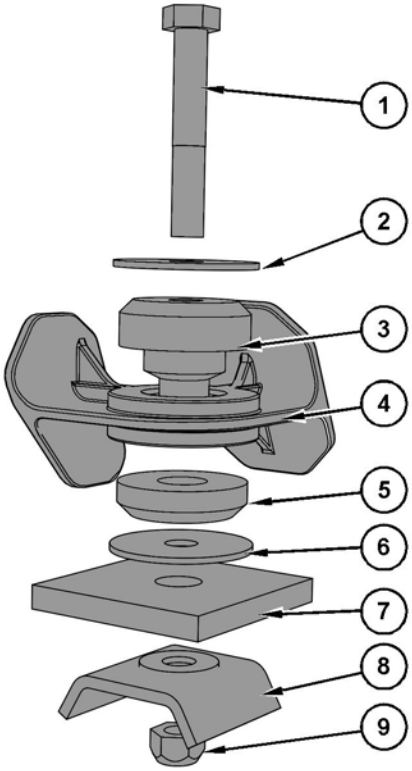

Illustration 342 g06408440

Type 2 Cab Mount

(1) Bolt
(2) Washer
(3) Rubber Mount - Top Half
(4) ROPS Structure
(5) Rubber Mount - Bottom Half
(6) Washer
(7) Frame
(8) Spacer
(9) Locknut

i07717388

Loader Lift Arm Brace Operation

SMCS Code: 6119-011-AB; 6119-012-AB

WARNING

Loader lift arm brace must be in place when working under raised lift arms.

Failure to follow the instructions or heed the warnings could result in injury or death.

Engage the Lift Arm Brace

1. Empty the work tool. Remove the work tool. Park the machine on level ground. Lower lift arms to the ground.

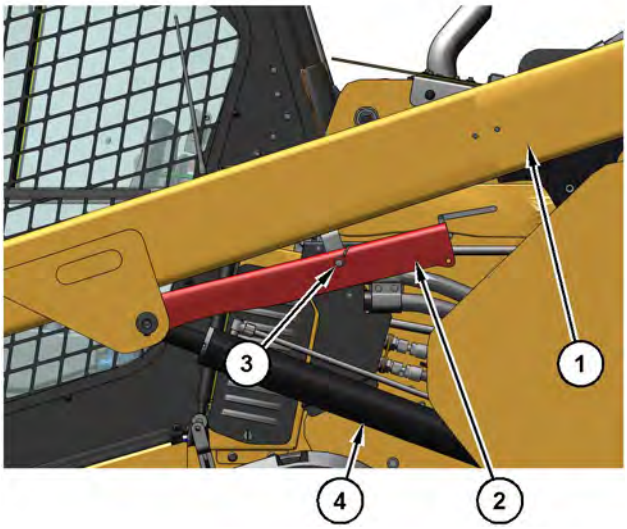

Illustration 343 g06409297

(1) Lift arm
(2) Lift arm brace
(3) Retaining pin
(4) Lift cylinder

2. Stop the engine and exit the machine.

3. Remove arm brace retaining pin and lower brace down to lift cylinder.

4. Enter the machine, fasten the seat belt, and lower the armrests. Start the engine.

5. Release parking brake. Raise the lift arms slowly until the lift arm brace just drops down to the lift cylinder rod.

6. Lower the lift arms against the brace.

7. Stop the engine and exit the machine.

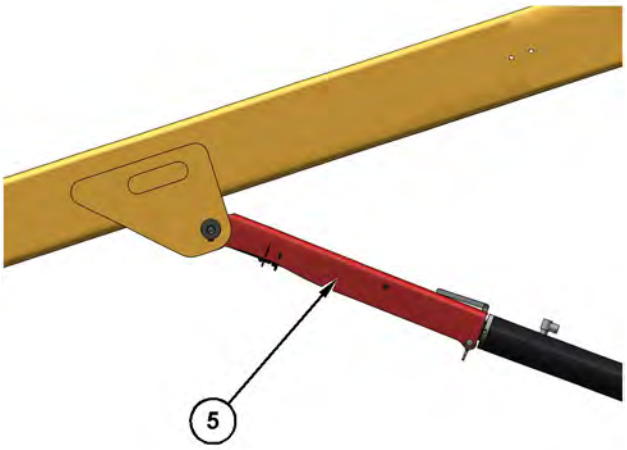

Illustration 344 g06409345

(5) Lift arm brace in the locked position

8. Secure the brace with the retaining pin.

Disengage the Lift Arm Brace

1. Remove the retaining pin.

2. Rotate the brace lift pin onto the cylinder.

3. Enter the machine. Fasten the seat belt. Lower the armrests.

4. Start the engine.

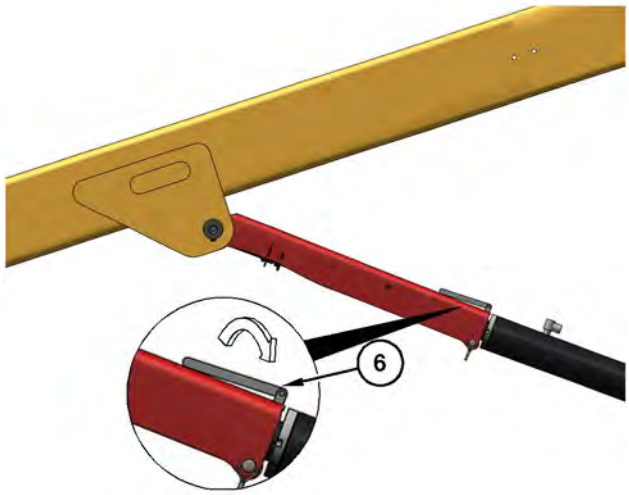

Illustration 345 g06409360

5. Slowly raise the lift arms until the brace lift pin (6) drops into position on the cylinder rod.
6. Slowly lower the lift arms. Ensure that the lift pin (6) lifts the arm brace over the cylinder.
7. Slowly lower the lift arms to the ground.
8. Stop the engine and exit the machine.
9. Secure the brace in the storage position with the retaining pin.

i07376576

Radiator Tilting

SMCS Code: 1353-506; 1353-509

Note: All models except for 226D3, 232D3, 239D3, and 249D3.

1. Open the engine access door. Refer to Operation and Maintenance Manual, “Access Doors and Covers”.

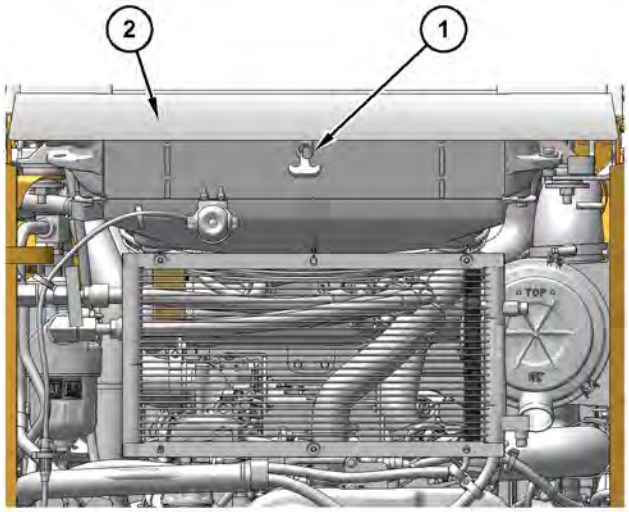

Illustration 346 g06409405

(1) Latch
(2) Radiator guard

2. The release latch for the guard is on the rear of the radiator. Pull the rubber T-handle down to release the guard. Tilt the guard upward.

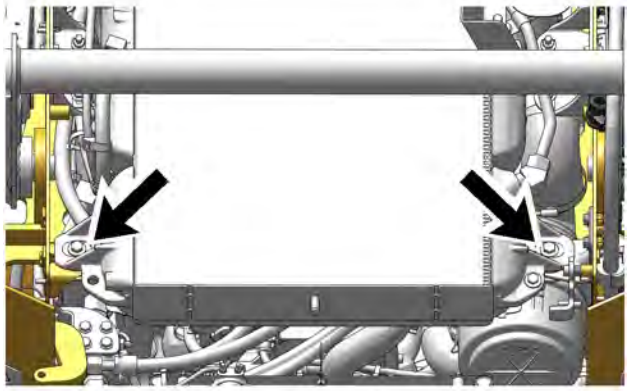

Illustration 347 g06409411

3. To raise the radiator, remove the two bolts.

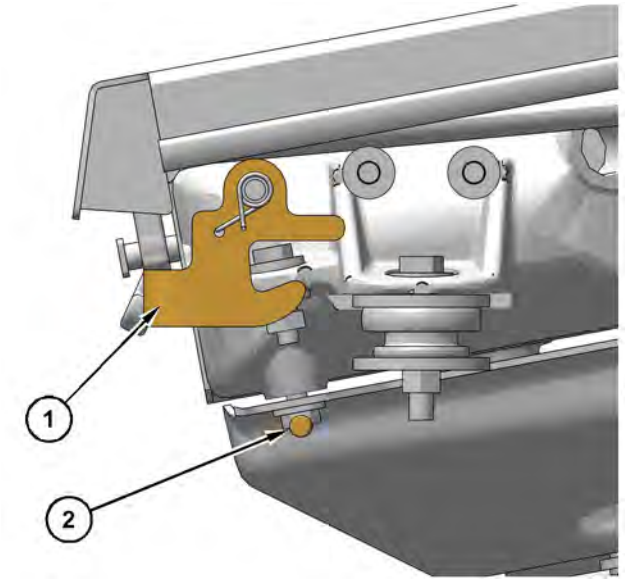

Illustration 348 g06409413

4. Raise the radiator. As the radiator raises, the latch will move (1).
5. Raise the radiator until the latch moves over the catch pin (2).
6. To lower the radiator downward, push up on the radiator. Move the latch to unlatch the lock. Lower the radiator.
7. Install the two bolts to secure the radiator.
8. To lower the radiator guard, move the support rod to the storage position and lower the guard.
9. Fasten the rubber T-handle latch.
10. Close the engine access door.

Alternate Release Latch Location

Note: Only for 226D3, 232D3, 239D3, and 249D3.

1. Open the engine access door. Refer to Operation and Maintenance Manual, “Access Doors and Covers”.

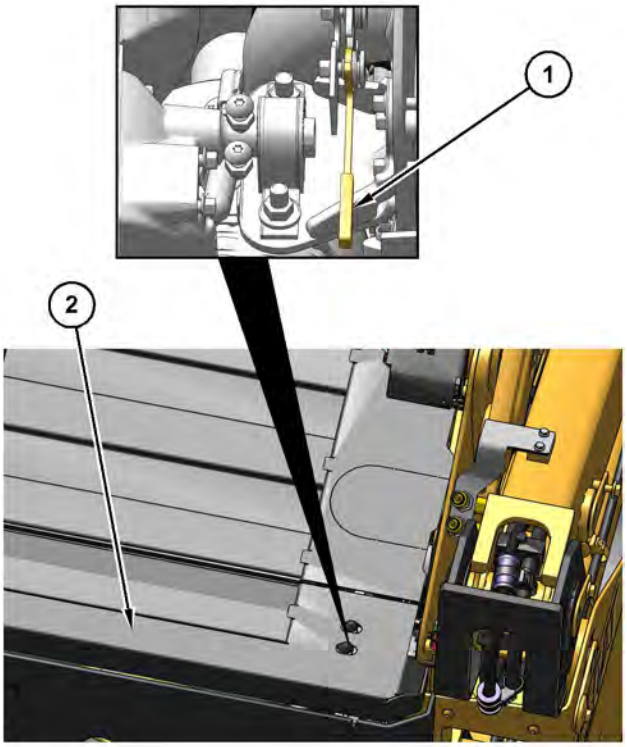

Illustration 349 g06409426

(1) Release Latch (Both Sides)
(2) Radiator Guard

2. Release latches for the guard are on either side of the radiator near the rear of the radiator. Press both release latches upwards simultaneously and tilt the guard upwards.

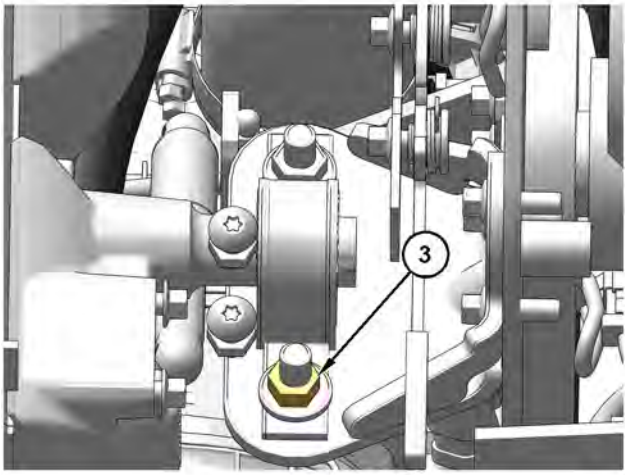

Illustration 350 g06409432

3. To raise the radiator, remove the two nuts (3) from the radiator mount on each side.

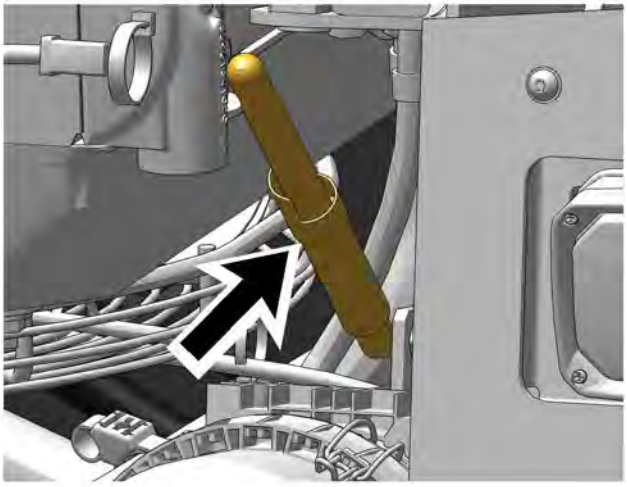

Illustration 351 g06409435

4. The strut lock is on the right side of the engine compartment. Make sure that the strut lock is in the LOCKED position with the radiator tilted up.

5. To lower the radiator downward, lift slightly on the radiator and push the strut lock to the left and lower the radiator carefully.

6. Install the two nuts to the radiator mount on each side.

7. Tilt the guard downward until both the release latches lock onto the catch pins.

8. Close the engine access door.

Lubricant Viscosities and Refill Capacities

i08466263

Lubricant Viscosities
(Fluids Recommendations)

SMCS Code: 7581

General Information for Lubricants

When you are operating the machine in temperatures below −20°C (−4°F), refer to Special Publication, SEBU5898, “Cold-Weather Recommendations”. This publication is available from your Cat dealer.

For cold-weather applications where transmission oil SAE 0W-20 is recommended, Cat Cold-Weather TDTO is recommended.

Refer to the “Lubricant Information” section in the latest revision of the Special Publication, SEBU6250, “Caterpillar Machine Fluids Recommendations” for a list of Cat engine oils and for detailed information. This manual may be found on the Web at Safety.Cat.com.

The footnotes are a key part of the tables. Read ALL footnotes that pertain to the machine compartment in question.

Selecting the Viscosity

To select the proper oil for each machine compartment, refer to the “Lubricant Viscosity for Ambient Temperature” table. Use the oil type AND oil viscosity for the specific compartment at the proper ambient temperature.

The proper oil viscosity grade is determined by the minimum ambient temperature (the air in the immediate vicinity of the machine). Measure the temperature when the machine is started and while the machine is operated. To determine the proper oil viscosity grade, refer to the “Min” column in the table. This information reflects the coldest ambient temperature condition for starting a cold machine and for operating a cold machine. Refer to the “Max” column in the table for operating the machine at the highest temperature that is anticipated. Unless specified otherwise in the “Lubricant Viscosities for Ambient Temperatures” tables, use the highest oil viscosity that is allowed for the ambient temperature.

Machines that are operated continuously should use oils that have the higher oil viscosity in the final drives and in the differentials. The oils that have the higher oil viscosity will maintain the highest possible oil film thickness. Refer to “General Information for Lubricants” article, “Lubricant Viscosities” tables, and any associated footnotes. Consult your Cat dealer if additional information is needed.

NOTICE
Not following the recommendations found in this manual can lead to reduced performance and compartment failure.

Engine Oil

Cat oils have been developed and tested to provide the full performance and life that has been designed and built into Cat engines.

Cat DEO-ULS or oils that meet the Cat ECF-3 specification and the API CJ-4 are required for use in the applications listed below. Cat DEO-ULS and oils meeting Cat ECF-3 specification and the API CJ-4 and ACEA E9 oil categories have been developed with limited sulfated ash, phosphorus, and sulfur. These chemical limits are designed to maintain the expected aftertreatment devices life, performance, and service interval. If oils meeting the Cat ECF-3 specification and the API CJ-4 specifications are not available, oils meeting ACEA E9 may be used. ACEA E9 oils meet the chemical limits designed to maintain aftertreatment device life. ACEA E9 oils are validated using some but not all ECF-3 and API CJ-4 standard engine performance tests. Consult your oil supplier when considering use of an oil that is not Cat ECF-3 or API CJ-4 qualified.

Failure to meet the listed requirements will damage aftertreatment - equipped engines and can negatively impact the performance of the aftertreatment devices. The Diesel Particulate Filter (DPF) will plug sooner and require more frequent DPF ash service intervals.

Typical aftertreatment systems include the following:

- Diesel Particulate Filters (DPF)
- Diesel Oxidation Catalysts (DOC)

Other systems may apply.

Note: For territories where high sulfur diesel fuel is available and allowed by law, these engines will not have aftertreatment. For the areas that have diesel fuel sulfur levels greater than .2% (2,000 ppm), refer to Special Publications, SEBU6250, “Caterpillar Machine Fluids Recommendations” “Total Base Number (TBN) and Fuel Sulfur Levels for Direct Injection (DI) Diesel Engines” for recommendations.

Table 36

Lubricant Viscosities for Ambient Temperatures						
Compartment or System	Oil Type and Performance Requirements	Oil Viscosities	°C		°F	
			Min	Max	Min	Max
Engine Crankcase	Cat DEO-ULS Cold Weather	SAE 0W-40	−40	40	−40	104
	Cat DEO-ULS	SAE 10W-30	−18	40	0	104
		SAE 15W-40	−9.5	50	15	122

Note: For engines with NO aftertreatment, Cat DEO can also be used. Refer to Special Publications, SEBU6250, “Caterpillar Machine Fluids Recommendations” “Cat Diesel Engine Oils Recommendations”.

Hydraulic Systems

Refer to the “Lubricant Information” section in the latest revision of the Special Publication, SEBU6250, “Caterpillar Machine Fluids Recommendations” for detailed information. This manual may be found on the Web at Safety.Cat.com.

The following are the preferred oils for use in most Cat machine hydraulic systems:

- Cat HYDO Advanced 10 SAE 10W
- Cat HYDO Advanced 30 SAE 30W
- Cat BIO HYDO Advanced

Cat HYDO Advanced fluids have a 50% increase in the standard oil drain interval for machine hydraulic systems (3000 hours versus 2000 hours) over second and third choice oils when you follow the maintenance interval schedule for oil filter changes and for oil sampling that is stated in the Operation and Maintenance Manual for your particular machine. 6000-hour oil drain intervals are possible when using S·O·S Services oil analysis. Consult your Cat dealer for details. When switching to Cat HYDO Advanced fluids, cross contamination with the previous oil should be kept to less than 10%.

Second choice oils are listed below.

- Cat MTO
- Cat DEO
- Cat DEO-ULS
- Cat TDTO
- Cat TDTO Cold Weather
- Cat TDTO-TMS
- Cat DEO-ULS Cold Weather

Table 37

Lubricant Viscosities for Ambient Temperatures						
Compartment or System	**Oil Type and Performance Requirements**	**Oil Viscosities**	**°C**		**°F**	
			Min	**Max**	**Min**	**Max**
Hydraulic System	**Cat HYDO Advanced 10** Cat TDTO	SAE 10W	−20	40	−4	104
	Cat HYDO Advanced 30 Cat TDTO	SAE 30	0	50	32	122
	Cat BIO HYDO Advanced	“ISO 46” Multi-Grade	−30	45	−22	113
	Cat MTO Cat DEO-ULS Cat DEO	SAE10W-30	−20	40	−4	104
	Cat DEO-ULS Cat DEO	SAE15W-40	−15	50	5	122
	Cat TDTO-TMS	Multi-Grade	−15	50	5	122
	Cat DEO-ULS Cold Weather	SAE0W-40	−40	40	−40	104
	Cat TDTO Cold Weather	SAE 0W-20	−40	40	−40	104

Drive Train Components

Refer to the “Lubricant Information” section in the latest revision of the Special Publication, SEBU6250, “Caterpillar Machine Fluids Recommendations” for detailed information. This manual may be found on the Web at Safety.Cat.com.

When you are operating the machine in temperatures below −20°C (−4°F), refer to Special Publication, SEBU5898, “Cold-Weather Recommendations”. This publication is available from your Cat dealer.

Table 38

Drive Train Components						
Compartment or System	**Oil Type and Performance Requirements**	**Oil Viscosities**	**°C**		**°F**	
			Min	**Max**	**Min**	**Max**
MTL Track Idlers and Track Rollers **SSL Drive Chain Case**	**Cat DEO-ULS Cold Weather**	SAE 0W-40	−40	40	−40	104
	Cat DEO-ULS	SAE 10W-30	–18	40	0	104
	Cat DEO	SAE 15W-40	−9.5	50	15	122
CTL Track Idlers and Track Rollers	**Extreme Pressure GO**	ISO 220(1)	−40	50	−40	122
	Cat GO	SAE 80W90	−40	50	−40	122
MTL/CTL Final Drive	**Cat Synthetic GO** (1) (2)	SAE 75W-140	-30	45	-22	113
Steel Track Idlers and Steel Track Rollers	**Cat Deo** **EMA LRG-1** **API CH-4** **API CG-4** **API CF-4** **API CF**	SAE 30	-20	25	-4	77
		SAE 40	-10	40	14	104
		SAE 5W40	-35	40	-31	104

(continued)

(Table 38, contd)

Drive Train Components						
Compartment or System	Oil Type and Performance Requirements	Oil Viscosities	°C		°F	
			Min	Max	Min	Max
Track Pins	Cat GO API GL-5	SAE 75W90	-30	40	-22	104
		SAE 80W90	-20	40	-4	104
		SAE 85W140	-10	50	14	122
		SAE 90	0	40	32	104

(1) Cat Synthetic GO is the preferred oil for the final drive. If Cat Synthetic GO is not available, Cat GO, or API GL-5 grade oil may be substituted
(2) Cat GO (Gear Oil) is available in SAE 80W-90 and SAE 85W-140 viscosity grades

Special Lubricants

Grease

To use a non-Cat grease, the supplier must certify that the lubricant is compatible with Cat grease.

Each pin joint should be flushed with the new grease. Ensure that all old grease is removed. Failure to meet this requirement may lead to failure of a pin joint.

Table 39

Recommended Grease						
Compartment or System	Grease Type	NLGI Grade	°C		°F	
			Min	Max	Min	Max
External Lubrication Points	Cat Prime Application	NLGI Grade 2	−20	40	−4	104
	Cat Extreme Application	NLGI Grade 2	−30	50	−22	122
		NLGI Grade 1	−35	40	−31	104
		NLGI Grade 0	−40	35	−40	95
	Cat Extreme Application-Arctic	NLGI Grade 0	−50	20	−58	68
	Cat Extreme Application-Desert	NLGI Grade 2	−20	60	−4	140
Steering Column(1) Drive Shaft Universal Joints(2) Drive Shaft Support Bearing	Cat Utility	NLGI Grade 2	−30	40	−22	104

(1) HMU Steering
(2) 980 Drive Shaft is maintenance free.

Diesel Fuel Recommendations

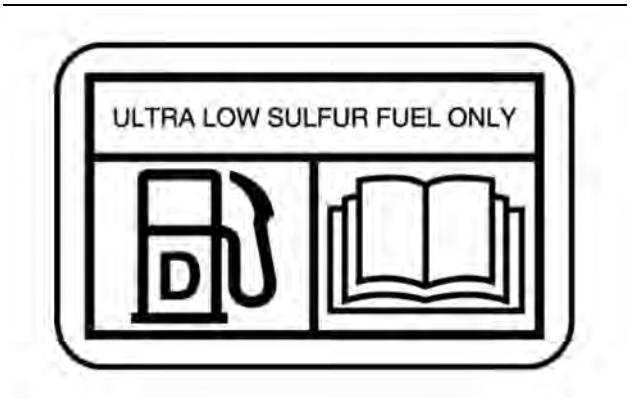

Illustration 352 g02157153

United States and Canada

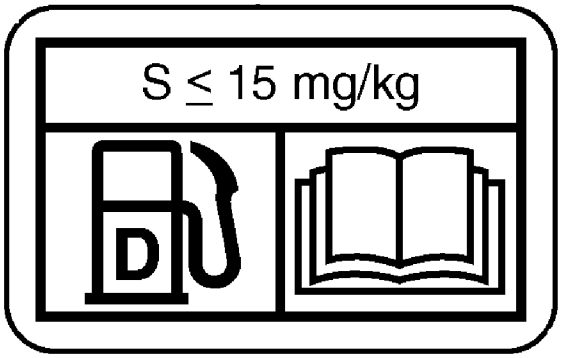

Illustration 353 g02052934

Rest of World Film

Diesel fuel must meet “Cat Specification for Distillate Fuel” and the latest versions of “ASTM D975” or “EN 590” to ensure optimum engine performance. Refer to Special Publication, SEBU6250, “Caterpillar Machine Fluids Recommendations” for the latest fuel information and for Cat fuel specification. This manual may be found on the Web at Safety.Cat.com.

NOTICE

Ultra Low Sulfur Diesel (ULSD) fuel 0.0015 percent (≤15 ppm (mg/kg)) sulfur is required by regulation for use in engines certified to nonroad Tier 4 standards (U.S. EPA Tier 4 certified) and that are equipped with exhaust aftertreatment systems.

European ULSD 0.0010 percent (≤10ppm (mg/kg) sulfur fuel is required by regulation for use in engines certified to European nonroad Stage IIIB and newer standards and are equipped with exhaust aftertreatment systems.

European ULSD 0.0010 percent (≤10ppm (mg/kg) at origin, or 0.0020 percent (≤20ppm (mg/kg) at point of final distribution, sulfur fuel having a cetane number ≥45 and an FAME (bio-diesel) content ≤ 7% (v/v) is required by regulation for use in engines certified to European nonroad Stage V and newer standards and are equipped with exhaust aftertreatment systems.

Misfueling with fuels of higher sulfur level may void the warranty or affect warranty claims coverage and have the following negative effects:

- **Shorten the time interval between aftertreatment device service intervals (cause the need for more frequent service intervals)**
- **Adversely impact the performance and life of aftertreatment devices (cause loss of performance)**
- **Reduce regeneration intervals of aftertreatment devices**
- Reduce engine efficiency and durability.
- Increase the wear.
- Increase the corrosion.
- Increase the deposits.
- Lower fuel economy
- Shorten the time period between oil drain intervals (more frequent oil drain intervals).
- Increase overall operating costs.

Failures that result from the use of improper fuels are not Cat factory defects. Therefore the cost of repairs would not be covered by a Cat warranty.

For Tier 4/Stage IIIB/Stage IV/Stage V certified engines always follow operating instructions. Fuel tank inlet labels are installed to ensure that the correct fuels are used.

Refer to Special Publication, SEBU6250, “Caterpillar Machine Fluids Recommendations” for more details about fuels, lubricants, and Tier 4 requirements.

Note: The maximum allowable fuel sulfur level is controlled by various emissions laws, regulations and mandates consult federal, state and local authorities for guidance on fuel requirements for your area.

Diesel fuel containing greater than .0015% (15 ppm) sulfur is acceptable for areas of the world where allowed by law. The engines in these territories are not equipped with aftertreatment. For these lesser regulated countries, refer to the following for allowable diesel fuel sulfur content.

For engines that do not use aftertreatment but do use Exhaust Gas Recirculation (EGR), diesel fuel containing more than 0.05% (500 ppm) sulfur is not approved.

For engines that DO NOT use aftertreatment nor use Exhaust Gas Recirculation (EGR), use of diesel fuel containing more than 1.0% (10,000 ppm) sulfur is not approved. Diesel fuel containing less than 0.1% (1,000 ppm) sulfur is highly recommended. Fuel sulfur levels between 0.5% (5,000 ppm) and up to 1.0% (10,000 ppm) may significantly shorten the oil change interval. Cat S.O.S. Service oil analysis is verystronglyrecommended. Refer to Special Publication, SEBU6250, “Caterpillar Machine Fluids Recommendations” “Total Base Number (TBN) and Fuel Sulfur Levels for Direct Injection (DI) Diesel Engines” for more information.

Diesel Exhaust Fluid (If Equipped)

General Information

Diesel Exhaust Fluid (DEF) is a liquid that is injected into the exhaust system of engines equipped with Selective Catalytic Reduction (SCR) systems. SCR reduces emissions of nitrogen oxides (NOx) in diesel engine exhaust.

Diesel Exhaust Fluid (DEF) is also known under other names including Aqueous Urea Solution (AUS) 32, AdBlue, or generically referred to as urea.

In engines equipped with SCR emissions reduction system, DEF is injected in controlled amounts into the engine exhaust stream. At the elevated exhaust temperature, urea in DEF is converted to ammonia. The ammonia chemically reacts with NOx in diesel exhaust in the presence of the SCR catalyst. The reaction converts NOx into harmless nitrogen (N2) and water (H2O).

DEF Recommendations

For use in Cat engines, DEF must meet all the requirements defined by “ISO 22241-1” Requirements.

Caterpillar recommends the use of DEF available through the Cat parts ordering system for use in Cat engines equipped with SCR systems.

In North America, commercial DEF that is API approved and meets all the requirements defined in “ISO 22241-1” may be used in Cat engines that are equipped with SCR systems.

Outside of North America, commercial DEF that meets all requirements defined in “ISO 22241-1” may be used in Cat engines that are equipped with SCR systems.

The supplier should provide documentation to prove that the DEF is compliant with the requirements of “ISO 22241-1”.

NOTICE
Cat does not warrant the quality or performance of non-Cat fluids.

NOTICE
Do not use agriculture grade urea solutions. Do not use any fluids that do not meet “ISO 22241-1” Requirements in SCR emissions reduction systems. Use of these fluids can result in numerous problems including damage to SCR equipment and a reduction in NOx conversion efficiency.

DEF is a solution of solid urea that is dissolved in demineralized water to produce a final concentration of 32.5% urea. DEF concentration of 32.5% is optimal for use in SCR systems. DEF solution of 32.5% urea has the lowest attainable freeze point of −11.5° C (11.3° F). DEF concentrations that are higher or lower than 32.5% have higher freeze points. DEF dosing systems and “ISO 22241-1” specifications are designed for a solution that is approximately 32.5%.

Caterpillar offers a refractometer, Cat part number 360-0774, that can be used to measure DEF concentration. Follow the instructions provided with the instrument. Appropriate commercial portable refractometers can be used to determine urea concentration. Follow the instructions from the manufacturer.

DEF Guidelines

DEF solution is typically colorless and clear. Changes to color or clarity are indicators of quality issues. Quality of DEF can degrade when stored and handled inappropriately or if DEF is not protected from contamination. Details are provided below.

If quality issues are suspected, testing of DEF should focus on urea percentage, alkalinity as NH3 and biuret content. DEF that does not pass all these tests or that is no longer clear should not be used.

Materials compatibility

DEF is corrosive. Due to the corrosion caused, DEF must be stored in tanks constructed of approved materials. Recommended storage materials:

Stainless Steels:

- 304 (S30400)
- 304L (S30403)
- 316 (S31600)
- 316L (S31603)

Alloys and metals:

- Chromium Nickel (CrNi)
- Chromium Nickel Molybdenum (CrNiMo)
- Titanium

Non-metallic materials:

- Polyethylene
- Polypropylene
- Polyisobutylene
- Teflon (PFA)
- Polyfluoroethylene (PFE)
- Polyvinylidene fluoride (PVDF)
- Polytetrafluoroethylene (PTFE)

Materials NOT compatible with DEF solutions include Aluminum, Magnesium, Zinc, Nickel coatings, Silver, and Carbon steel and Solders containing any of the above. Unexpected reactions may occur if DEF solutions come in contact with any non-compatible material or unknown materials.

Bulk storage

Follow all local regulations covering bulk storage tanks. Follow proper tank construction guidelines. Tank volume typically should be 110% of planned capacity. Appropriately vent indoor tanks. Plan for control of overflow of the tank. Heat tanks that dispense DEF in cold climates.

Bulk tank breathers should be fitted with filtration to keep airborne debris from entering the tank. Desiccant breathers should not be used because water will be absorbed, which potentially can alter DEF concentration.

Handling

Follow all local regulations covering transport and handling. DEF transport temperature is recommended to be −5° C (23° F) to 25° C (77° F). All transfer equipment and intermediate containers should be used exclusively for DEF. Containers should not be reused for any other fluids. Ensure that transfer equipment is made from DEF-compatible materials. Recommended material for hoses and other non-metallic transfer equipment includes:

- Nitrile Rubber (NBR)
- Fluoroelastomer (FKM)
- Ethylene Propylene Diene Monomer (EPDM)

The condition of hoses and other nonmetallics that are used with DEF should be monitored for signs of degradation. DEF leaks are easily recognizable by white urea crystals that accumulate at the site of the leak. Solid urea can be corrosive to galvanized or unalloyed steel, aluminum, copper, and brass. Leaks should be repaired immediately to avoid damage to surrounding hardware.

Cleanliness

Contaminants can degrade the quality and life of DEF. Filtering DEF is recommended when dispensed into the DEF tank. Filters should be compatible with DEF and should be used exclusively with DEF. Check with the filter supplier to confirm compatibility with DEF before using. Mesh-type filters using compatible metals, such as stainless steel, are recommended. Paper (cellulose) media and some synthetic filter media are not recommended because of degradation during use.

Care should be taken when dispensing DEF. Spills should be cleaned immediately. Machine or engine surfaces should be wiped clean and rinsed with water. Caution should be used when dispensing DEF near an engine that has recently been running. Spilling DEF onto hot components will cause harmful vapors.

Stability

DEF fluid is stable when stored and handled properly. The quality of DEF rapidly degrades when stored at high temperatures. The ideal storage temperature for DEF is between −9° C (15.8° F) and 25° C (77° F). DEF that is stored above 35° C (95° F) for longer than 1 month must be tested before use. Testing should evaluate Urea Percentage, Alkalinity as NH3 and Biuret content.

The length of storage of DEF is listed in the following table:

Table 40

Storage Temperature	Expected DEF Life
Below 25° C (77° F)	18 months
25° C (77° F) to 30° C (86° F)	12 months
30° C (86° F) to 35° C (95° F)	6 months
Above 35° C (95° F)	test quality before use

Refer to “ISO 22241” document series for more information about DEF quality control.

Note: Dispose of all fluids according to applicable regulations and mandates.

Fuel Additives

Cat Diesel Fuel Conditioner and Cat Diesel Fuel System Cleaner are available for use when needed. These products are applicable to diesel and biodiesel fuels. Caterpillar recommends the addition of Cat Diesel Fuel System Cleaner every 3000 hours of engine operation on particular models. Refer to "Diesel Fuel System Cleaner - Add" for model information. Contact your Cat dealer for availability.

Biodiesel

Biodiesel is a fuel that can be made from various renewable resources that include vegetable oils, animal fat, and waste cooking oil. Soybean oil and rapeseed oil are the primary vegetable oil sources. To use any of these oils or fats as fuel, the oils, or fats are chemically processed (esterified). The water and contaminants are removed.

U.S. distillate diesel fuel specification “ASTM D975-09a” includes up to B5 (5 percent) biodiesel. Currently, any diesel fuel in the U.S. may contain up to B5 biodiesel fuel.

European distillate diesel fuel specification “EN 590” includes up to B5 (5 percent) and in some regions up to B7 (7 percent) biodiesel. Any diesel fuel in Europe may contain up to B5 or in some regions up to B7 biodiesel fuel.

Note: The diesel portion used in the biodiesel blend must be Ultra Low Sulfur Diesel (15 ppm sulfur or less, per “ASTM D975”). In Europe the diesel fuel portion used in the biodiesel blend must be sulfur free diesel (10 ppm sulfur or less, per “EN 590”). The final blend must have 15 ppm sulfur or less.

Note: Up to B7 biodiesel blend level is acceptable for use in SSL, MTL, and CTL engines.

When biodiesel fuel is used, certain guidelines must be followed. Biodiesel fuel can influence the engine oil, aftertreatment devices, non-metallic, fuel system components, and others. Biodiesel fuel has limited storage life and has limited oxidation stability. Follow the guidelines and requirements for engines that are seasonally operated and for standby power generation engines.

To reduce the risks associated with the use of biodiesel, the final biodiesel blend, and the biodiesel fuel used must meet specific blending requirements.

All the guidelines and requirements are provided in the latest revision of Special Publication, SEBU6250, “Caterpillar Machine Fluids Recommendations”. This manual may be found on the Web at Safety.Cat.com.

Coolant Information

The information provided in this “Coolant Recommendation” section should be used with the “Lubricants Information” provided in the latest revision of Special Publication, SEBU6250, “Caterpillar Machine Fluids Recommendations”. This manual may be found on the Web at Safety.Cat.com.

The following two types of coolants may be used in Cat diesel engines:

Preferred – Cat ELC (Extended Life Coolant)

Acceptable – Cat DEAC (Diesel Engine Antifreeze/ Coolant)

NOTICE
Never use water alone as a coolant. Water alone is corrosive at engine operating temperatures. In addition, water alone does not provide adequate protection against boiling or freezing.

i08804182

Capacities (Refill)

SMCS Code: 7560

Note: All values are approximate refill capacities.

Table 41

272D3, 272D3 XE, 299D3, and 299D3 XE			
Compartment or System	**Liters**	**US Gallons**	**Imperial Gallons**
Engine Crankcase	13.2 (1)	3.5 (2)	2.9 (3)
Hydraulic Tank	39	10.3	8.6
Cooling System	15.5	4.1	3.4
Fuel Tank	122	32.2	26.8
Fuel Tank 299D3 XE Land Management	110 (4)	29 (4)	24.1 (4)
Diesel Engine Fluid (DEF) Tank	18.9	5.0	4.2
Window Washer Fluid	2	0.53	0.44

(1) The amount includes 1L in the filter.
(2) The amount includes 0.26G in the filter.
(3) The amount includes 0.22G in the filter.
(4) Each Tank

Table 42

226D3 (DX8 & D5R), 232D3 (HRS, PWN & D5Z), 239D3 (HC9 & KE9), and 249D3 (P9C & R9E)			
Compartment or System	**Liters**	**US Gallons**	**Imperial Gallons**
Engine Crankcase	8.2 (1)	2.2 (2)	1.8 (3)
Hydraulic Tank	35	9.2	7.7
Cooling System	14.0	3.7	3.1
Fuel Tank	57	15.1	12.5
Window Washer Fluid	2	0.53	0.44

(1) The amount includes 1L in the filter.
(2) The amount includes 0.26G in the filter.
(3) The amount includes 0.22G in the filter.

Table 43

226D3 (EK5), 232D3 (GJ5), 239D3 (K5S & RWK), and 249D3 (WS5 & WKD)			
Compartment or System	**Liters**	**US Gallons**	**Imperial Gallons**
Engine Crankcase	7.9(1)	2.1(2)	1.7 (3)
Hydraulic Tank	35	9.2	7.7
Cooling System	14.0	3.7	3.1
Fuel Tank	57	15.1	12.5
Window Washer Fluid	2	0.53	0.44

(1) The amount includes 0.3L in the filter.
(2) The amount includes 0.08G in the filter.
(3) The amount includes 0.07G in the filter.

Table 44

236D3, 242D3, 246D3, 257D3, 259D3, 262D3, 279D3, and 289D3			
Compartment or System	**Liters**	**US Gallons**	**Imperial Gallons**
Engine Crankcase	11.2 (1)	3.0 (2)	2.5 (3)
Hydraulic Tank	39	10.3	8.6
Cooling System	14	3.7	3.1
Fuel Tank (236D3, 242D3, 257D3, 259D3)	105	27.7	23.1
Fuel Tank (246D3, 262D3, 279D3, 289D3)	94	24.8	20.7
Window Washer Fluid	2	0.53	0.44

(1) The amount includes 1L in the filter.
(2) The amount includes 0.28G in the filter.
(3) The amount includes 0.22G in the filter.

Table 45

Wheeled Machines (SSL)			
Compartment or System	**Liters**	**US Gallons**	**Imperial Gallons**
Each Drive Chain Case (226D3, 232D3)	7.0	1.8	1.5
Each Drive Chain Case (236D3, 242D3)	8.8	2.3	1.9
Each Drive Chain Case (246D3, 262D3)	12.7	3.3	2.8
Each Drive Chain Case (272D3, 272D3 XE)	10.2	2.7	2.2
Special Application Oil-Filled Axle (226D3, 232D3, 236D3, 242D3)	0.2	0.05	0.04
Special Application Oil-Filled Axle (246D3, 262D3, 272D3, 272D3 XE)	0.6	0.16	0.13

Table 46

Tracked Machines (CTL and MTL)			
Compartment or System	**Liters**	**US Gallons**	**Imperial Gallons**
Final Drive	1.0	0.26	0.22

Table 47

Multi Terrain Loaders (MTL)		
Compartment or System	**Milliliters**	**Grams**
Roller and Idler Axle Spindle (CAT DEO 10W-30)	33 ± 3 ml	N/A
Roller and Idler Axle Spindle (Cat Arctic Platinum, NLGI Grade 00)	N/A	30 ± 5 g
Roller and Idler Axle Tube (Cat Advanced 3Moly, NLGI Grade 02)	N/A	30 ± 5 g

Table 48

Compact Track Loaders (CTL)	
Compartment or System	**Milliliters**
Track Roller (239D3, 249D3)	165 ± 12 ml
Idler - Single Flange (239D3, 249D3)	230 ± 15 ml
Idler - Dual Flange (239D3, 249D3)	200 ± 15 ml
Idler - Triple Flange (239D3, 249D3)	230 ± 15 ml

(continued)

(Table 48, contd)

Track Roller (All Other)	240 ± 12 ml
Idler - Single Flange (All Other)	349 ± 12 ml
Idler - Dual Flange (All Other)	354 ± 15 ml
Idler - Triple Flange (All Other)	354 ± 15 ml

Table 49

Steel Track Loaders	
Compartment or System	**Milliliters**
Steel Track Idler	354 ± 12 ml
Steel Track Roller	240 ± 5 ml
Steel Track Carry Roller	215 ± 5 ml
Steel Track Pin	15 ± 0.5 ml

Table 50

HVAC R-134a Refrigerant (If Equipped)			PAG 46
Models	**kg**	**lbs**	**cc**
226D3, 232D3, 239D3, 249D3	0.81	1.8	150
236D3, 242D3, 257D3, 259D3	0.81	1.8	150
246D3, 262D3, 279D3, 289D3	1.00	2.2	150
272D3, 272D3 XE, 299D3, 299D3 XE	0.81	1.8	150

i07445339

S·O·S Information

SMCS Code: 1000; 7000; 7542-008

S·O·S Services is a highly recommended process for Cat customers to use in order to minimize owning and operating cost. Customers provide oil samples, coolant samples, and other machine information. The dealer uses the data in order to provide the customer with recommendations for management of the equipment. In addition, S·O·S Services can help determine the cause of an existing product problem.

Refer to Special Publication, SEBU6250, “Caterpillar Machine Fluid Recommendations” for detailed information concerning S·O·S Services.

The effectiveness of S·O·S Services is dependent on timely submission of the sample to the laboratory at recommended intervals.

Refer to the Operation and Maintenance Manual, “Maintenance Interval Schedule” for a specific sampling location and a service hour maintenance interval.

Consult your Cat dealer for complete information and assistance in establishing an S·O·S program for your equipment.

Maintenance Support

i07435003

Prepare the Machine for Maintenance

SMCS Code: 1000; 7000

Refer to the following procedure before you perform any maintenance to the machine.

WARNING

Personal injury can result from hydraulic oil pressure and hot oil.

Hydraulic oil pressure can remain in the hydraulic system after the engine has been stopped. Serious injury can be caused if this pressure is not released before any service is done on the hydraulic system.

Make sure all of the attachments have been lowered, oil is cool before removing any components or lines. Remove the oil filler cap only when the engine is stopped, and the filler cap is cool enough to touch with your bare hand.

WARNING

Sudden movement of the machine or release of oil under pressure can cause injury to persons on or near the machine.

To prevent possible injury, perform the procedure that follows before testing and adjusting the power train.

NOTICE

Care must be taken to ensure that fluids are contained during performance of inspection, maintenance, testing, adjusting, and repair of the product. Be prepared to collect the fluid with suitable containers before opening any compartment or disassembling any component containing fluids.

Refer to Special Publication, PERJ1017, “Dealer Service Tool Catalog” for tools and supplies suitable to collect and contain fluids on Cat ® products.

Dispose of all fluids according to local regulations and mandates.

Note: Permit only one operator on the machine. Keep all other personnel away from the machine or in view of the operator.

1. Move the machine to a smooth, level location that is away from operating machines and away from personnel.
2. Engage the parking brake. Place wheel blocks in front and behind the wheels or tracks.
3. Lower the work tool to the ground.
4. Stop the engine.
5. Make sure that all hydraulic oil pressure is released before performing any maintenance on the machine. Refer to Operation and Maintenance Manual, “System Pressure Release” for more information.

Perform a visual inspection first. If the visual checks are completed but the problem has not been identified, perform operational checks. If the problem has not been identified, perform instrument tests. This procedure will help to identify system problems.

i07435082

System Pressure Release

SMCS Code: 1250-553-PX; 1300-553-PX; 1350-553-PX; 3000-553-PX; 5050-553-PX; 5612-553-PX; 6700-553-PX

WARNING

Personal injury can result from hydraulic oil pressure and hot oil.

Hydraulic oil pressure can remain in the hydraulic system after the engine has been stopped. Serious injury can be caused if this pressure is not released before any service is done on the hydraulic system.

Make sure all of the attachments have been lowered, oil is cool before removing any components or lines. Remove the oil filler cap only when the engine is stopped, and the filler cap is cool enough to touch with your bare hand.

Use the following procedure to release the pressure in the hydraulic system. Perform this procedure before any work is done to the hydraulic system.

1. Start the engine and allow the engine to run for at least 15 seconds to recharge the accumulator.
2. Stop the engine. Keep the armrests in the LOWERED position. Turn the engine start switch to the ON position. Push the parking brake switch.
3. Move the electrohydraulic controls through all the positions.
4. Toggle the auxiliary switch multiple times.
5. Turn the engine start switch to the OFF position.

The pressure in the hydraulic system has now been released.

Note: Some hydraulic lines on the downstream side of the accumulator may still contain pressurized oil. Use caution when you disconnect these hydraulic lines.

i09644786

Service Interval Chart

SMCS Code: 7000

Refer to the following service interval charts and service intervals for additional maintenance information.

Example Service Interval Chart

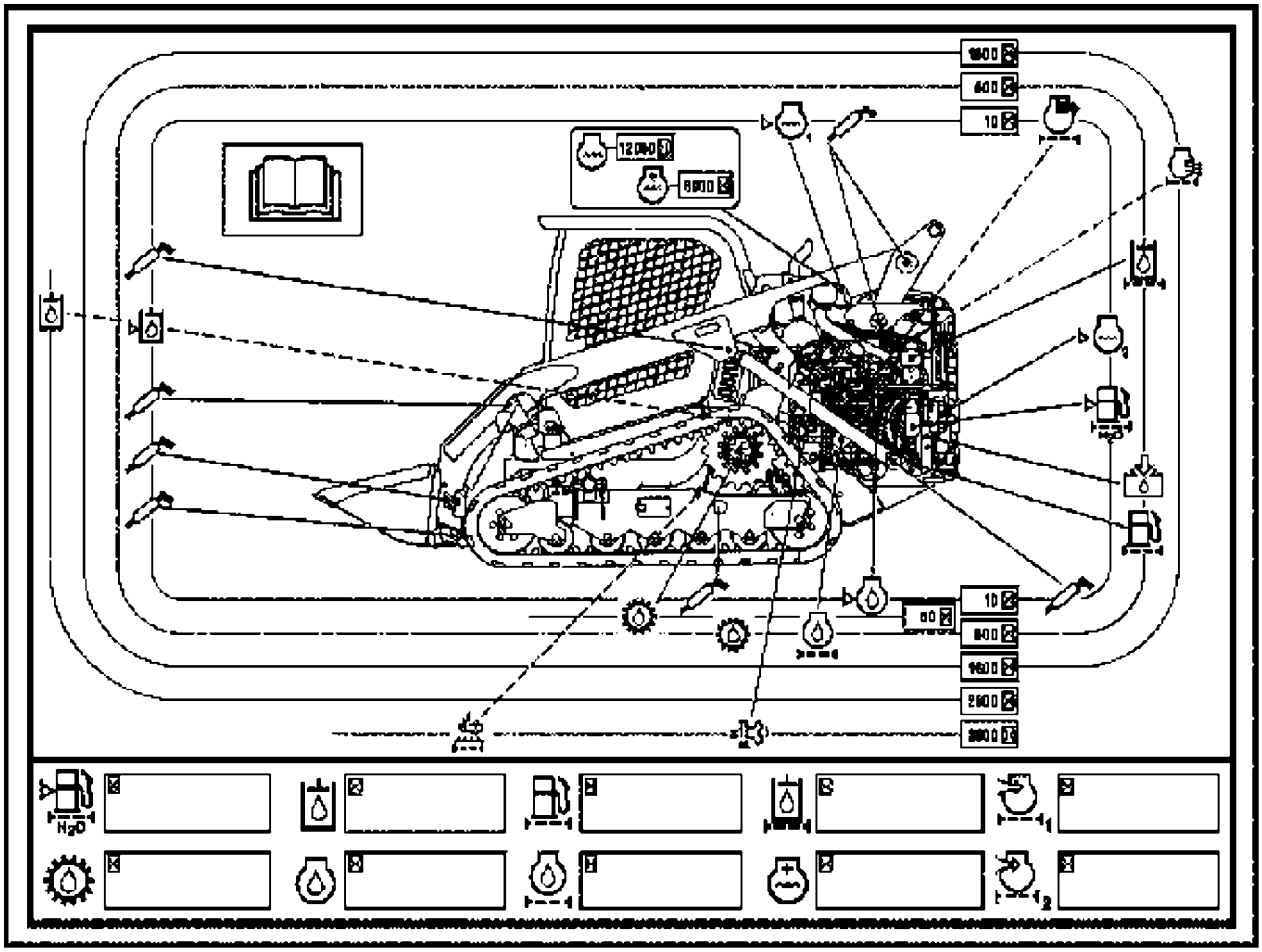

Illustration 354 g06039562

Service Intervals

Use the example service interval chart and the following information as a guide only. The specific service interval chart film for your machine is on the back side of the engine access door.

Reference: Always refer to the Operation and Maintenance Manual, “Maintenance Interval Schedule” for details about each maintenance item.

Cab Air Filter – Clean the filter element as needed based on the working conditions. Replace the filter every 500 service hours at a minimum.

Closed Circuit Breather Element – Change the breather element after every 1500 service hours.

Coolant level (radiator) – Check the coolant level in the radiator at the sight gauge after every 10 service hours or daily.

Coolant level (reservoir) – Check the coolant level in the coolant reservoir after every 10 service hours or daily.

Coolant additive – Add the extender to the extended life coolant after every 6000 service hours or every 3 years.

Cooling system coolant – Change the ELC (Extended Life Coolant) after every 12,000 hours or every 6 years.

Diesel Exhaust Fluid Filter – The DEF filter must be replaced every 3000 hours.

Diesel Particulate Filter Clean – The DPF should be cleaned or replaced by your Cat dealer as When Required.

Drive Chain Case Oil (Wheeled Machines Only) – Check the oil level every 500 service hours. Change the Drive Chain Case oil after every 1000 service hours.

Final Drive Oil (Tracked Machines Only) – Change the final drive oil after the initial 250hrs. Check the final drive oil level after every 250 hrs. Change the final drive oil after every 500 hrs.

Engine air filter primary element – Clean the primary air filter element as needed based on the working conditions. The alert indicator for the air filter indicates when servicing is necessary. Replace the primary air filter element after every 500 service hours.

Engine air filter secondary element – Replace the secondary air filter element with every third cleaning of the primary air filter element, or replace the secondary air filter element if the alert indicator for the air filter stays lit after a clean primary air filter element is installed. Never attempt to reuse the secondary air filter element by cleaning it.

Engine oil level check – Check the engine oil level after every 10 service hours or daily.

Engine oil – Change the engine oil after every 500 service hours.

Engine oil filter – Change the filter after every 500 service hours.

Fuel system water separator – Drain the water separator after every 10 service hours or daily.

Fuel Pump Filter – Replace the filter after every 500 service hours.

Fuel System Filter/Water Separator Element – Drain the water from the bowl after every 10 service hours or daily. Replace the filter after every 500 service hours.

Diesel Fuel System Cleaner (C2.2 Only) – Add Cat Diesel Fuel System Cleaner to a full tank of diesel every 3000 hours.

Grease zerk – Lubricate the designated locations after every 10 service hours or daily.

Hydraulic oil filter – Change the filter after every 1000 hrs.

Hydraulic oil level check – Check the hydraulic oil level at the sight gauge after every 10 service hours or daily.

Hydraulic oil – Change the hydraulic oil after every 2000 service hours.

Hydraulic Tank Breather – Replace the breather after every 500 service hours.

i07943899

Fire Suppression System Shutdown and Isolation

SMCS Code: 7000; 7401

WARNING

To prevent accidental discharge of the Fire Suppression Agent, while performing any service or maintenance, the machine must be isolated. Fire Suppression isolation is necessary since the Fire Suppression System will remain active with the battery disconnect switch in the OFF position.

Failure to follow these instructions could result in personal injury or death.

The Fire Suppression System isolation procedure should be performed by a trained technician, authorized by the OEM manufacturer.

Before any service or maintenance on the machine is performed, you must isolate the fire suppression system. The isolation procedure should be performed by a trained technician, authorized by the OEM manufacturer.

In the event of a power loss, the fire suppression system is equipped with a backup battery. The battery will ensure that the fire suppression system will remain active during such period.

During normal operation, service, or maintenance, the engine shutdown switch turned to the OFF position, will not deactivate the fire suppression system.

Service or maintenance, on or near the fire suppression system, could inadvertently activate the system and release the fire suppression agent.

To Place in Isolation Mode

1. Turn off the engine. Place the engine start switch in the OFF position.
2. Switch the battery disconnect switch to the OFF position. Refer to Operation Maintenance Manual Operation Information “Battery Disconnect Switch”.

Note: The following steps should be performed by a trained technician, authorized by the OEM manufacturer:

Illustration 355 g06490108

(1) Delay/Reset/Silence" Button

3. Locate the fire suppression isolation switch . Press and hold the "Delay/Reset/Silence" button (1) for approximately 8 seconds causing two consecutive resets; control module cycles through two SDR and LED tests.

To Return to Normal Mode

Illustration 356 g06490177

(1) Delay/Reset/Silence" Button
(2) Power LED

1. Press and hold the "Delay/Reset/Silence" button for 3 seconds; Power LED and sounder quickly pulse 3 or 5 times, then Power LED remains Green steady-on.

i07319926

Welding on Machines and Engines with Electronic Controls

SMCS Code: 1000; 7000

Do not weld on any protective structure. If a repair is necessary to a protective structure, contact your Caterpillar dealer.

Proper welding procedures are necessary to avoid damage to the electronic controls and to the bearings. When possible, remove the component that must be welded from the machine or the engine and then weld the component. If you must weld near an electronic control on the machine or the engine, temporarily remove the electronic control to prevent heat-related damage. The following steps should be followed to weld on a machine or an engine with electronic controls.

NOTICE
Do not weld near the thermal detection wire. Heat from welding may cause the thermal detection wire to activate the fire suppression system.

When performing any machine maintenance or service, the fire suppression system must be isolated. If equipped with fire suppression system, isolate the system. Refer to this Operation and Maintenance Manual.

Note: Machines built with the optional factory installed fire suppression are equipped with a backup battery. The fire suppression system will remain powered when the machine battery disconnect switch is in the OFF position.

1. Turn off the engine. Place the engine start switch in the OFF position.
2. If equipped, turn the battery disconnect switch to the OFF position. If there is no battery disconnect switch, remove the negative battery cable at the battery.

NOTICE
Do NOT use electrical components (ECM or sensors) or electronic component grounding points for grounding the welder.

3. Clamp the ground cable from the welder to the component that will be welded. Place the clamp as close as possible to the weld. Make sure that the electrical path from the ground cable to the component does not go through any bearing. Use this procedure to reduce the possibility of damage to the following components:
   - Bearings of the drive train
   - Hydraulic components
   - Electrical components
   - Other components of the machine
4. Protect any wiring harnesses and components from the debris and the spatter which is created from welding.
5. Use standard welding procedures to weld the materials together.

i09665277

Maintenance Interval Schedule

SMCS Code: 7000

Ensure that all safety information, warnings, and instructions are read and understood before any operation or any maintenance procedures are performed.

The user is responsible for the performance of maintenance. All adjustments, the use of proper lubricants, fluids, filters, and the replacement of components due to normal wear and aging are included. Failure to adhere to proper maintenance intervals and procedures may result in diminished performance of the product and/or accelerated wear of components.

Use mileage, fuel consumption, service hours, or calendar time, WHICH EVER OCCURS FIRST, in order to determine the maintenance intervals. Products that operate in severe operating conditions may require more frequent maintenance. Refer to the maintenance procedure for any other exceptions that may change the maintenance intervals.

Note: The aftertreatment system can be expected to function properly for the useful life of the engine (emissions durability period), as defined by regulation. All prescribed maintenance requirements must be followed.

Note: Before each consecutive interval is performed, all maintenance from the previous interval must be performed.

Note: If Cat HYDO Advanced hydraulic oils are used, the hydraulic oil change interval is extended substantially. S·O·S services may extend the oil change even longer. Consult your Cat dealer for details.

When Required

Every 10 Service Hours or Daily

Initial 50 Service Hours

Every 50 Service Hours or Weekly

Initial 100 Service Hours

Initial 250 Service Hours

Every 250 Service Hours

Initial 500 Hours (for New Systems, Refilled Systems, and Converted Systems)

Every 500 Service Hours

Every 1000 Service Hours

Every 1500 Service Hours

Every 2000 Service Hours

Every 3000 Service Hours

Every 3 Years

Every 6000 Service Hours or 3 Years

Every 12 000 Service Hours or 6 Years

i07638254

Air Cleaner Dust Valve - Clean/ Inspect

SMCS Code: 1051-571-VL

Service the air filter elements when the alert indicator for air filter restriction lights. Refer to Operation and Maintenance Manual, “Alert Indicators” for information about the indicator.

1. Open the engine access door.

2. The air filter housing is located on the right side of the engine compartment.

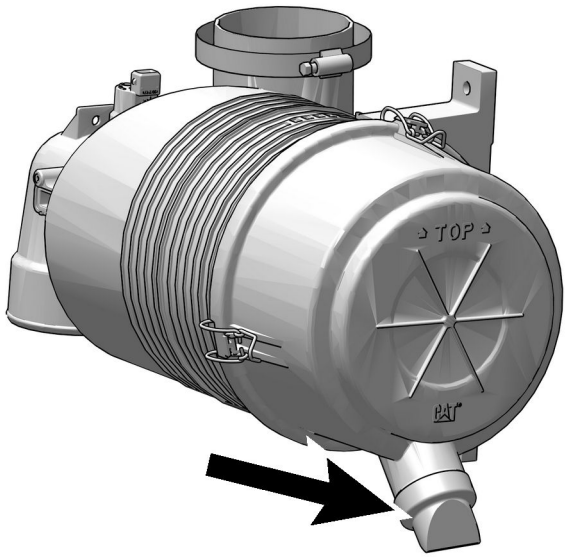

Illustration 357 g06383437

3. Check the dust valve after every 10 service hours or at the end of each day. Actuate the valve by squeezing the lips of the valve to remove any accumulated debris.

i05289983

Air Conditioner Condenser - Clean

(If Equipped)

SMCS Code: 1805-070

WARNING

Personal injury can result from air pressure.

Personal injury can result without following proper procedure. When using pressure air, wear a protective face shield and protective clothing.

Maximum air pressure at the nozzle must be less than 205 kPa (30 psi) for cleaning purposes.

The air conditioner condenser is attached to the engine access door.

Note: Blow compressed air through the core in the opposite direction of air flow to clean condenser.

i07376706

Axle Bearings - Lubricate
(MTL Only)

SMCS Code: 3282-086-BD

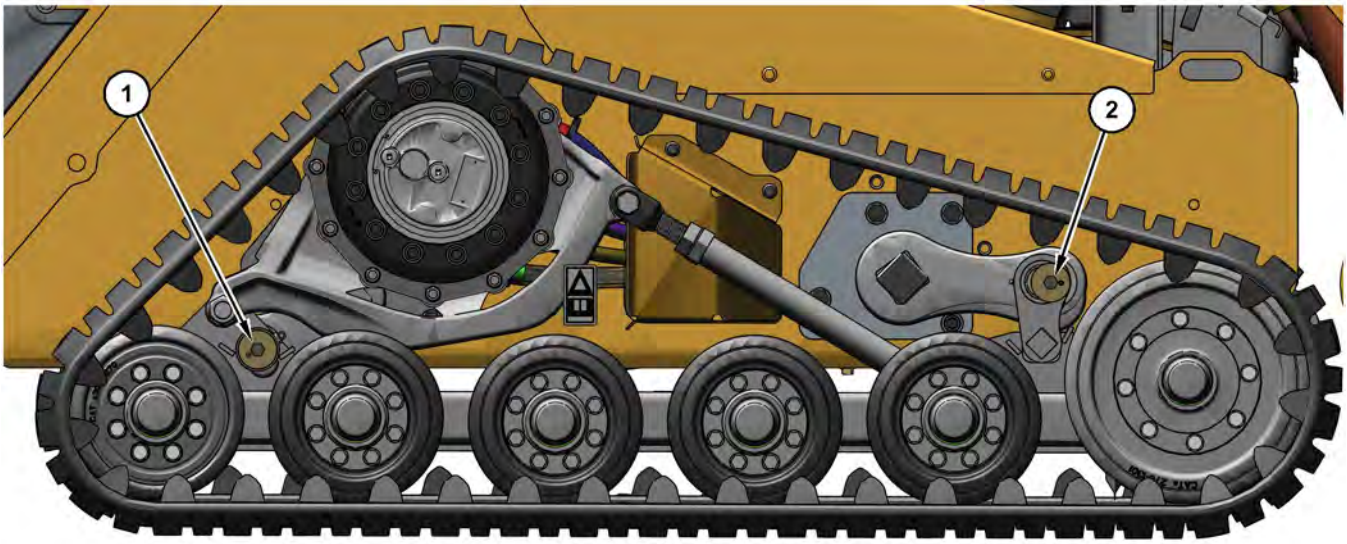

Illustration 358 g06383471

Single Level Suspension (SLS) undercarriage

(1) Rear pivot (2) Front pivot

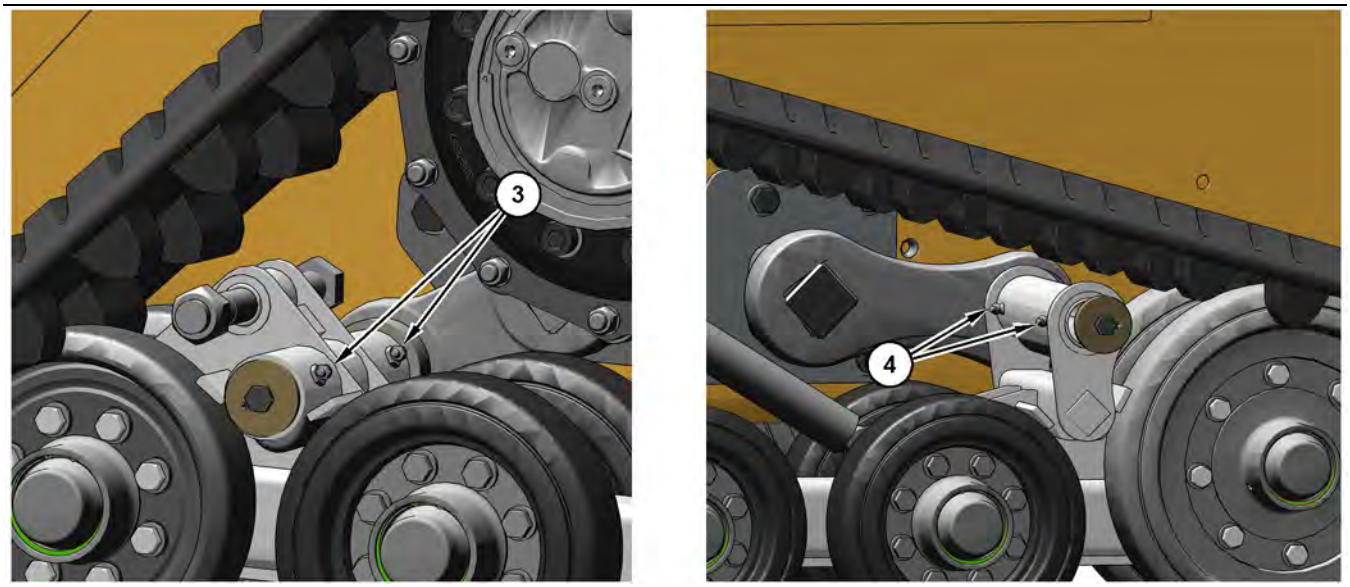

Illustration 359 g06383515

(3) Rear grease zerks (4) Front grease zerks

Apply lubricant to all grease fittings.

Repeat the process for the opposite side of the machine.

i07638285

Axle Bearings - Lubricate
(CTL - Steel Track)

SMCS Code: 3282-086-BD

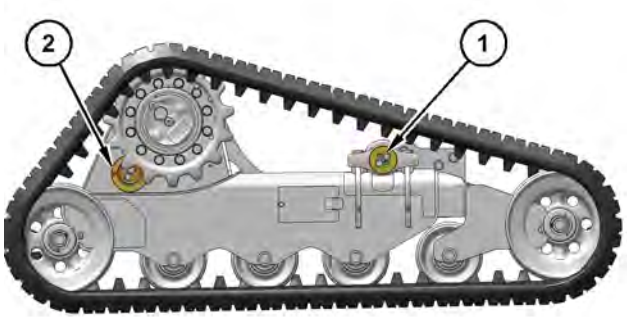

Illustration 360 g06405526

Apply lubricant to all grease fittings.

(1) Front pivot

(2) Rear pivot

Repeat the process for the opposite side of the machine.

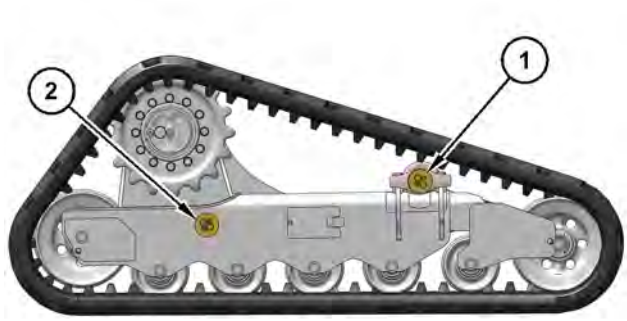

Illustration 361 g06410401

(1) Front Pivot
(2) Rear Pivot

i02580453

Backup Alarm - Test

SMCS Code: 7406-081

To prevent injury, make sure that no people are working on the machine or near the machine. To prevent injury, keep the machine under control at all times.

1. Get into the operator's seat. Fasten the seat belt and pull the armrests downward.
2. Start the engine.
3. Disengage the parking brake.
4. Move the joystick control to the REVERSE position.

   The backup alarm should sound immediately. The backup alarm should continue to sound until the joystick control is returned to the NEUTRAL position or to the FORWARD position.

i06607826

Battery or Battery Cable - Inspect/Replace

SMCS Code: 1401-561; 1401-040; 1401-510; 1402-040; 1402-510

Battery Life and Recommended Practices

Battery life is very difficult to predict and can vary greatly based on a number of factors including:

- Battery age
- Machine configuration
- Engine starting frequency
- Ambient conditions
- Storage practices

There are a number of components that draw small amounts of electrical current even when the key switch is OFF. Some of these include:

- Electronic control modules for the machine, engine, emissions system, etc
- Radios or displays with memory features
- Product Link or other GPS-based systems

It is recommended to start and operate your machine normally for at least 15 minutes every few weeks to prevent battery discharge which may damage the battery beyond simple recharge. This time should be extended during the winter as the load on the battery increase with extended heater usage, heated seat usage, and typically increased usage of the work lights.

The use of a battery disconnect switch or disconnection of the battery cables is recommended if the machine will sit longer than a few weeks under normal conditions. The use of a battery disconnect switch may be advisable at the end of each working day in extreme ambient conditions.

Additional references:

- “Operation and Maintenance Manual” Machine Storage Procedure
- “Operation and Maintenance Manual” DEF Guidelines
- “Operation and Maintenance Manual” Battery Disconnect Switch
- “Operation and Maintenance Manual” Engine Starting

Inspect / Replace

1. Turn the engine start switch to the OFF position. Turn all switches to the OFF position.
2. The battery is located in the engine compartment and may either be on the left-hand side or right-hand side. Open the engine access door.
3. Disconnect the negative battery cable at the battery.

Note: Do not allow the disconnected battery cable to contact the negative battery post.

4. Disconnect the negative battery cable from the frame in order to inspect the cable.
5. Disconnect the positive battery cable at the battery.
6. Perform the necessary repairs. Replace the cables or the battery, as needed.
7. Connect the positive battery cable at the battery.
8. Connect the negative battery cable to the frame of the machine.
9. Connect the negative battery cable at the battery.
10. Close the engine access door.

Recycle the Battery

Always recycle a battery. Never discard a battery.

Always return used batteries to one of the following locations:

- A battery supplier
- An authorized battery collection facility
- Recycling facility

i07656964

Belts - Inspect/Adjust

SMCS Code: 1357-040; 1357-025; 1397-040; 1397-025

If a new belt is installed, check the belt adjustment after 30 minutes of operation. A belt is considered used after 30 minutes of operation.

Belts

1. Stop the engine in order to inspect the belt.
2. Open the engine access door. Refer to Operation and Maintenance Manual, “Access Doors and Covers”.

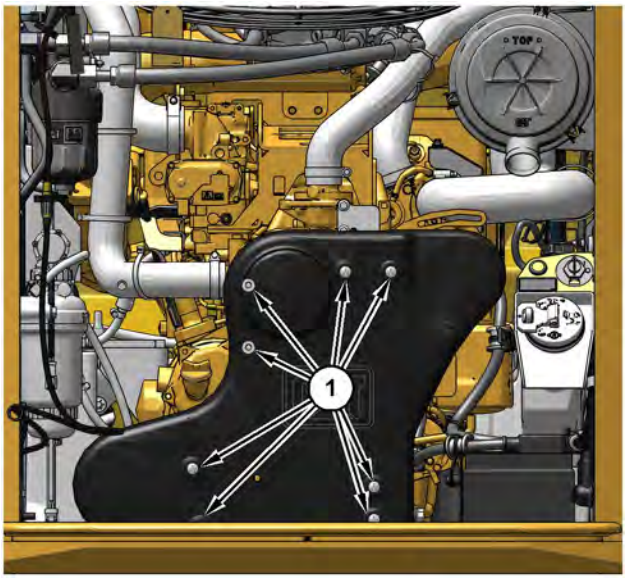

Illustration 362 g06387483
Typical Example

3. Loosen the quarter-turn fasteners (1) on the front of the guard.
4. Remove the guard for the V-belt.

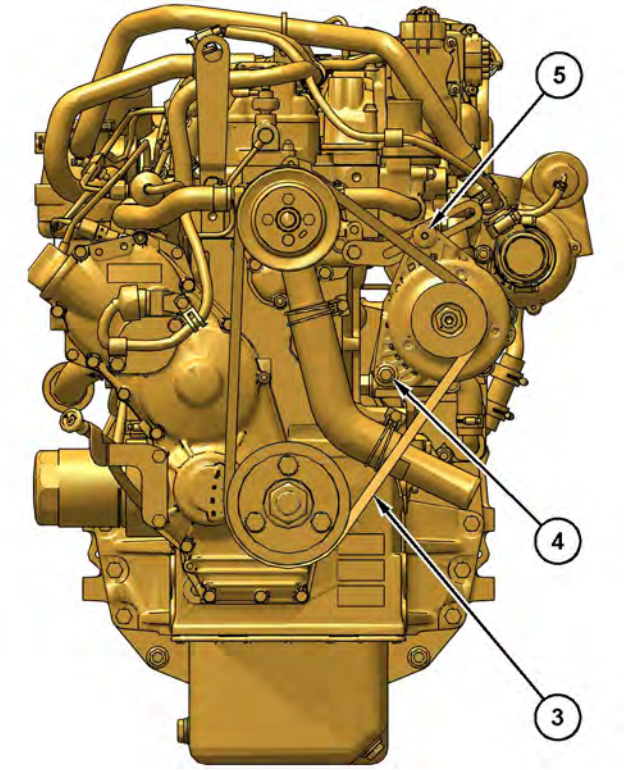

Illustration 363 g06387503

C2.2

(3) V-belt
(4) Alternator mounting bolt
(5) Adjusting bolt

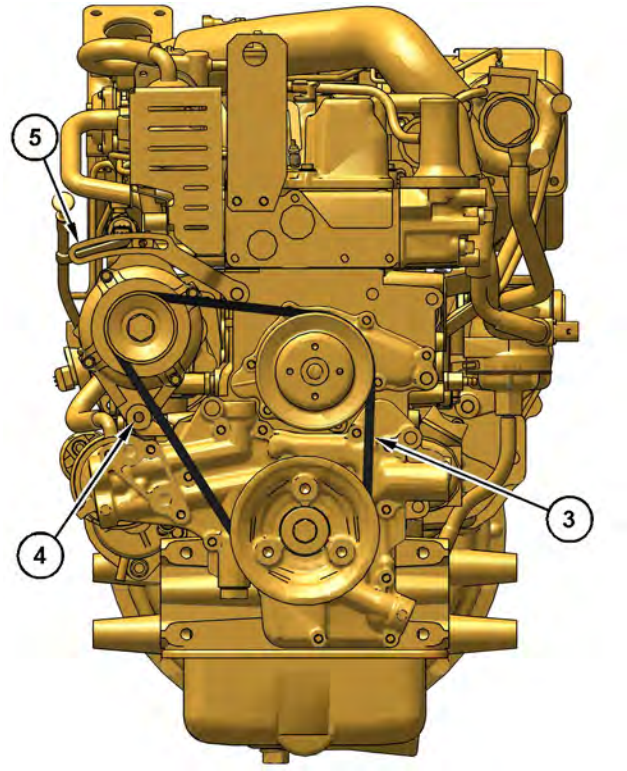

Illustration 364 g06387492

C3.3B

(3) V-belt
(4) Alternator mounting bolt
(5) Adjusting bolt

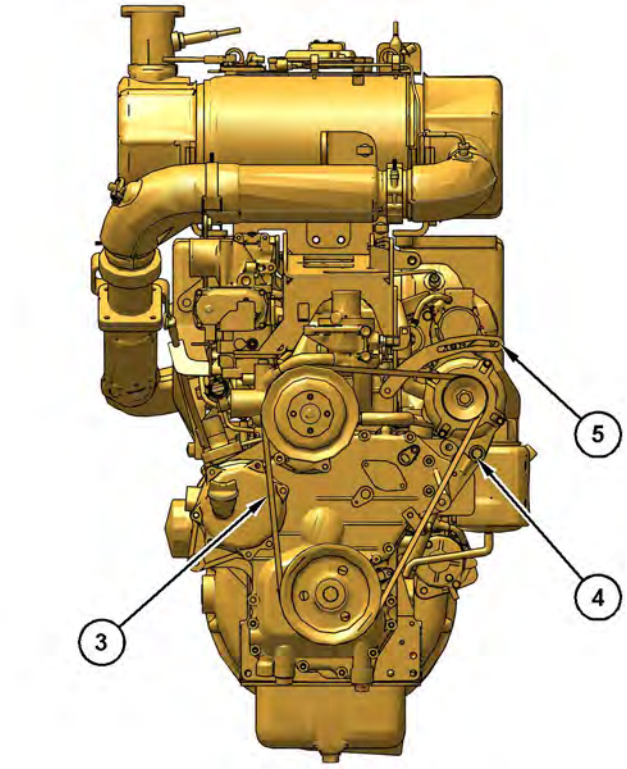

Illustration 365 g06387486

C3.8

(3) V-belt
(4) Alternator mounting bolt
(5) Adjusting bolt

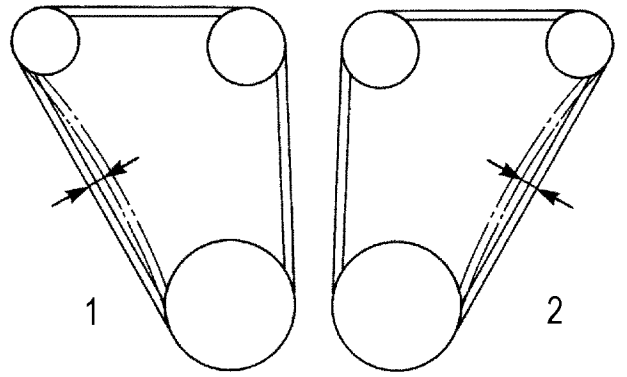

Illustration 366 g03821106

(1) C3.3B
(2) C2.2 and C3.8

5. Inspect the condition of the belt and the adjustment of the belt. The belt should deflect 10 mm (0.39 inch) to 12 mm (0.47 inch) under a straight pull of 10 kg (22 lb). This measurement should be taken between the alternator pulley and the crankshaft pulley.

Note: A 144 - 0235 Borroughs Belt Tension Gauge may be used to measure belt tension. This measurement should be taken between the alternator pulley and the crankshaft pulley. Refer to the following table for belt tension.

Table 51

Belt Tension Initial	Belt Tension Used
534 ± 22 N (120 ± 5 lb)	400 ± 44 N (90 ± 10 lb)

6. Loosen the mounting bolt (4). Loosen the adjusting bolt (5).

7. Move the alternator until the correct tension is reached.

8. Tighten the adjusting bolt. Tighten the mounting bolt.

9. Recheck the belt deflection. If the amount of deflection is incorrect, repeat step 5 to step 8.

Air Conditioner (if equipped)

Note: If your machine is equipped with an air conditioner, use the same procedure and the same measurements for the belt tension.

1. Inspect the condition of the belt and the adjustment of the belt. The belt should deflect 10 mm (0.39 inch) to 12 mm (0.47 inch) under a straight pull of 10 kg (22 lb). This measurement should be taken between the air conditioner compressor pulley and the crankshaft pulley.

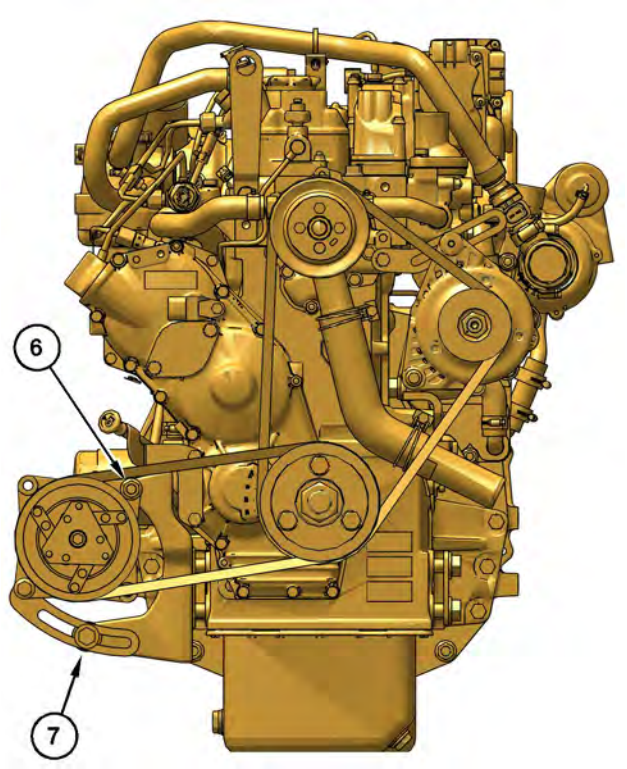

Illustration 367 g06387511

C2.2

(6) Mounting bolt
(7) Adjusting bolt

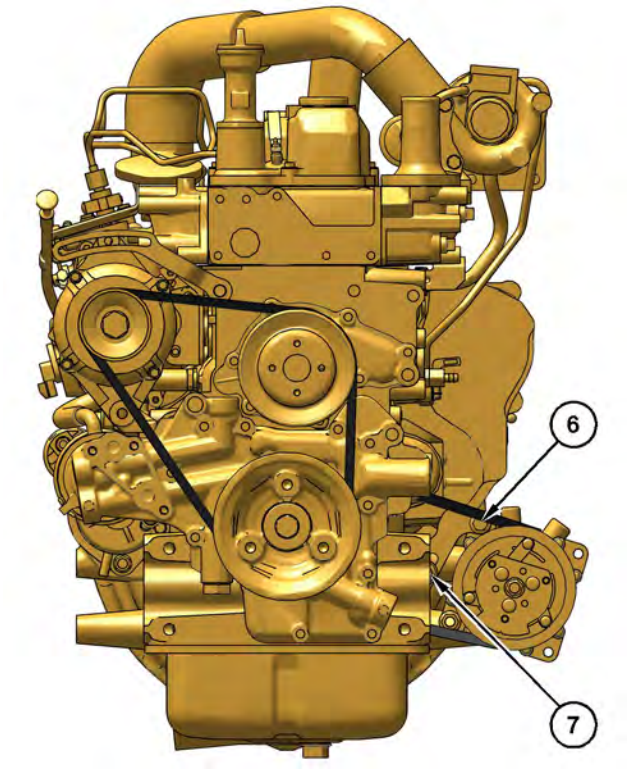

Illustration 368 g06387497

C3.3B

(6) Mounting bolt
(7) Adjusting bolt

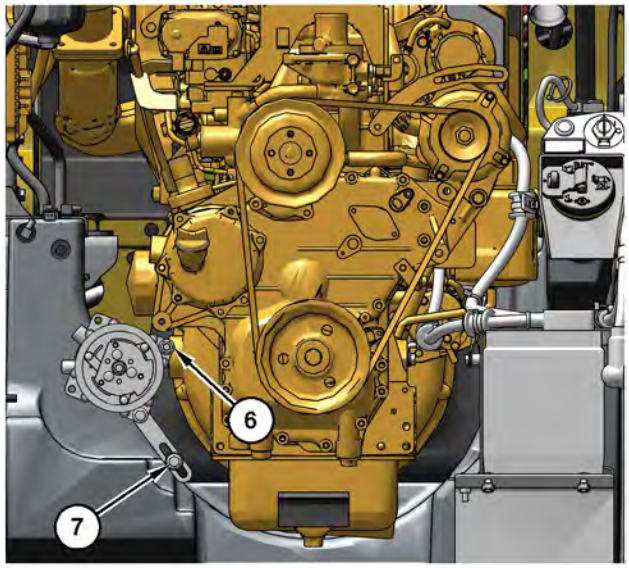

Illustration 369 g06387520

C3.8

(6) Mounting bolt
(7) Adjusting bolt

2. Loosen the mounting bolt (6) for the air conditioner compressor. Loosen the adjusting bolt (7) for the air conditioner compressor.
3. Move the air conditioner compressor until the correct tension is reached.
4. Tighten the adjusting locknut. Tighten the mounting bolt.
5. Recheck the belt deflection. If the amount of deflection is incorrect, repeat step 2 to step 4.

Finish

1. Install the guard for the V-belt.

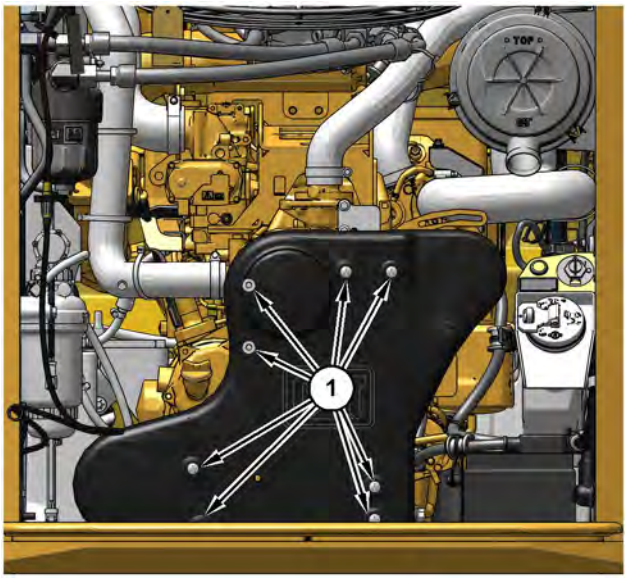

Illustration 370 g06387483
Typical Example

2. Tighten the quarter-turn fasteners (1)
3. Close the engine access door.

i07659108

Belts - Replace

SMCS Code: 1357-510; 1397-510

1. Stop the engine to replace belt.
2. Open the engine access door. Refer to Operation and Maintenance Manual, Access Doors and Covers.

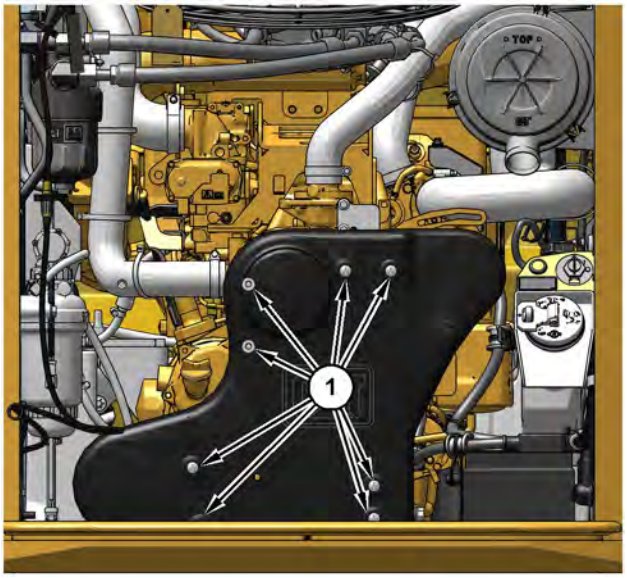

Illustration 371 g06387483
Typical Example

3. Loosen the quarter-turn fasteners (1) on the front of the belt protection guard, and remove guard to access belt.
4. Loosen the mounting bolt and adjusting bolt, decrease tension in belt.
5. Remove belt.
6. Install new belt. Be sure that the belt is fully seated on the pulleys.
7. Move the alternator until the correct tension 534 ± 22 N·m (120 ± 5 lb) is reached.

Note: A 144-0235 Borroughs Belt Tension Gauge may be used to measure belt tension. This measurement should be taken between the alternator pulley and the crankshaft pulley.

8. Tighten the adjusting bolt. Tighten the mounting bolt.
9. Install belt protection guard.

Air Conditioner (if equipped)

Note: If your machine is equipped with an air conditioner, use the same procedure and the same measurements for the belt tension.

i07690426

Blade Frame - Adjust

SMCS Code: 6060-025-BG

Height Adjustment

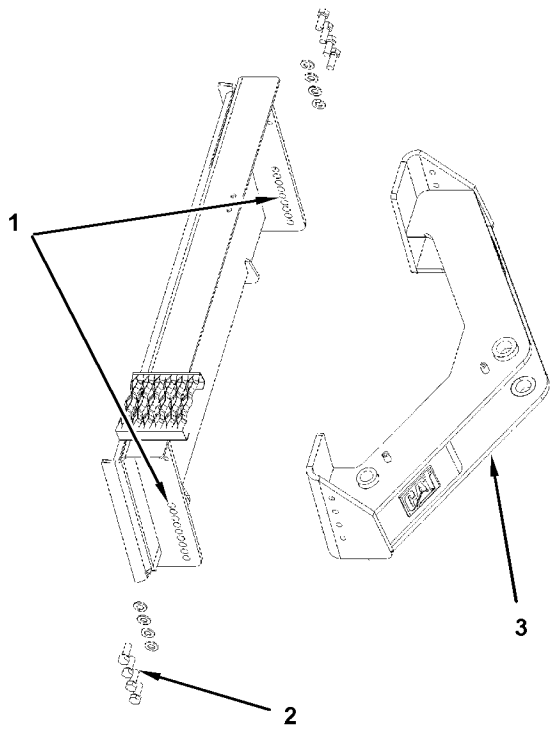

Illustration 372 g01161532

(1) Height Adjustment for the Frame
(2) Adjusting Bolts
(3) Frame

The height of the frame may be adjusted in order to compensate for the wear on the cutting edge. The front portion of the frame needs to be lowered as the cutting edge wears. Remove the bolts (2) and lower the frame (3). Install the bolts. This will keep the blade level with the ground and this will prevent the blade from digging into the ground.

Note: In order to properly adjust the blade, the work tool coupler needs to be vertical. The position of the pivot point of the blade is perpendicular to the ground. Follow this procedure in order to ensure that the cutting edge will remain flat on the ground during operation.

Trunnion Joint

Note: The trunnion is a dry joint. Adding grease to the trunnion simply attracts abrasive particles. The tightness of the joint should be monitored. Shims should be removed when the joint becomes too loose. This may be indicated by excessive movement in the blade.

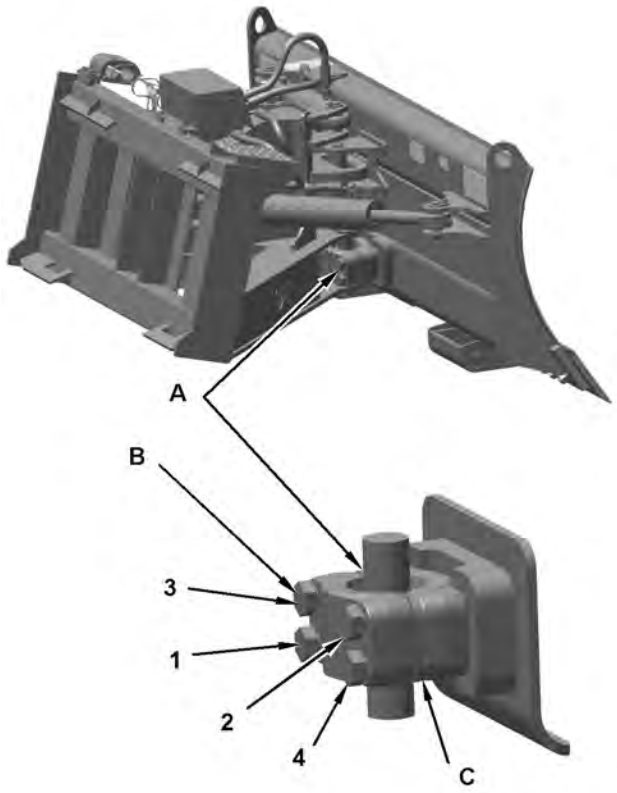

Illustration 373 g06393817

(A) Trunnion Joint
(B) Bolts
(C) Shims

- Remove the four retaining bolts (B) and the cap.
- Remove the necessary shims.
- Replace the cap and bolts.

- The tightening sequence is shown in illustration 373 .
- Torque the bolts to 530 ± 70 N·m (391 ± 52 lb ft).

Note: Some noise is typical and the noise does not indicate a problem.

i07638976

Bogie and Idler - Inspect/ Replace
(MTL Only)

SMCS Code: 4159-040; 4159-510; 4192-510; 4192-040

Inspect

Clean the undercarriage before inspecting the bogies and the idlers.

Inspect the bogies and idlers for damage and wear.

Note: Minor damage to the rubber on the bogies and idlers is acceptable. Minor damage includes nicks, cuts, small pieces that are missing, and small grooves. This minor damage is normal and acceptable. Minor damage will not adversely affect machine performance.

The bogies and the idlers should be replaced when the damage to the rubber wheels adversely affects machine performance. Replace the bogies and the idlers when the rubber is worn beyond the minimum specifications that are listed below.

Table 52

Bogie Wheels and Idler Wheels Wear Limits		
	Minimum Width	Minimum Thickness
254 mm (10 inch)	48 mm (1.9 inch)	3 mm (0.12 inch)
358 mm (14 inch)	48 mm (1.9 inch)	3 mm (0.12 inch)

Loosen the Track

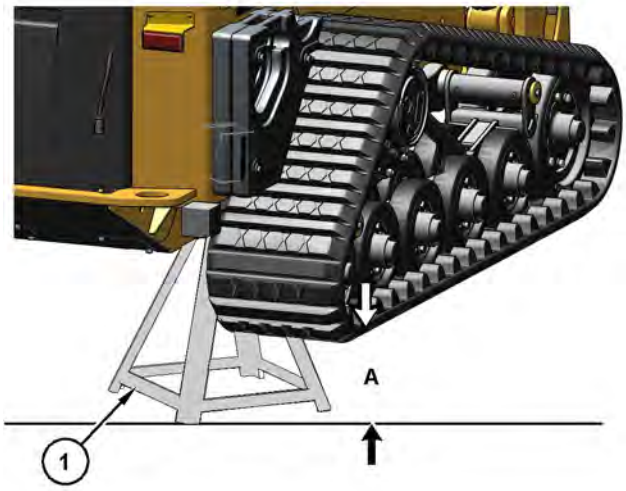

Illustration 374 g06385060

Use an appropriate floor jack in order to lift the machine off the ground. Use appropriate jack stands (1) in order to block up the machine. Raise the machine until tracks are approximately 50 mm (2.0 inches) (A) off the ground.

Loosen the track in order to work on the bogies and idlers. Refer to Operation and Maintenance Manual, “Track - Inspect/Adjust” for the procedure.

Note: The track may be removed in the illustrations for clarity.

Idler wheels

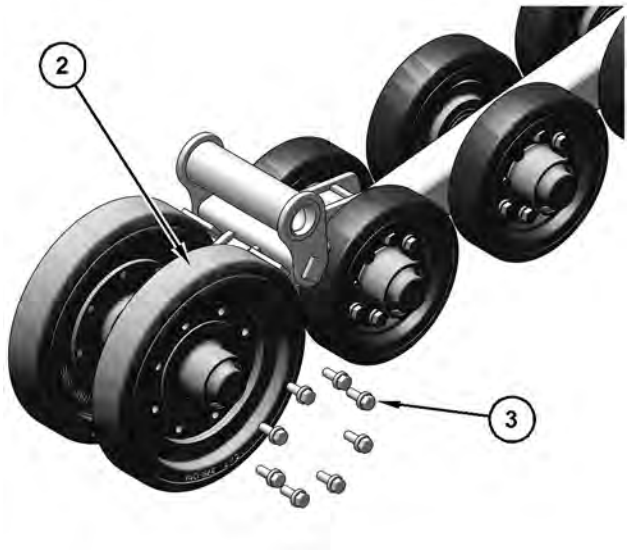

Illustration 375 g06383716

(2) Outer idler wheel
(3) Bolts and washers for the wheels

1. Remove the bolts (3) and the washers for the outer idler wheel (2).
2. Remove the outer idler wheel.
3. If necessary, remove the bolts and the washers for the inner idler wheel and remove the wheel.

4. Install the wheels. Tighten the bolts to a torque of 50 ± 5 N·m (37 ± 3.7 lb ft). Turn the bolts an additional 45 degrees ±5 degrees in the same star pattern.

Bogie wheels

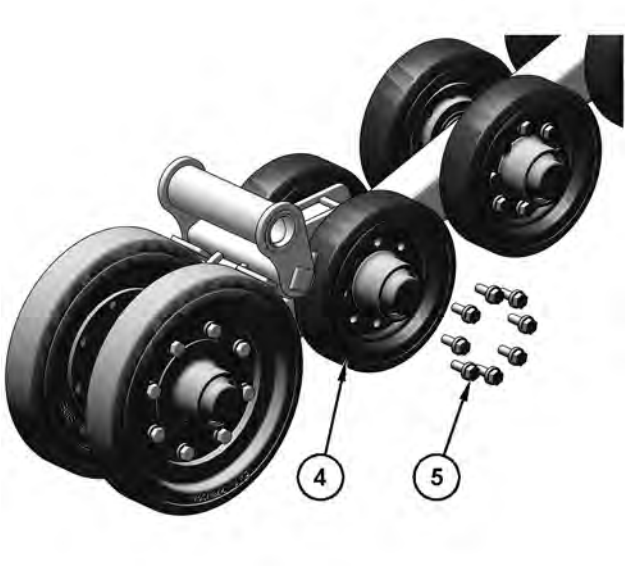

Illustration 376 g06383727

(4) Bogie Wheel
(5) Bolts and washers for the wheels

1. Remove the bolts (5) and the washers for the outer bogie wheel (4).
2. Remove the outer bogie wheel.
3. If necessary, remove the bolts and the washers for the inner bogie wheel and remove the wheel.
4. Install the wheels. Tighten the bolts to a torque of 150 ± 20 N·m (110 ± 15 lb ft).

i07331615

Bucket Cutting Edges - Inspect/Replace

SMCS Code: 6801-040; 6801-510

WARNING

Personal injury or death can result from bucket falling.

Block the bucket before changing bucket cutting edges.

Note: Check for bolts that are loose, damaged, or missing. Tighten loose bolts, and replace and tighten damage or missing bolts. Use caution with damage bolts. There is a chance of the bolts having sharp edges leading to an injury or laceration.

Note: The cutting edge may weigh as much as 50 kg (110 lb). Use assistance as needed.

1. Remove all combustible material from the bucket.
2. Lower the lift arms fully. Tilt back the bucket so the bucket cutting edge is accessible.
3. Place blocks under the raised edge of the bucket.
4. Clamp the cutting edge to the bucket.
5. Use a torch or cut-off wheel to remove the nuts.
6. Remove the bolts.
7. Carefully remove the clamps and cutting edge.
8. Clean the contact surfaces.
9. Use the opposite side of the cutting edge, if this side is not worn.
10. Install a new cutting edge, if both edges are worn.
11. Install the bolts.
12. Remove the blocks that are under the bucket.
13. After a few hours of operation, check the bolts for proper torque.

i01764331

Bucket Tips - Inspect/Replace

SMCS Code: 6805-040; 6805-510

WARNING

Personal injury or death can result from bucket falling.

Block the bucket before changing bucket cutting edges.

1. Lower the lift arms fully. Tilt back the bucket so that the bucket tips are accessible.
2. Place blocks under the raised edge of the bucket.
3. Remove the mounting bolts. Remove the bucket tips.
4. Clean the mounting surface.
5. Replace the bucket tips.
6. Install the bolts.
7. Remove the blocks that are under the bucket.

8. After a few hours of operation, check the bolts for proper torque.

i07638998

Cab Air Filter - Replace

SMCS Code: 7311-510; 7342-510

Fresh Air Filter

Note: The cover for the cab air filter is on the left-hand side of the machine behind the cab.

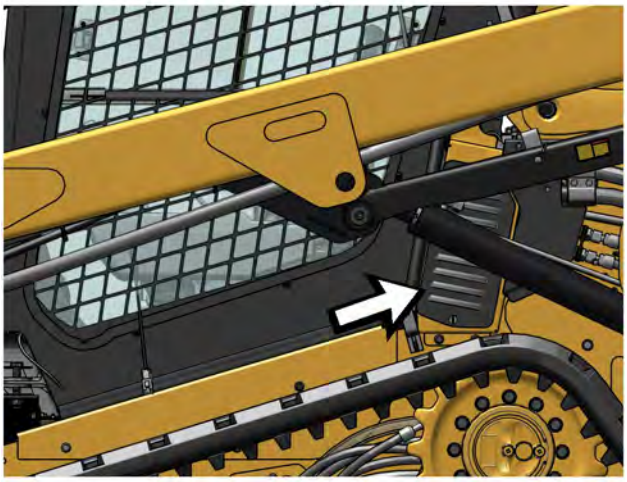

Illustration 377 g06383844

1. Rotate the latch to free the cover from the ductwork. Do NOT use excessive force. Lift on the cover and remove the cover.
2. Replace the element.
3. Reinstall the cover.

Recirculation Filter

Illustration 378 g06383845

1. Turn the thumb screws until the thumb screws are free from the duct. Remove the cover.
2. Replace the element if the element is damaged or if the element seal is damaged. Replace the element if the air conditioner performance is low.

Note: Do not use water for cleaning the filter.

3. Install the element. Replace the cover and tighten the thumb screws.

i07639183

Cab Air Filter - Clean/Replace (If Equipped)

SMCS Code: 7342-070; 7342-510

Fresh Air Filter

Note: The cover for the cab air filter is located on the left-hand side of the machine behind the cab.

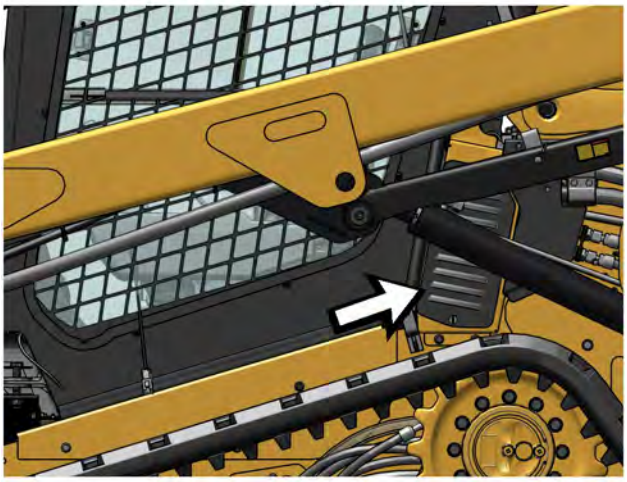

Illustration 379 g06383844

1. Rotate the latch to free the cover from the ductwork. Do NOT use excessive force. Lift up on the cover and remove the cover.
2. Remove the air filter element from the duct and clean the filter element with low-pressure air (maximum 207 kPa (30 psi)). Direct the air flow up the pleats and down the pleats from the side of the filter opposite of the air flow. Replace the element if the element is damaged or if the element seal is damaged. Replace the element if the air conditioner performance is low.

Note: Do not use water for cleaning the filter.

3. Install the element. Replace the cover and tighten the thumb screw.

Recirculation Filter

Illustration 380 g06383845

1. Turn the thumb screws until the thumb screws are free from the duct. Remove the cover.
2. Remove the air filter element from the duct and clean the filter element with low-pressure air (maximum 207 kPa (30 psi)). Direct the air flow up the pleats and down the pleats from the side of the filter opposite of the air flow. Replace the element if the element is damaged or if the element seal is damaged. Replace the element if the air conditioner performance is low.

Note: Do not use water for cleaning the filter.

3. Install the element. Replace the cover and tighten the thumb screws.

i07473555

Cab Interior - Clean

SMCS Code: 7301-070

The floor mat is removable. The floor mat has sides to help retain the material.

Illustration 381 g06331468

Floor mat in the cab

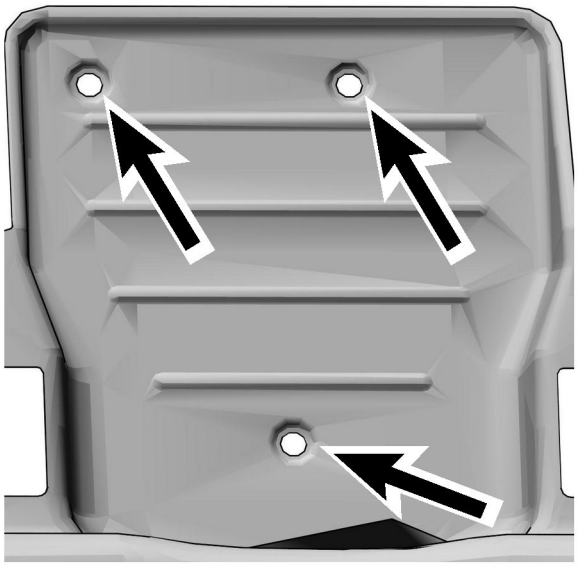

Illustration 382 g06331476

The drain on the rear and two drains on the front of the cab.

You can wash the floor of the cab with water. There are drains in front and one in the back of the floor of the cab

i08749210

Camera - Clean

SMCS Code: 7347-070; 7348-070

Prepare the machine for maintenance. Refer to Operation and Maintenance Manual , “Prepare the Machine for Maintenance".

If necessary, use a damp cloth to clean the glass of the camera. The camera is sealed. The camera is not affected by a wash with high-pressure spray.

Weather conditions such as dust, snow, ice, or rain may adversely affect the camera image on the display screen.

Note: When you access the cameras for cleaning, be sure to observe safe procedures for access. Maintain a three-point contact and/or use a safety harness.

Note: Alternatively, cameras may be cleaned from ground level by using a wash with a high-pressure spray or a damp rag on a wand.

i08761097

Cooling System Coolant (ELC) - Change

SMCS Code: 1395-044-NL

WARNING

Pressurized system: Hot coolant can cause serious burn. To open cap, stop engine, wait until radiator is cool. Then loosen cap slowly to relieve the pressure.

NOTICE

Mixing ELC with other products will reduce the effectiveness of the coolant.

This could result in damage to cooling system components.

If Caterpillar products are not available and commercial products must be used, make sure they have passed the Caterpillar EC-1 specification for premixed or concentrate coolants and Caterpillar Extender.

NOTICE
Care must be taken to ensure that fluids are contained during performance of inspection, maintenance, testing, adjusting, and repair of the product. Be prepared to collect the fluid with suitable containers before opening any compartment or disassembling any component containing fluids.

Refer to Special Publication, PERJ1017, “Dealer Service Tool Catalog” for tools and supplies suitable to collect and contain fluids on Cat ® products.

Dispose of all fluids according to local regulations and mandates.

Note: The machine was shipped from the factory with Extended Life Coolant (ELC) in the cooling system.

For information about the addition of Extender to your cooling system, see the Operation and Maintenance Manual, “Cooling System Coolant (ELC) Extender - Add” or consult your Cat dealer.

Drain the coolant whenever the coolant is dirty or whenever the coolant is foaming.

The radiator cap is located under the radiator guard on the top of the engine compartment.

Allow the machine to cool before you change the coolant.

1. Prepare the machine for maintenance. Refer to Operation and Maintenance Manual , “Prepare the Machine for Maintenance".

2. Open the engine access door and raise the radiator guard. Refer to Operation and Maintenance Manual, “Access Doors and Covers”.

Note: Radiator cap is located either on the left side of the radiator (C3.3B and C3.8 engines) or the right side of the radiator (C2.2 engine).

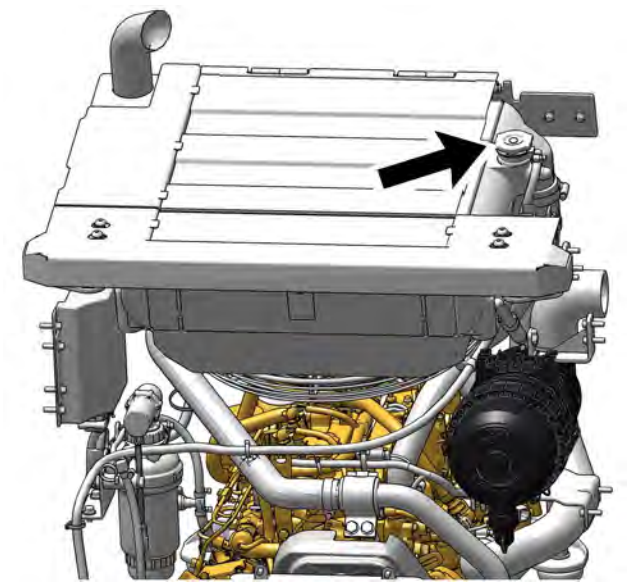

Illustration 383 g06384534
C2.2

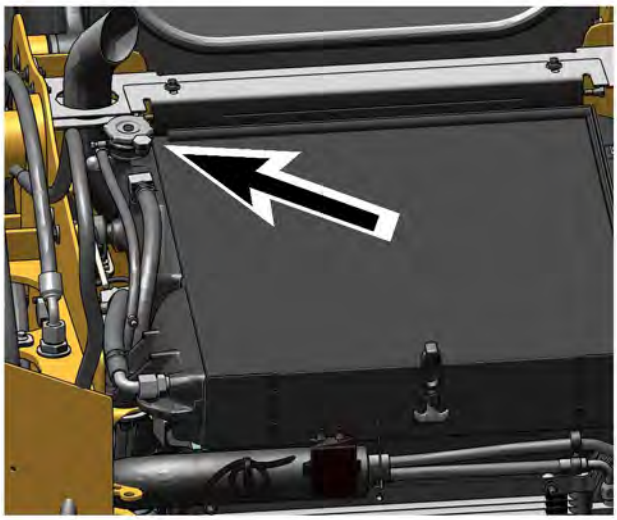

Illustration 384 g06331356
C3.3B and C3.8

3. Slowly loosen the radiator cap to relieve system pressure. Remove the radiator cap.

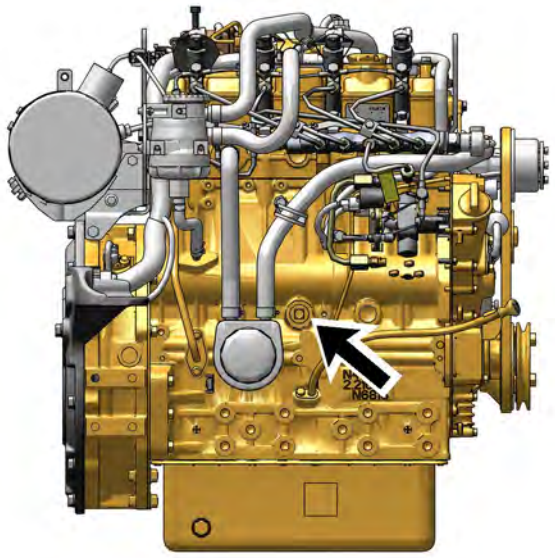

Illustration 385 g06384548
Coolant Drain (C2.2)

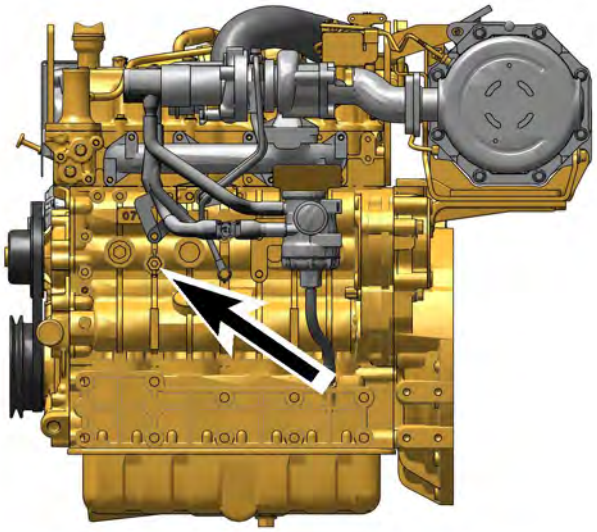

Illustration 386 g06331440
Coolant drain (C3.3B)

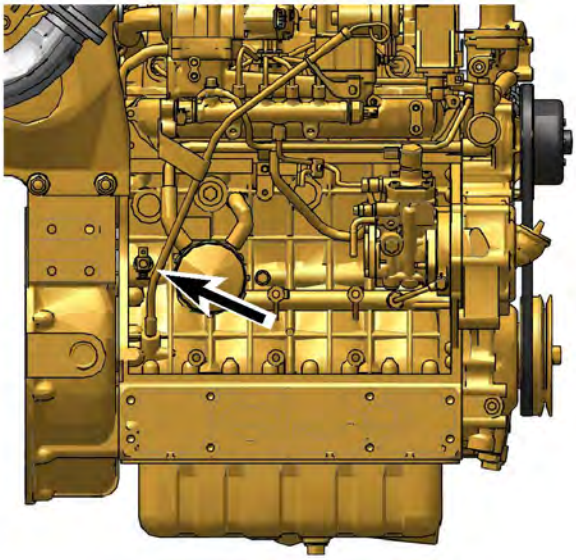

Illustration 387 g06331446
Coolant drain (C3.8)

4. Locate the drain for the coolant system on the left side of the C3.8 engine by the oil filter. Locate the drain for the coolant on the right side for the C3.3B engine. Use the attached drain hose on the valve.

Illustration 388 g06330418

5. Remove the access panel under the rear of the machine. Pull the drain hose through the access hole.
6. Open the drain and allow the coolant to drain into a suitable container.
7. Close the drain.
8. Push the hose back into the engine compartment. Replace the access panel.
9. Replace the thermostat. See Operation and Maintenance Manual, “Cooling System Water Temperature Regulator - Replace” for the process for replacing the thermostat.
10. Add the coolant solution directly to the radiator. Do not use the coolant overflow reservoir as a filler for the coolant. Refer to Operation and Maintenance Manual, “Capacities - (Refill)”. Refer to Special Publication, SEBU6250, “Caterpillar Machine Fluids Recommendations”.

Note: Premix the coolant solution before filling the cooling system. The coolant solution should contain 50 percent coolant and 50 percent distilled water.

Note: Add the coolant solution at a maximum rate of 5 L/min. The chance of trapping air inside the engine block will be reduced. A large amount of trapped air can cause localized heating to occur upon start-up. Localized heating may result in engine damage, which may lead to failure of the engine.

11. Start the engine. Run the engine without the radiator cap until the thermostat opens and the coolant level stabilizes. If necessary, add coolant.

Note: The sight gauge for the coolant level is located near the radiator cap.

12. Check the coolant level in the sight gauge on the radiator. Maintain the coolant level to the top of the sight gauge with the radiator in the LOWERED position.
13. Stop the engine. Inspect the radiator cap and the gasket. Replace the cap if the cap or the gasket is damaged. Install the radiator cap.
14. Pull the radiator guard downward.
15. Close the engine access door.

i08761471

Cooling System Coolant Extender (ELC) - Add

SMCS Code: 1352-544-NL

WARNING

Pressurized system: Hot coolant can cause serious burn. To open cap, stop engine, wait until radiator is cool. Then loosen cap slowly to relieve the pressure.

When a Cat Extended Life Coolant is used, an extender must be added to the cooling system periodically.

1. Prepare the machine for maintenance. Refer to Operation and Maintenance Manual , “Prepare the Machine for Maintenance".
2. Open the engine access door and raise the radiator guard. Refer to Operation and Maintenance Manual, “Access Doors and Covers”.

Note: The radiator cap may be located either on the left side of the radiator (C3.3B and C3.8 engines) or the right side of the radiator (C2.2 engine).

Illustration 389 g06331356
C3.3B and C3.8

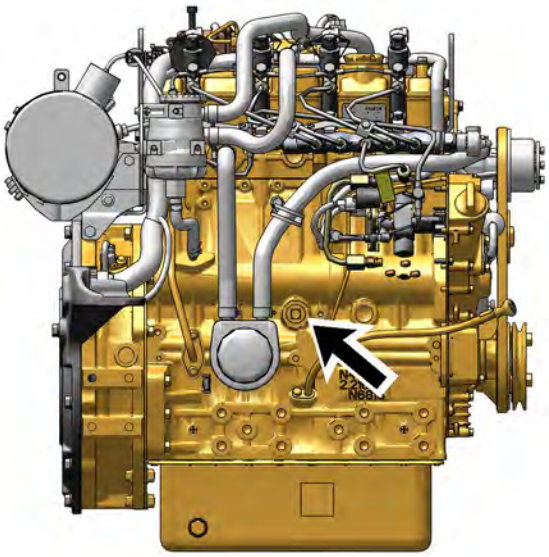

Illustration 391 g06384548
Coolant Drain (C2.2)

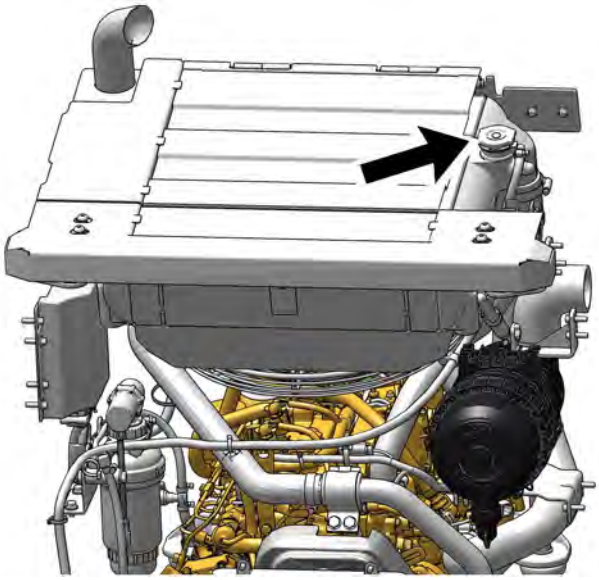

Illustration 390 g06384534
C2.2

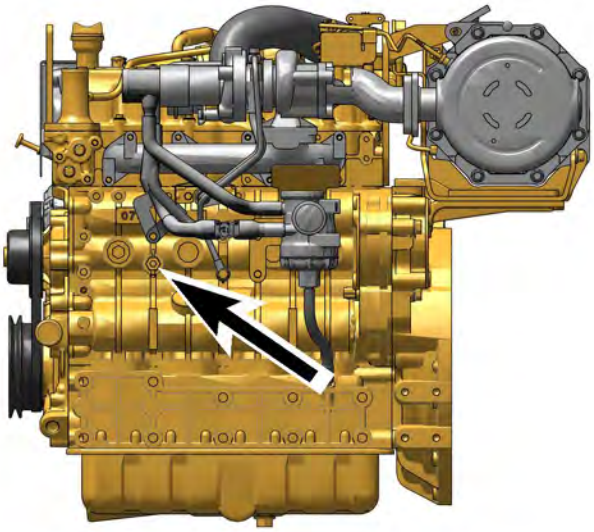

Illustration 392 g06331440
Coolant drain (C3.3B)

3. Slowly loosen the radiator cap to relieve system pressure. Remove the radiator cap.

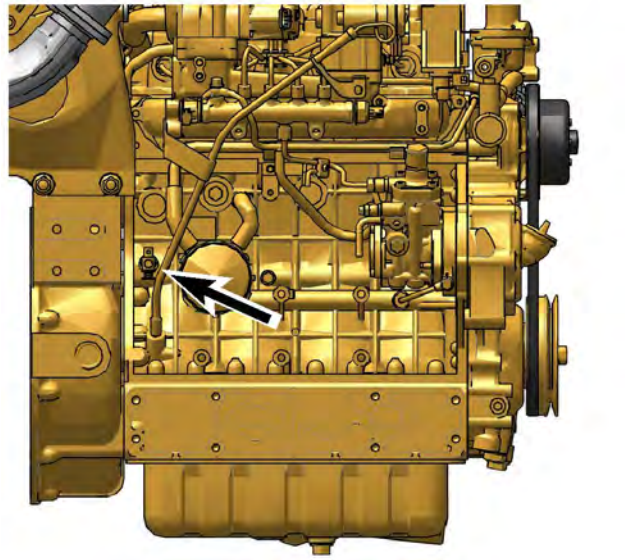

Illustration 393 g06331446

4. If necessary, drain enough coolant from the radiator to allow the addition of the coolant additive.
5. Add 0.17 L (0.18 qt) of cooling system additive.
6. Inspect the radiator cap and the gasket. If the cap or the gasket is damaged, replace the cap. Install the radiator cap.
7. Check the coolant level in the sight gauge on the radiator. Maintain the coolant level to the top of the sight gauge with the radiator in the LOWERED position.
8. Add the extender directly to the radiator. Do not use the coolant overflow reservoir as a filler for the extender.
9. Tilt the radiator guard downward.
10. Close the engine access door.

For additional information on the addition of extender, see Special Publication, SEBU6250, “Caterpillar Machine Fluids Recommendations”.

i07716982

Cooling System Coolant Sample - Obtain

SMCS Code: 1350-008; 1350-554-SM; 1350; 1352-008; 1352; 1395-008; 1395-554; 1395; 7542; 7542-008

NOTICE
Care must be taken to ensure that fluids are contained during performance of inspection, maintenance, testing, adjusting, and repair of the product. Be prepared to collect the fluid with suitable containers before opening any compartment or disassembling any component containing fluids.

Refer to Special Publication, PERJ1017, “Dealer Service Tool Catalog” for tools and supplies suitable to collect and contain fluids on Cat ® products.

Dispose of all fluids according to local regulations and mandates.

Testing the engine coolant is important to ensure that the engine is protected from internal cavitation and corrosion. The analysis also tests the ability of the coolant to protect the engine from boiling and freezing. S·O·S coolant analysis can be done at your Cat dealer. Caterpillar S·O·S coolant analysis is the best way to monitor the condition of your coolant and your cooling system. S·O·S coolant analysis is a program that is based on periodic samples.

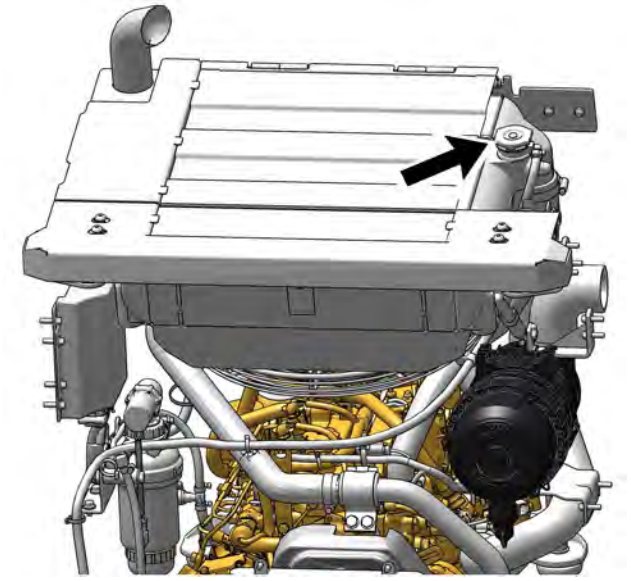

Illustration 394 g06383860
C2.2

Illustration 395 g06331356

C3.3 and C3.8

Obtain the sample of the coolant as close as possible to the recommended sampling interval. To receive the full effect of S·O·S analysis, establish a consistent trend of data. To establish a pertinent history of data, perform consistent samplings that are evenly spaced. Supplies for collecting samples can be obtained from your Cat dealer.

Use the following guidelines for proper sampling of the coolant:

- Complete the information on the label for the sampling bottle before you begin to take the samples.
- Keep the unused sampling bottles stored in plastic bags.
- Obtain coolant samples directly from the coolant sample port. You should not obtain the samples from any other location.
- Keep the lids on empty sampling bottles until you are ready to collect the sample.
- Place the sample in the mailing tube immediately after obtaining the sample to avoid contamination.
- Never collect samples from expansion bottles.
- Never collect samples from the drain for a system.

Submit the sample for Level 1 analysis.

For additional information about coolant analysis, see Special Publication, SEBU6250, “Caterpillar Machine Fluids Recommendations” or consult your Cat dealer.

New Systems, Refilled Systems, and Converted Systems

Perform an S·O·S coolant analysis (Level 2) at the following maintenance intervals.

- Every Year
- Initial 500 service hours

Perform this analysis at the interval that occurs first for new systems, for refilled systems, or for converted systems that use Cat ELC (Extended Life Coolant) or use Cat DEAC (Diesel Engine Antifreeze/Coolant). This 500-hour check will also check for any residual cleaner that may have contaminated the system.

Recommended Interval for S·O·S Services Coolant Sample

The following table contains the recommended sampling interval for all coolants that meet Cat EC-1 (Engine Coolant specification - 1). This is also the recommended sampling interval for all conventional heavy-duty coolant/antifreeze.

The Level 2 Coolant Analysis should be performed if a problem is suspected or identified.

Table 53

Recommended Interval		
Type of Coolant	**Level 1**	**Level 2**
Cat DEAC and Conventional Heavy-Duty Coolants	Every 250 hours	Yearly
Cat ELC and Commercial EC-1 coolants	Optional	Yearly

Note: Check the SCA (Supplemental Coolant Additive) of the conventional coolant at every oil change or at every 250 hours. Perform this check at the interval that occurs first.

S·O·S Services Coolant Analysis (Level 1)

A coolant analysis (Level 1) is a test of the properties of the coolant.

The following properties of the coolant are tested:

- Glycol concentration for freeze protection and boil protection
- Ability to protect from erosion and corrosion
- pH

- Conductivity
- Visual analysis
- Odor analysis

The results are reported, and appropriate recommendations are made.

S·O·S Services Coolant Analysis (Level 2)

A coolant analysis (Level 2) is a comprehensive chemical evaluation of the coolant. This analysis is also a check of the overall condition of the cooling system.

The S·O·S coolant analysis (Level 2) has the following features:

- Full coolant analysis (Level 1)
- Identification of metal corrosion and of contaminants
- Identification of buildup of the impurities that cause corrosion
- Identification of buildup of the impurities that cause scaling
- Determination of the possibility of electrolysis within the cooling system of the engine

The results are reported, and appropriate recommendations are made.

For more information on S·O·S coolant analysis, consult your Caterpillar dealer.

i08466307

Cooling System Level - Check

SMCS Code: 1350-535-FLV; 1350-040-HX; 1382-510; 1382-070

WARNING

Pressurized system: Hot coolant can cause serious burn. To open cap, stop engine, wait until radiator is cool. Then loosen cap slowly to relieve the pressure.

1. Open the engine access door and raise the radiator guard. Refer to Operation and Maintenance Manual, “Access Doors and Covers”.

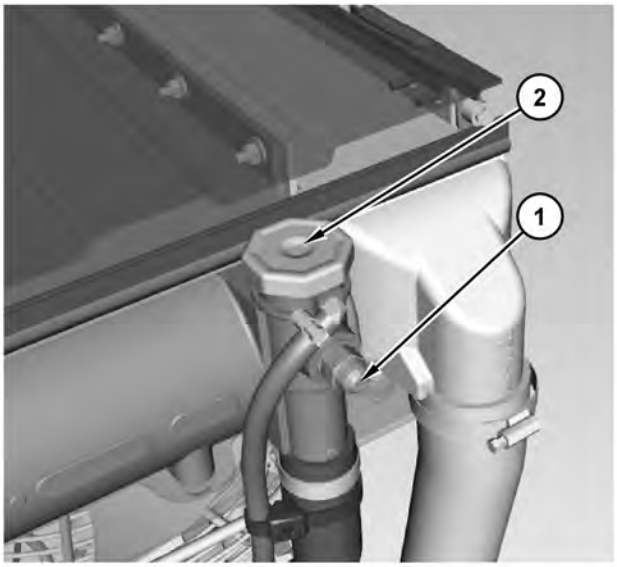

Illustration 396 g03821017

Typical Example

(1) Sight Gauge
(2) Radiator Cap

2. Check the coolant level in the sight gauge (1) on the radiator. Maintain the coolant level to the top of the sight gauge with the radiator in the LOWERED position. If you need to add coolant, add the coolant directly to the radiator. Remove the radiator cap (2) slowly to relieve system pressure.

Note: The radiator cap may be located either on the left side of the radiator (C3.3B and C3.8 engines) or the right side of the radiator (C2.2 engine).

3. Inspect the radiator cap and the gasket. Replace the cap if the cap or the gasket is damaged. Install the radiator cap.
4. Tilt the radiator guard downward.

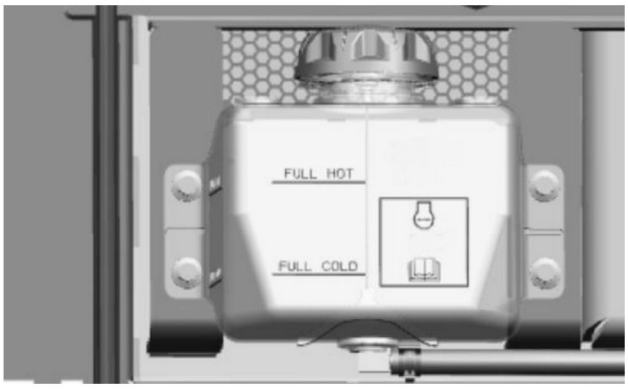

Illustration 397 g06673600

5. The coolant reservoir is on the left-hand side of the engine bay or on the back of the engine compartment door. Maintain the coolant level in the coolant overflow reservoir between the “FULL Cold” and “FULL HOT” lines.
6. Close the engine access door.

i08247416

Diesel Exhaust Fluid - Fill
(C3.8 Engines only)

SMCS Code: 108K-544

S/N: B621–Up

S/N: GJ21–Up

S/N: HX21–Up

S/N: L321–Up

S/N: JX31–Up

S/N: LB31–Up

S/N: R231–Up

S/N: TY31–Up

S/N: TY41–Up

S/N: TY61–Up

S/N: S381–Up

S/N: AN91–Up

S/N: BX91–Up

S/N: CY91–Up

S/N: DY91–Up

S/N: GX91–Up

S/N: TP91–Up

S/N: S1L1–Up

S/N: P3R1–Up

S/N: XES1–Up

NOTICE
Care must be taken to ensure that fluids are contained during performance of inspection, maintenance, testing, adjusting, and repair of the machine. Be prepared to collect the fluid with suitable containers before opening any compartment or disassembling any component containing fluids.

Dispose of all fluids according to local regulations and mandates.

Reference: See “Capacities (Refill)“ for the capacity of the DEF tank for your machine.

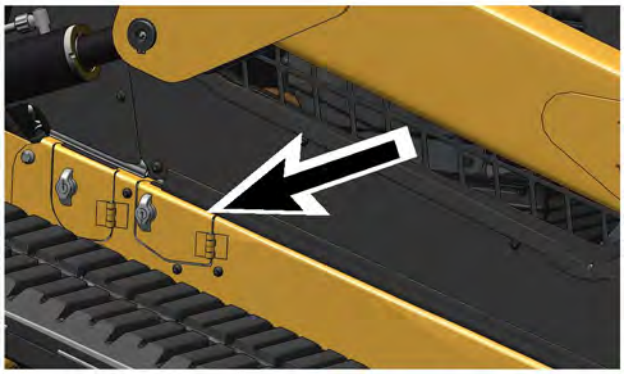

Illustration 398 g06331305
DEF Filler Cap Location

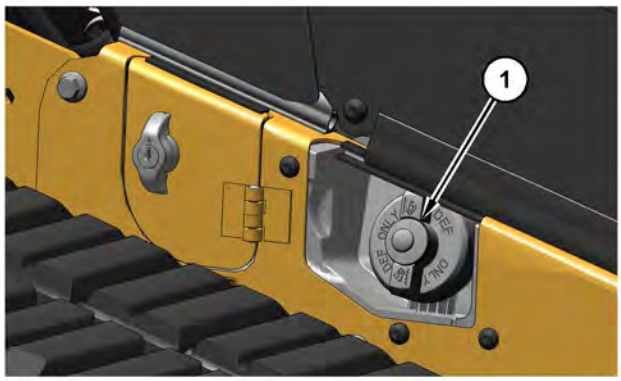

Illustration 399 g06331319
(1) DEF Tank Filler Cap

1. Clean blue DEF tank filler cap (1) and the surrounding area.
2. Remove the blue DEF tank filler cap (1).
3. Fill the tank with diesel exhaust fluid (DEF).

Note: Do not fill the DEF tank from a contaminated container or funnel.

Note: Do not over fill the tank. DEF can freeze and needs room for expansion.

4. Install the blue DEF tank filler cap (1).

Refer to “Lubricant Viscosities“ for more information on diesel exhaust fluid (DEF) guidelines.

i08247476

Diesel Exhaust Fluid Filter - Replace
(C3.8 Engines Only)

SMCS Code: 108K-510-FI; 108K-544

S/N: B621–Up

S/N: GJ21–Up

S/N: HX21–Up

S/N: L321–Up

S/N: JX31–Up

S/N: LB31–Up

S/N: R231–Up

S/N: TY31–Up

S/N: TY41–Up

S/N: TY61–Up

S/N: S381–Up

S/N: AN91–Up

S/N: BX91–Up

S/N: CY91–Up

S/N: DY91–Up

S/N: GX91–Up

S/N: TP91–Up

S/N: S1L1–Up

S/N: P3R1–Up

S/N: XES1–Up

NOTICE
Ensure that the engine is stopped before any servicing or repair is performed.

NOTICE
Care must be taken to ensure that fluids are contained during performance of inspection, maintenance, testing, adjusting, and repair of the product. Be prepared to collect the fluid with suitable containers before opening any compartment or disassembling any component containing fluids.

Refer to Special Publication, NENG2500, “Cat Dealer Service Tool Catalog” or refer to Special Publication, PECJ0003, “Cat Shop Supplies and Tools Catalog” for tools and supplies suitable to collect and contain fluids on Cat products.

Dispose of all fluids according to local regulations and mandates.

1. The DEF filter is on the left side of the machine under the cab. Tilt the cab upward. Refer to the Maintenance Section, “Cab Tilting” for the procedure.

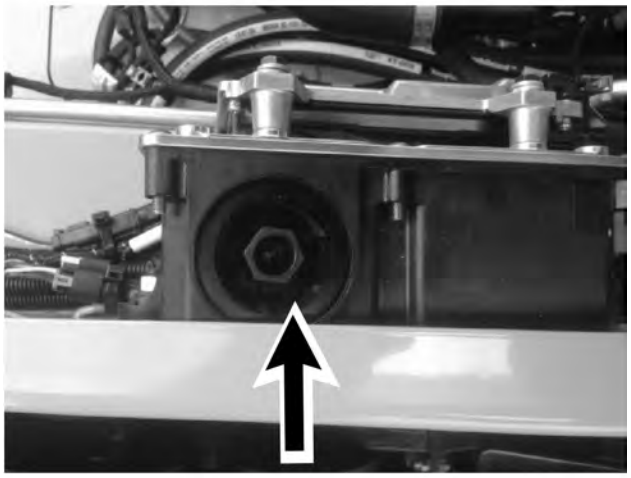

Illustration 400 g03821620

2. Remove the black plastic cover and then diesel exhaust fluid (DEF) filter assembly, which is shown.

3. Install new DEF filter. Replace DEF filter cap.

4. Tilt the cab downward. Refer to Maintenance Section, “Cab Tilting” for the procedure.

i08247655

Diesel Particulate Filter - Clean/Replace

(EU Stage V Engines Only)

SMCS Code: 108F-510; 108F-070; 1091-510; 1091-070

S/N: B621–Up

S/N: L321–Up

S/N: JX31–Up

S/N: R231–Up

S/N: TP31–Up

S/N: TY31–Up

S/N: GK61–Up

S/N: ME61–Up

S/N: PF61–Up

S/N: TY61–Up

S/N: S381–Up

S/N: BT91–Up

S/N: GX91–Up

S/N: TE91–Up

S/N: S7E1–Up

S/N: W6E1–Up

S/N: Z9E1–Up

S/N: S1L1–Up

S/N: P3R1–Up

S/N: T9X1–Up

S/N: T7Z1–Up

The service interval for these models is governed by standards unique to EU Stage V requirements. Refer to this Operation and Maintenance Manual, “EU Stage V Emissions Control System” for additional information.

i08247678

Diesel Particulate Filter - Clean/Replace

(Tier 4 Final & EU Stage V Engines Only)

SMCS Code: 108F-510; 108F-070; 1091-510; 1091-070

S/N: B621–Up

S/N: GJ21–Up

S/N: HX21–Up

S/N: L321–Up

S/N: ZB21–Up

S/N: JX31–Up

S/N: LB31–Up

S/N: R231–Up

S/N: TP31–Up

S/N: TY31–Up

S/N: TP41–Up

S/N: TY41–Up

S/N: EK51–Up

S/N: GJ51–Up

S/N: WS51–Up

S/N: GK61–Up

S/N: KC61–Up

S/N: ME61–Up

S/N: PF61–Up

S/N: TY61–Up

S/N: S381–Up

S/N: AN91–Up

S/N: BT91–Up

S/N: BX91–Up

S/N: CW91–Up

S/N: CY91–Up

S/N: DY91–Up

S/N: GX91–Up

S/N: JX91–Up

S/N: RB91–Up

S/N: TE91–Up

S/N: TP91–Up

S/N: T8A1–Up

S/N: WKD1–Up

S/N: S7E1–Up

S/N: W6E1–Up

S/N: Z9E1–Up

S/N: RWK1–Up

S/N: KXL1–Up

S/N: S1L1–Up

S/N: P3R1–Up

S/N: K5S1–Up

S/N: XES1–Up

S/N: HSX1–Up

S/N: T9X1–Up

S/N: KEZ1–Up

S/N: T7Z1–Up

S/N: T9Z1–Up

Consult your Cat dealer when the Diesel Particulate Filter (DPF) needs to be cleaned. An Aftertreatment Regeneration Frequency code will occur when the DPF requires servicing.

The approved Caterpillar DPF maintenance procedure requires that one of the following actions is taken when the DPF needs to be cleaned:

- The DPF from your machine can be replaced with a new DPF
- The DPF from your machine can be replaced with a remanufactured DPF if the product offering exists for your engine.
- The DPF from your machine can be cleaned by your local authorized Cat dealer, or a Caterpillar approved DPF cleaning machine, and reinstalled

Note: A manual regeneration via Cat Electronic Technician must be performed before removing a DPF that will be cleaned. The scenarios listed above may require a DPF service indicator reset via Cat Electronic Technician. Your Cat dealer will perform this as part of the DPF service.

i07470025

Drive Chain Case Oil - Change
(SSL Only)

SMCS Code: 3261-544-OC; 3261-543-OC

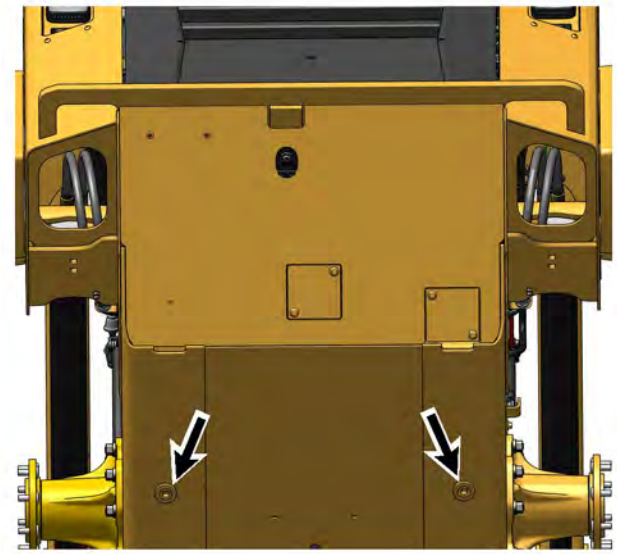

Illustration 401 g06331021

The plugs for the drive chain cases as the plugs are viewed from the underside of the machine.

1. Remove the drain plug for the left drive chain case and the right drive chain case. Allow the oil to drain into a suitable container.
2. Apply 169-5464 Quick Cure Primer and 5P-3413 Pipe Sealant to the threads on the drain plugs. Install the drain plugs.

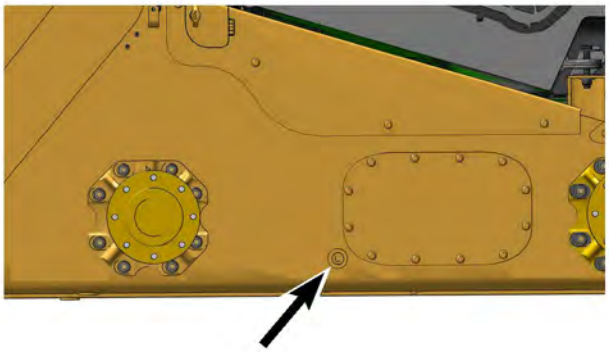

Illustration 402 g06331004

3. Remove the filler plug for the right side drive chain case. Fill the drive chain case with oil to the bottom of the threads on the fill port. Refer to Operation and Maintenance Manual, “Lubricant Viscosities” and Operation and Maintenance Manual, “Refill Capacities”.
4. Apply 169-5464 Quick Cure Primer and 5P-3413 Pipe Sealant to the threads on the filler plug. Install the filler plug.
5. Repeat the process for the left side drive chain case.

i07469867

Drive Chain Case Oil - Check
(SSL Only)

SMCS Code: 3261-535

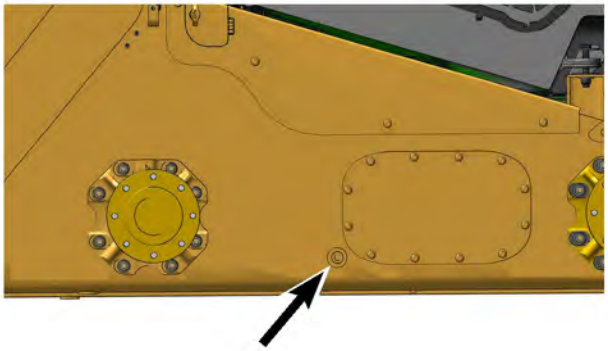

Illustration 403 g06331004

1. Remove the filler plug for the right side drive chain case. The oil level should be at the bottom of the threads on the fill port. If necessary, refer to Operation and Maintenance Manual, “Drive Chain Case Oil - Change” for the proper procedure to add oil.
2. Apply 169-5464 Quick Cure Primer and 5P-3413 Pipe Sealant to the threads on the filler plug. Install the filler plug.
3. Repeat the process for the left side drive chain case.

i07469213

Drive Chain Tension - Check/ Adjust
(SSL Only)

SMCS Code: 3261-025; 3261-535

Note: Steel tracks that go over the tires should only be used with pneumatic tires. When steel tracks go over tires or any drive train device except tires, the interval for checking the drive chains should be reduced to every 100 Service Hours. The use of rubber tracks that go over the tires is not recommended.

Note: There are four drive chains on the skid steer loader that must be checked and adjusted.

1. Park the machine on level ground and stable ground.

2. Use appropriate floor jacks to lift the machine off the ground.

Illustration 404 g06330848

3. Rotate the front wheel forward and backward. Measure the total free play (A). Repeat the process for the rear wheel.

Note: If the total free play (A) does not exceed 15 mm (0.6 inch), the chain tension does not need further inspection. If the total free play exceeds 15 mm (0.6 inch), you should continue with the inspection.

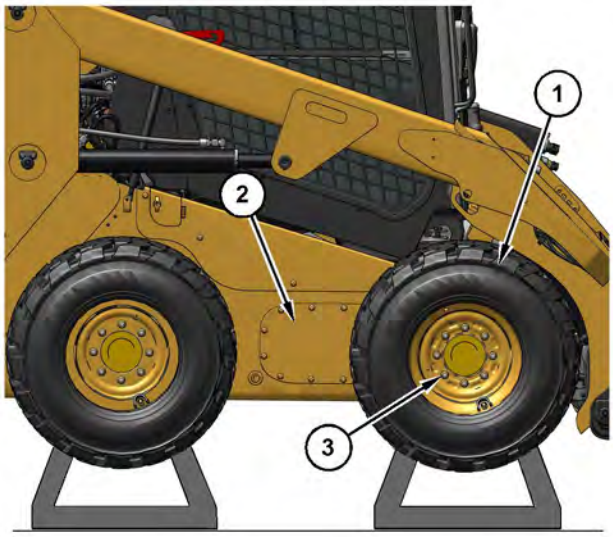

Illustration 405 g06330850

4. Remove the wheel nuts (3). Use an appropriate nylon lifting strap and a hoist to remove the tire and rim (1). The weight of the standard tire and rim is 51 kg (113 lb).

5. Remove bolts and the cover (2) for the drive chain case.

Note: Remove the sealant from the cover and from the machine.

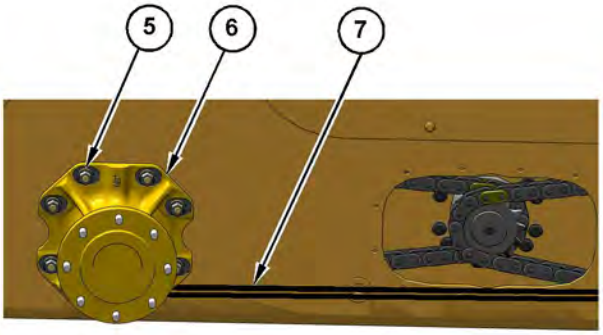

Illustration 406 g06330875

6. Loosen the eight bolts (5) for the axle housing. Place the chain tension adjuster (7) between the axle housings (6).

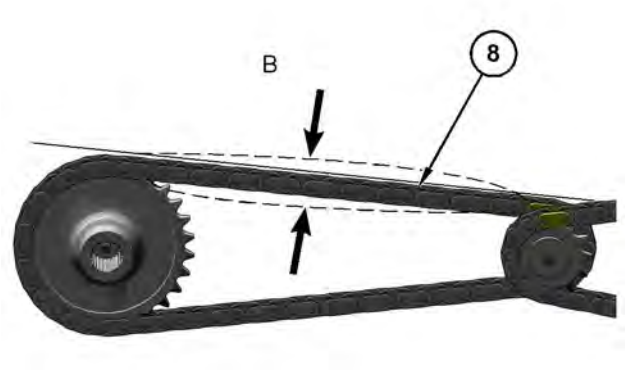

Illustration 407 g06405662

7. Rotate the axle to ensure that the chain (8) is taut below the sprockets. Place a straight edge across the top of the sprockets. Measure the total amount of movement in the chain (B). Set the chain tension so that there is a total of 15 mm (0.6 inch) movement in the chain. This movement is equal to 7.5 mm (0.3 inch) of movement above the straight edge and 7.5 mm (0.3 inch) of movement below the straight edge.

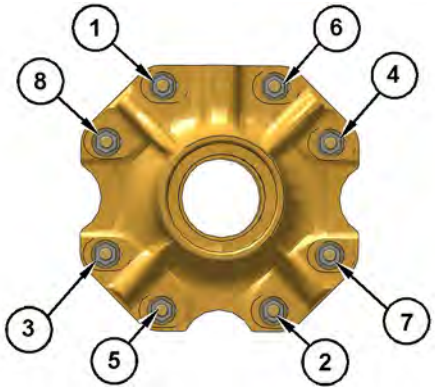

Illustration 408 g06330903

8. Torque the nuts for the axle housing in the order that is shown above to 160 ± 15 N·m (118 ± 11 lb ft). Turn an extra 60° ±5° in the same order.

9. Remove the chain tension adjuster.

10. Install the bolts and the cover for the drive chain case.

Note: Use 8T-9022 Silicone Gasket to seal the cover to the machine.

11. Use an appropriate nylon lifting strap and a hoist to position the tire and rim to the axle. The weight of the tire and rim is 51 kg (113 lb). Refer to Operation and Maintenance Manual, “Wheel Nuts - Tighten” for the procedure to tighten the wheel nuts.

12. Repeat the procedure on the opposite side of the machine if necessary.

13. Lower the machine to the ground.

i07655206

Drive Line Wear Sleeve - Inspect/Replace
(MTL Only)

SMCS Code: 3154-510; 3154-040

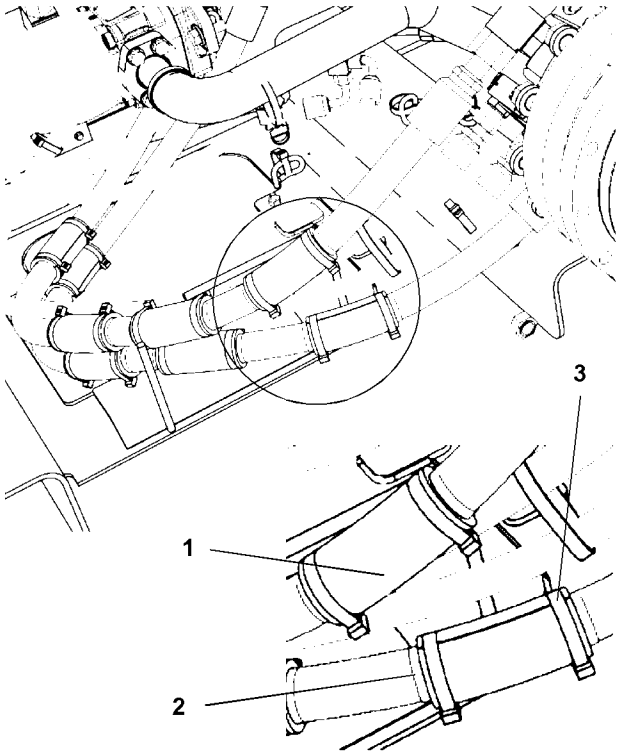

Illustration 409 g06040640

(1) Wear Sleeve
(2) Friction Tape
(3) Tie Strap

1. Cut both tie straps and remove the worn wear sleeve.

2. Install a new wear sleeve onto the hose in the same location. Use the grip tape on the hose as a guide. Replace the grip tape as needed. The sleeve should fall where the hose assembly makes contact with metal frame members or other hoses.
3. Secure the wear sleeve using two tie straps.

i07639225

Engine Air Filter Primary Element - Clean/Replace

SMCS Code: 1054-510-PY; 1054-070-PY

WARNING

Personal injury can result from air pressure.

Personal injury can result without following proper procedure. When using pressure air, wear a protective face shield and protective clothing.

Maximum air pressure at the nozzle must be less than 205 kPa (30 psi) for cleaning purposes.

NOTICE
Never service the air cleaner when the engine is running, to avoid engine damage.

NOTICE
Caterpillar recommends certified air filter cleaning services that are available at Cat dealers. The Cat cleaning process uses proven procedures to assure consistent quality and sufficient filter life.

Observe the following guidelines if you attempt to clean the filter element:

Do not tap or strike the filter element in order to remove dust.

Do not wash the filter element.

Use low pressure compressed air in order to remove the dust from the filter element. Air pressure must not exceed 207 kPa (30 psi). Direct the air flow up the pleats and down the pleats from the inside of the filter element. Take extreme care in order to avoid damage to the pleats.

Do not use air filters with damaged pleats, gaskets, or seals. Dirt entering the engine will cause damage to engine components.

Service the air filter elements when the alert indicator for air filter restriction lights. Refer to Operation and Maintenance Manual, “Alert Indicators” for information about the indicator.

Clean

The primary filter element can be used up to three times if the element is properly cleaned and if the element is properly inspected. When the primary filter element is cleaned, check for rips or tears in the filter material. The primary filter element should be replaced at least one time per year. This replacement should be performed regardless of the number of cleanings.

1. Open the engine access door.
2. The air filter housing is located on the right side of the engine compartment.

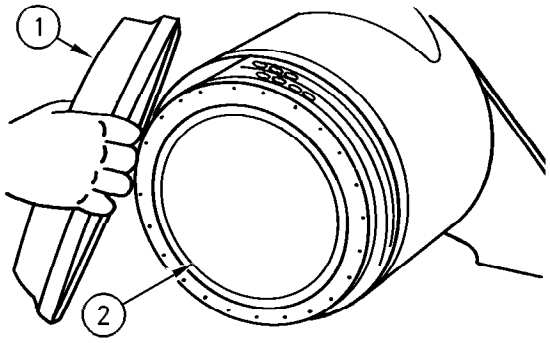

Illustration 410 g00101864

3. Unlatch the air cleaner housing cover (1). Rotate the cover counterclockwise and remove the cover.
4. Remove the primary filter element (2).
5. If appropriate, clean the primary filter element. Use air pressure to clean the primary filter elements. Pressurized air will not remove deposits of carbon and oil. Use filtered, dry air with a maximum pressure of 207 kPa (30 psi).

Note: When the primary filter elements are cleaned, always begin with the inside to force dirt particles toward the outside. Aim the hose so that the air flows inside the element along the length of the filter to help prevent damage to the paper pleats. Do not aim the stream of air directly at the primary filter element.

6. Inspect the cleaned, dry primary air filter element. Use a 60 watt blue light in a dark room or in a similar facility. Place the blue light in the primary air filter element. Rotate the primary air filter element. Inspect the primary air filter element for tears and/or holes. Inspect the primary air filter element for light that may show through the filter material. If necessary to confirm the result, compare the primary air filter element to a new primary air filter element that has the same part number.

Note: Do not use a primary air filter element that has any tears and/or holes in the filter material. Do not use a primary air filter element with damaged pleats, gaskets, or seals. Discard damaged primary air filter elements.

7. Clean the insideof the air cleaner housing with a damp cloth. Do not use compressed air to clean the housing.

8. Install the primary filter element into the filter housing.

9. Install the cover for the filter housing.

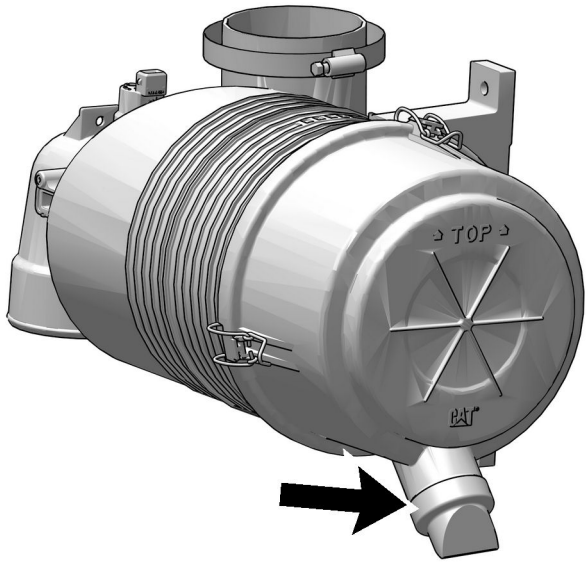

Illustration 411 g06383879

10. Rotate the cover clockwise and latch the cover.

Note: Make sure that the cover is properly positioned.

11. Close the engine access door.

12. Start the engine. The alert indicator for air filter restriction should turn off. If the alert indicator continues to light, replace the secondary air filter. Refer to Operation and Maintenance Manual, “Engine Air Filter Secondary Element - Replace”.

Replace

The primary filter element should be replaced at least one time per year. **You can clean the primary filter up to three times.**

1. Open the engine access door.

2. The air filter housing is located on the right side of the engine compartment.

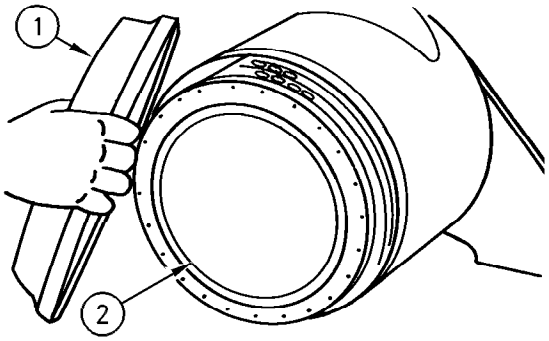

Illustration 412 g00101864

3. Unlatch the air cleaner housing cover (1). Rotate the cover counterclockwise and remove the cover.

4. Remove the primary filter element (2).

5. Clean the insideof the air cleaner housing with a damp cloth. Do not use compressed air to clean the housing.

6. Install a new primary filter element into the filter housing.

7. Install the cover for the filter housing.

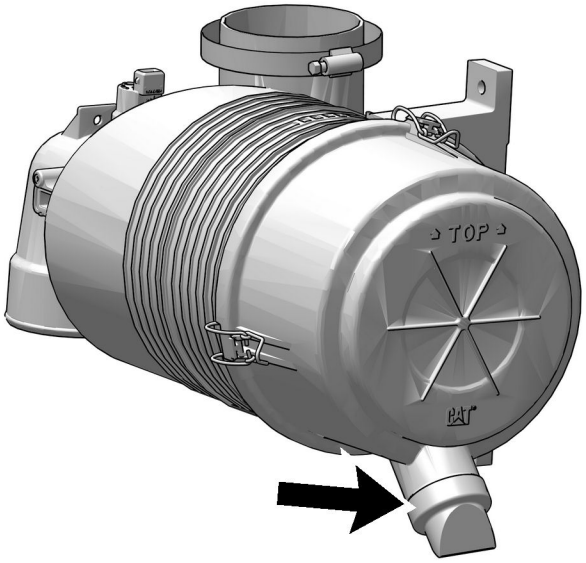

Illustration 413 g06383879

8. Rotate the cover clockwise and latch the cover.

Note: Make sure that the cover is properly positioned.

9. Close the engine access door.

10. Start the engine. The alert indicator for air filter restriction should turn off. If the alert indicator continues to light, replace the secondary air filter. Refer to Operation and Maintenance Manual, “Engine Air Filter Secondary Element - Replace”.

i07639241

Engine Air Filter Secondary Element - Replace

SMCS Code: 1054-510-SE

NOTICE
Always replace the secondary filter element. Never attempt to reuse the secondary filter element by cleaning the element.

When the primary filter element is cleaned for the third time, the secondary filter element should be replaced.

The secondary filter element should also be replaced if the restricted Air Filter indicator comes on after the installation of a clean primary filter element or if the exhaust smoke is still black.

NOTICE
The filter should be kept in service for no longer than one year

1. Open the engine access door.

2. The air filter housing is located on the right side of the engine compartment.

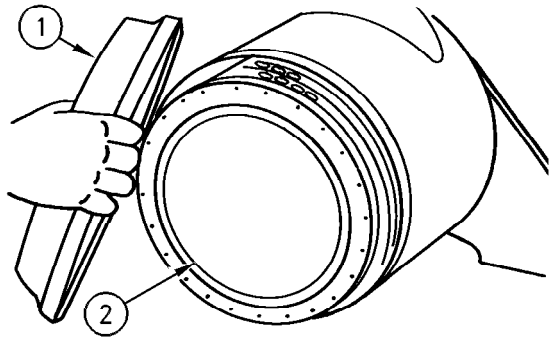

Illustration 414 g00101864

3. Unlatch the air cleaner housing cover (1). Rotate the cover counterclockwise and remove the cover.

4. Remove the primary filter element (2).

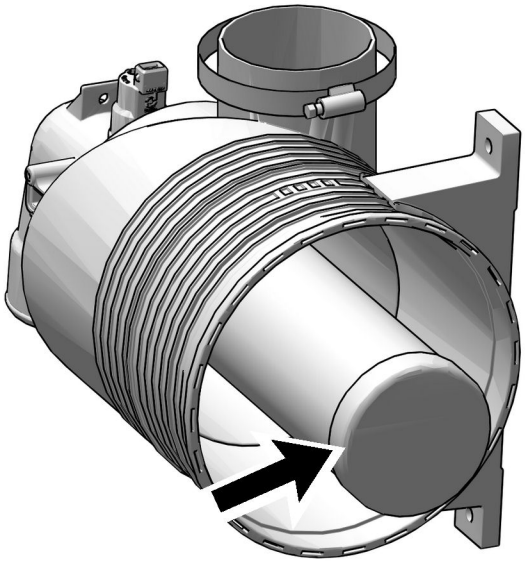

Illustration 415 g06383889

5. Clean the inside of the air cleaner housing with a damp cloth. Do not use compressed air to clean the housing.

6. Remove the secondary filter element.

7. Cover the air inlet opening.

8. Clean the inside of the air cleaner housing with a damp cloth, if necessary. Do not use compressed air to clean the housing.

9. Uncover the air inlet opening.

10. Install a new secondary element.

11. Install the primary element.

12. Install the cover for the filter housing.

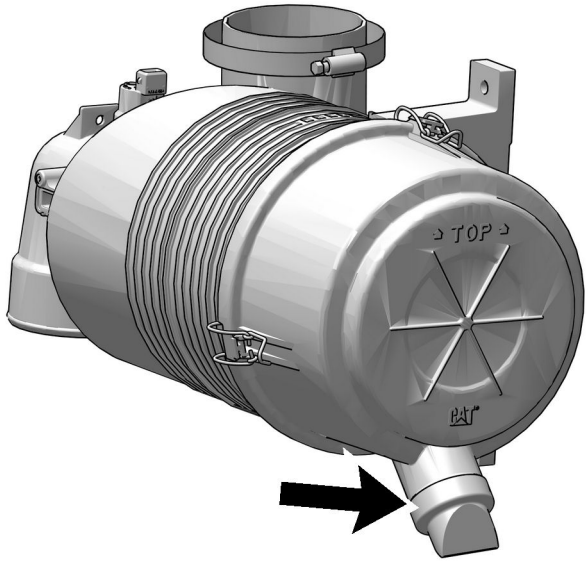

Illustration 416 g06383879

13. Rotate the cover clockwise and latch the cover.

Note: Ensure that the cover is properly positioned.

14. Close the engine access door.

i07466386

Engine Compartment - Inspect/Clean

SMCS Code: 1000-040-CPA; 1000-070-CPA

Inspect the engine compartment for dirt buildup or debris. Remove any dirt or debris from the engine compartment.

1. Open the engine access door. Refer to Operation and Maintenance Manual, “Access Doors and Covers”.

Illustration 417 g06330418

2. Remove any debris or dirt from the engine compartment. If necessary, remove the access panel to clean out the engine compartment.

Note: Use care when you clean the engine compartment. Damage to the machine may occur.

3. Close the engine access door.

Air Conditioning Condenser

The air conditioning condenser is on the access door of the engine compartment. Cleaning the air conditioning condenser will maintain optimum performance of the air conditioning system.

Use low-pressure water to clean the condenser.

i07466362

Engine Crankcase Breather - Replace
(and PCV Valve Check)

SMCS Code: 1317-510

Note: Only applies to engines with aftertreatment.

1. Open the engine access door. Refer to Operation and Maintenance Manual, “Access Doors and Covers”.
2. Tilt the radiator upward. Refer to Operation and Maintenance Manual, “Radiator Tilting”.

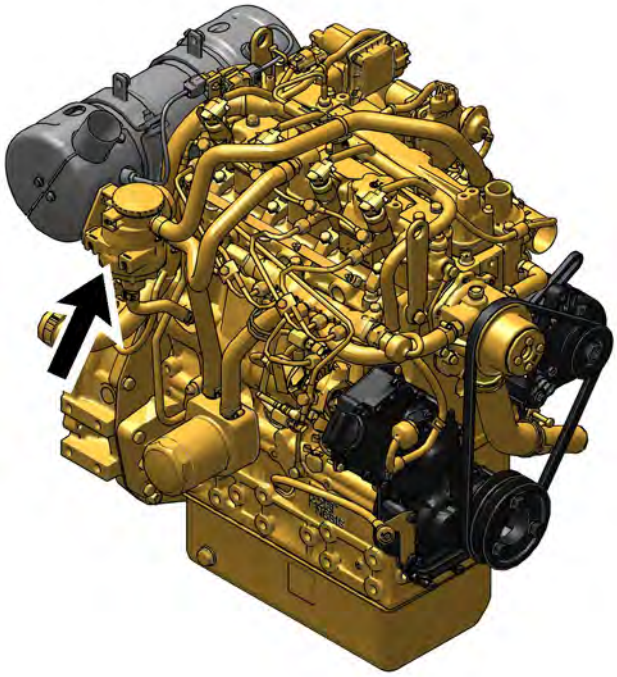

Illustration 418 g06383930
C2.2

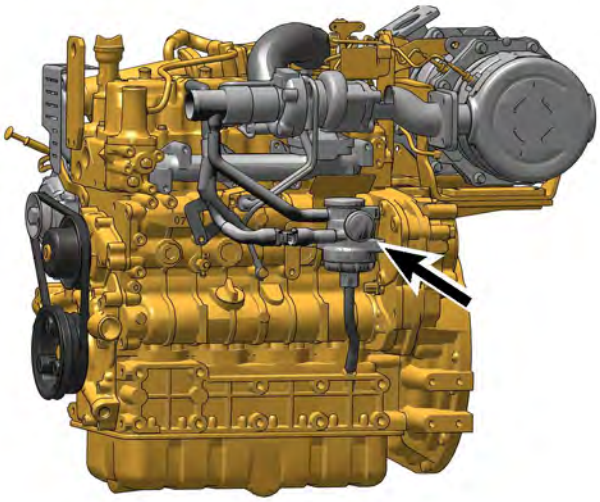

Illustration 419 g06330542
C3.3B

Illustration 420 g03392048
C2.2 and C3.3B

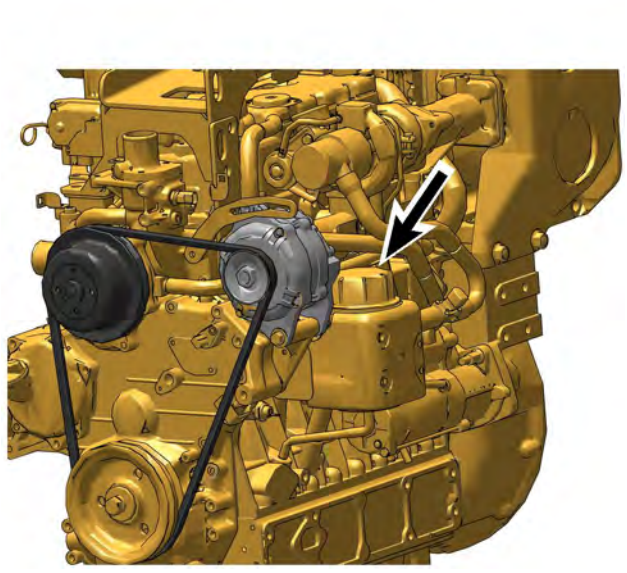

Illustration 421 g06330538
C3.8

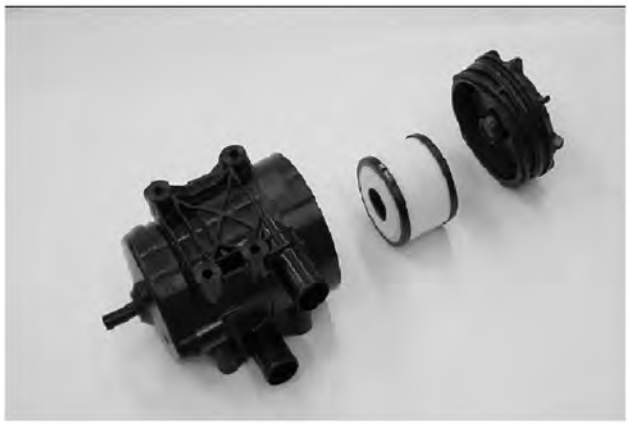

Illustration 422 g02826940
C3.8

3. The breather is located in the engine compartment on the right-hand side of engine. There is cap on the breather and a replaceable element inside.

Note: This service may be performed without removing the housing from the engine.

4. Remove the breather cap and remove the filter element.

Note: The C2.2 and C3.3B are equipped with cap on bottom portion of the canister. Use a wrench to remove the breather cap. The C3.8 is equipped with cap on top of canister, remove cap by applying downward pressure on the cap while turning.

5. Clean the housing and the cap for the breather.

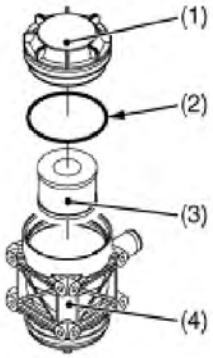

Illustration 423 g02827582
C3.8
(1) Cover
(2) O-ring
(3) Filter Element
(4) Housing

6. For the C3.8 only, press the PCV valve to ensure that the valve moves smoothly. If the valve does not move smoothly, replace the housing.

a. Install the new filter element in the breather. Install the breather cap.

b. Tilt the radiator downward.

c. Close the engine access door.

i08756662

Engine Oil Level - Check

SMCS Code: 1348-535-FLV

WARNING

Hot oil and hot components can cause personal injury. Do not allow hot oil or hot components to contact skin.

NOTICE
Do not overfill the crankcase. Engine damage can result.

1. Stop the engine and allow 10 to 20 minute for the oil to drain back into the oil pan.
2. Prepare the machine for maintenance. Refer to Operation and Maintenance Manual , “Prepare the Machine for Maintenance".

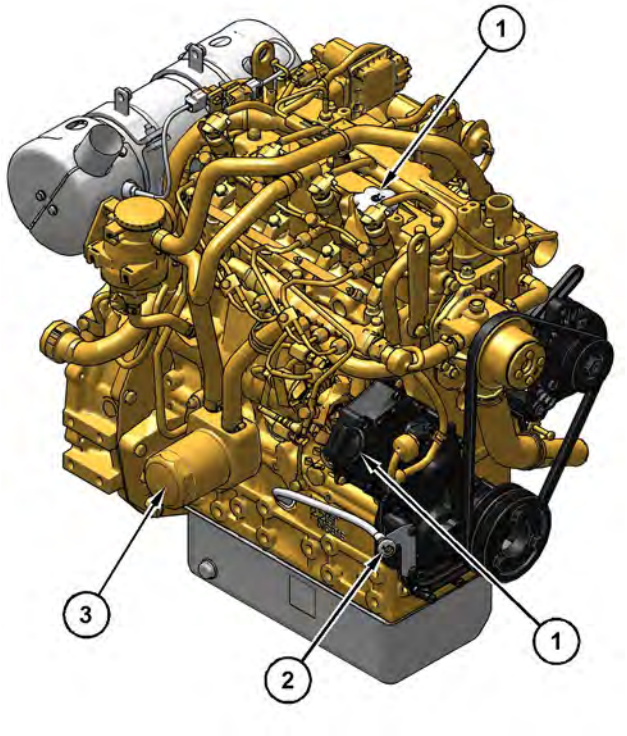

Illustration 424 g06383944

C2.2 Engine

(1) Oil Filler Cap
(2) Oil Level Gauge
(3) Oil Filter

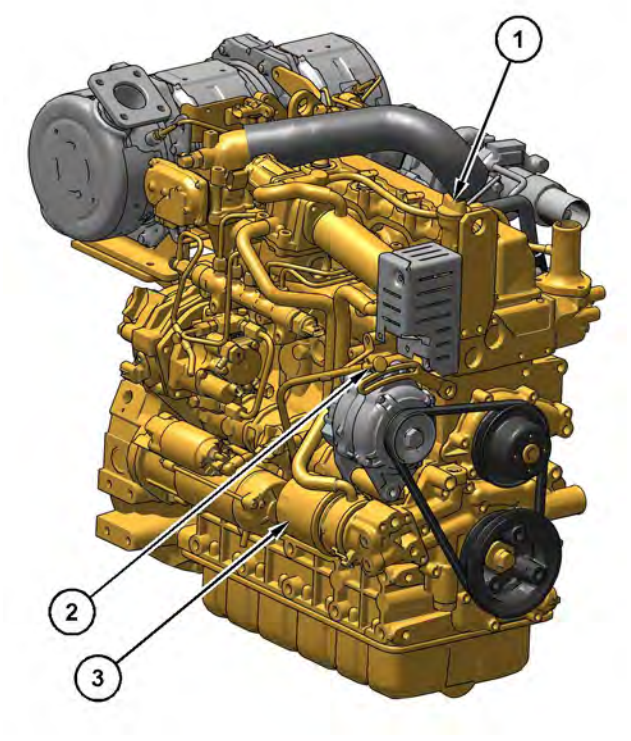

Illustration 425 g06330431

C3.3B Engine

(1) Oil Filler Cap
(2) Oil Level Gauge
(3) Oil Filter

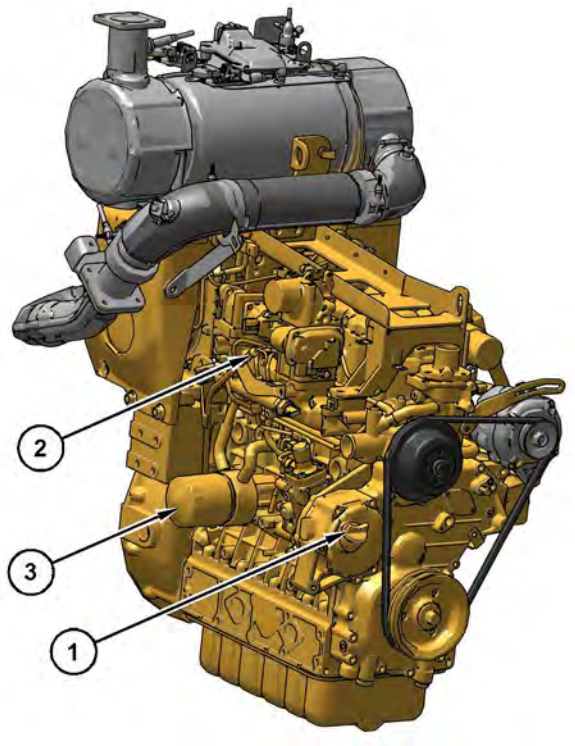

Illustration 426 g06330443

C3.8 engine

(1) Oil Filler Cap
(2) Oil Level Gauge
(3) Oil Filter

3. Open the engine access door. Refer to Operation and Maintenance Manual, “Access Doors and Covers”.

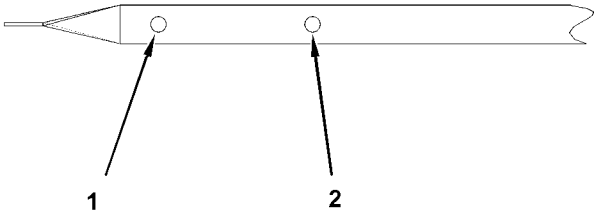

Illustration 427 g01277108

(1) Oil level add mark
(2) Full mark

4. Maintain the oil level between the “ADD” (1) mark and the “FULL” (2) mark on the oil level gauge.

5. If necessary, remove the oil filler cap (1) and add oil.

6. Clean the oil filler cap and install the oil filler cap.

7. Close the engine access door.

i08760803

Engine Oil Sample - Obtain

SMCS Code: 1348-554-SM; 7542-008

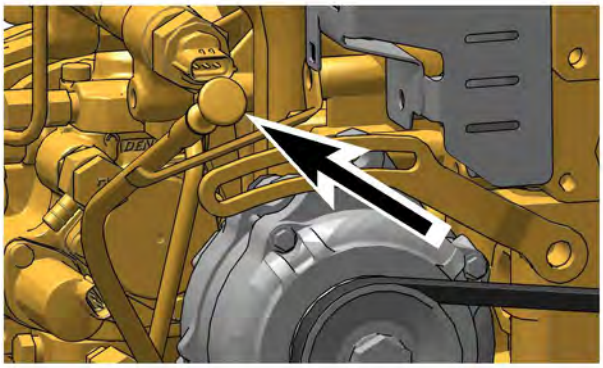

Illustration 428 g06330415

Typical Example

Prepare the machine for maintenance. Refer to Operation and Maintenance Manual , “Prepare the Machine for Maintenance".

Obtain the oil sample of the engine oil through the opening for the dipstick.

Reference: For more information, refer to Special Publication, SEBU6250, “Caterpillar Machine Fluids Recommendations” “S·O·S Oil Analysis” and Special Publication, PEHP6001, “How To Take A Good Oil Sample”.

i08755954

Engine Oil and Filter - Change

SMCS Code: 1308-510; 1348-044

WARNING

Hot oil and hot components can cause personal injury. Do not allow hot oil or hot components to contact skin.

NOTICE
Care must be taken to ensure that fluids are contained during performance of inspection, maintenance, testing, adjusting, and repair of the product. Be prepared to collect the fluid with suitable containers before opening any compartment or disassembling any component containing fluids.

Refer to Special Publication, PERJ1017, “Dealer Service Tool Catalog” for tools and supplies suitable to collect and contain fluids on Cat ® products.

Dispose of all fluids according to local regulations and mandates.

The normal oil change interval for the machine is Every 500 Service Hours or every year when the following conditions are met:

- Use an engine oil in the Operation and Maintenance Manual, “Lubricant Viscosities”.
- Cat filters are used.
- The altitude does not exceed 2300 m (7545 ft).

An oil change interval of Every 250 Service Hours or every 6 months is required when the following conditions occur:

- Not using a recommended engine oil in the Operation and Maintenance Manual, “Lubricant Viscosities”.
- Cat filters are not used.
- The altitude exceeds 2300 m (7545 ft).

Refer to the results of the S·O·S oil analysis to determine if the oil change interval should be decreased. Consult your Cat Dealer for detailed information regarding the optimum oil change interval.

Note: Diesel Fuel Specification Type and Sulfur Content % (ppm), must be compliant with all applicable emission regulations for the are in which the engine is operated.

Note: For engines that do not have aftertreatment and do not have EGR, use of ULSD is not required. If the diesel fuel contains sulfur greater than 0.5% (5,000ppm), reduce the oil change interval by one-half. Diesel fuel containing more than 1.0% (10,000 ppm) sulfur is not approved for the engine.

Engine Oil and Filter - Change Procedure

1. Prepare the machine for maintenance. Refer to Operation and Maintenance Manual , “Prepare the Machine for Maintenance".

2. Open the engine access door. Refer to Operation and Maintenance Manual, “Access Doors and Covers”.

Note: The crankcase drain is on the right side of the oil pan.

Illustration 429 g06330418

3. Remove the access panel that is located below the drain plug. Remove the drain plug and allow the oil to drain into a suitable container. Install the drain plug and install the access panel.

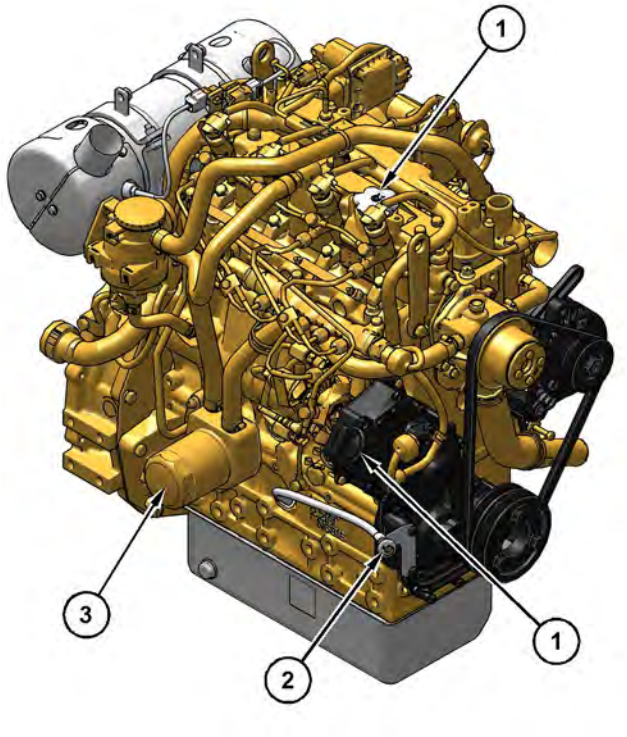

Illustration 430 g06383944

C2.2 Engine

(1) Oil Filler Cap
(2) Oil Level Gauge
(3) Oil Filter

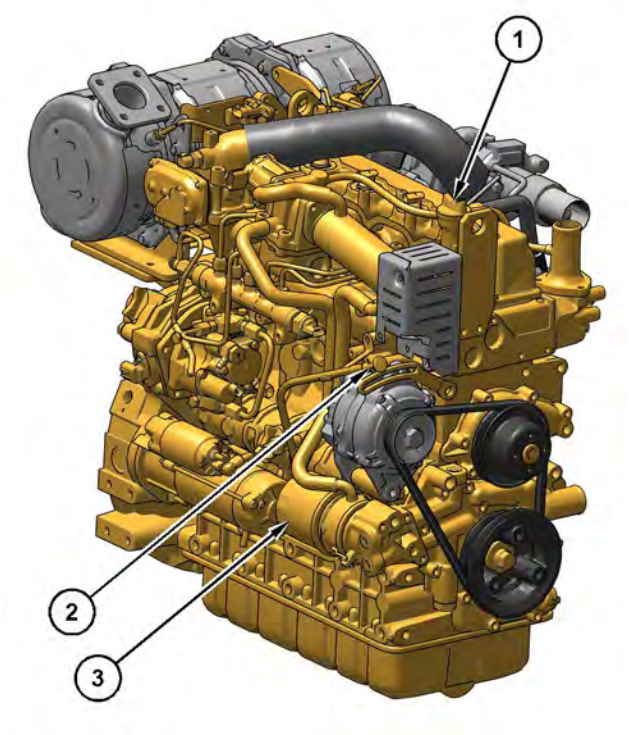

Illustration 431 g06330431

C3.3B Engine

(1) Oil Filler Cap
(2) Oil Level Gauge
(3) Oil Filter

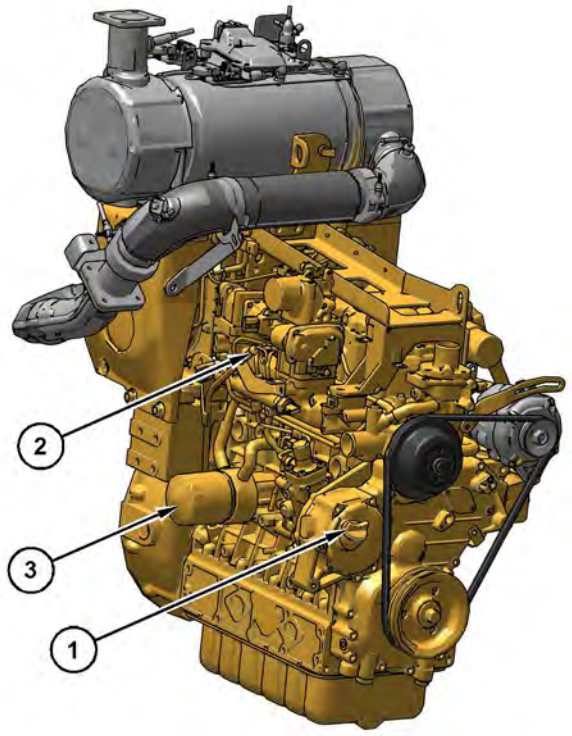

Illustration 432 g06330443

C3.8 Engine

(1) Oil Filler Cap
(2) Oil Level Gauge
(3) Oil Filter

4. Remove the filter element with a 187-2718 Filter Wrench. Refer to "Inspect a Used Filter for Debris."

5. Apply a thin film of clean engine oil to the sealing surface of the new filter element.

6. Install a new engine oil filter hand tighten one turn after the seal first contacts the base. Note the position of the index marks on the filter in relation to a fixed point on the filter base.

Note: There are rotation index marks on the engine oil filter that are spaced 90 degrees or 1/4 of a turn away from each other. When you tighten the engine oil filter, use the rotation index marks as a guide.

7. Tighten the filter according to the instructions that are printed on the filter. Use the index marks as a guide. For non-Cat filters, use the instructions that are provided with the filter.

Note: Use a Cat strap wrench, or another suitable tool, to turn the filter to the amount that is required for final installation. Ensure that the installation tool does not damage the filter.

8. Remove the oil filler cap (1). Fill the crankcase with new oil. Refer to Operation and Maintenance Manual, “Lubricant Viscosities” and Operation and Maintenance Manual, “Refill Capacities” for information about the oil. Clean the oil filler plug and install the oil filler plug.

9. Start the engine and allow the oil to warm. Check for leaks.

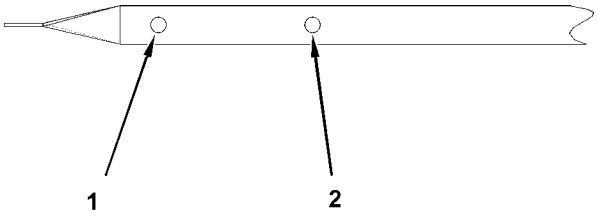

Illustration 433 g01277108

(1) Oil level add mark
(2) Full mark

10. Stop the engine and allow the oil to drain back into the oil pan. Fill the crankcase to the “FULL” mark (2) on the oil level gauge. **Do not exceed the “FULL” mark on the oil level gauge.** Add oil or drain oil if necessary.

11. Close the engine access door.

Inspect a Used Filter for Debris

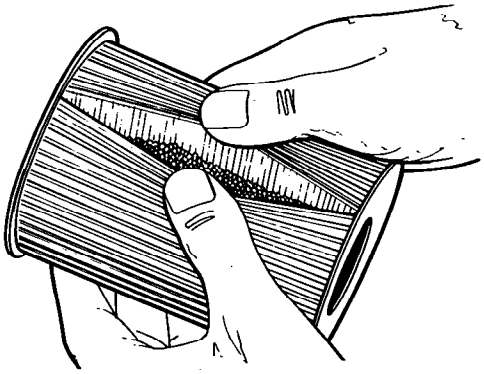

Illustration 434 g00100013

The element is shown with debris.

Use a filter cutter to cut the filter element open. Spread apart the pleats and inspect the element for metal and for other debris. An excessive amount of debris in the filter element can indicate a possible failure.

If metals are found in the filter element, a magnet can be used to differentiate between ferrous metals and nonferrous metals.

Ferrous metals can indicate wear on steel parts and on cast iron parts.

Nonferrous metals can indicate wear on the aluminum parts of the engine such as main bearings, rod bearings, or turbocharger bearings.

Small amounts of debris may be found in the filter element. This debris could be caused by friction and normal wear. Consult your Caterpillar dealer to arrange for further analysis if an excessive amount of debris is found.

Using an oil filter element that is not recommended by Caterpillar can result in severe engine damage to engine bearings, to the crankshaft, and to other parts. This can result in larger particles in unfiltered oil. The particles could enter the lubricating system and the particles could cause damage.

i06849849

Engine Valve Lash - Check

SMCS Code: 1105-025

Refer to the Service Manual for the complete adjustment procedure for the engine valve lash.

A qualified mechanic should adjust the engine valve lash and the fuel injector timing because special tools and training are required.

See your Cat dealer for this service.

i07642088

Equipment Lowering Control Valve - Check

SMCS Code: 5147-MA

WARNING

Personal injury or death can result from a work tool falling.

Keep personnel away from the front of the machine when lowering the work tool.

Illustration 435 g06385067

Roof-mounted Finger Latch

The bypass valve (Dead Engine Lower) is located overhead on the underside of the cab roof.

Illustration 436 g01332374

Icon molded into the finger latch.

Actuation

1. Pull down on the finger latch. Release the finger latch to stop the loader arms, if necessary.
2. Allow the loader arms to lower until the work tool is on the ground.
3. Release the finger latch.

4. Make the necessary repair before you operate the machine.

i07718469

Equipment Lowering Control Valve - Check

SMCS Code: 5147-MA

WARNING

Personal injury or death can result from a work tool falling.

Keep personnel away from the front of the machine when lowering the work tool.

Illustration 437 g06385067

Roof-mounted Finger Latch

The bypass valve (Dead Engine Lower) is located overhead on the underside of the cab roof.

Illustration 438 g01332374

Icon molded into the finger latch.

Actuation

1. Pull down on the finger latch. Release the finger latch to stop the loader arms, if necessary.
2. Allow the loader arms to lower until the work tool is on the ground.
3. Release the finger latch.
4. Make the necessary repair before you operate the machine.

i08227346

Exhaust Gas Recirculation Valve - Clean

SMCS Code: 5137-070

S/N: EK51–Up

S/N: GJ51–Up

S/N: DX81–Up

S/N: HC91–Up

S/N: KE91–Up

S/N: P9C1–Up

S/N: WKD1–Up

S/N: R9E1–Up

S/N: RWK1–Up

S/N: D5R1–Up

S/N: HRS1–Up

S/N: D5Z1–Up

At 3000 hours the exhaust gas recirculation valve, connecting pipe and exhaust cooler will need to be cleaned. The exhaust gas recirculation maintenance timer will need to be reset for the engine to function correctly.

At 3000 hours a 5838-31 EGR Valve Malfunction diagnostic trouble code will become active and the amber warning lamp will become solid. This information is to inform the operator that cleaning and reset are required. The operator then has 100 hours to complete the cleaning and reset.

If at 3100 hours the cleaning and reset has not been performed, a 5838-14 EGR Valve Malfunction : Special Instruction diagnostic trouble code will become active. The amber warning lamp will start to flash and the engine will be derated.

WARNING

Sulfuric Acid Burn Hazard may cause serious personal injury or death.

The exhaust gas cooler may contain a small amount of sulfuric acid. The use of fuel with sulfur levels greater than 15 ppm may increase the amount of sulfuric acid formed. The sulfuric acid may spill from the cooler during service of the engine. The sulfuric acid will burn the eyes, skin and clothing on contact. Always wear the appropriate personal protective equipment (PPE) that is noted on a material safety data sheet (MSDS) for sulfuric acid. Always follow the directions for first aid that are noted on a material safety data sheet (MSDS) for sulfuric acid.

Note: Before using the cleaner and performing the cleaning procedure, ensure that you have read and understood the safety instructions that are detailed in Operation and Maintenance Manual, General Hazard Information.

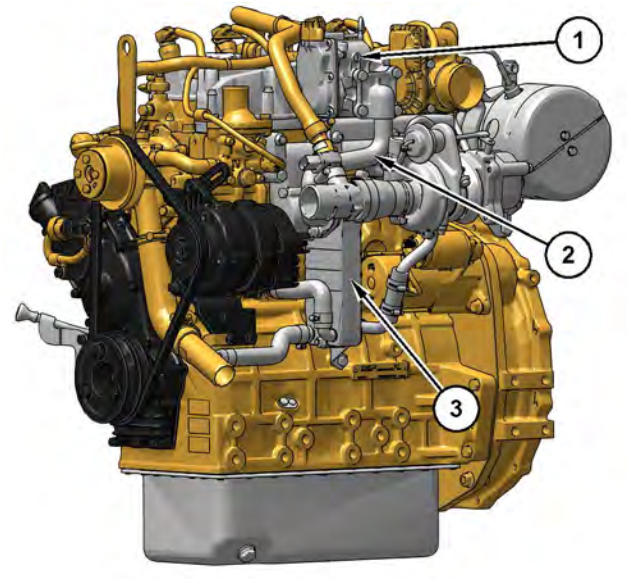

Illustration 439 g06384041

(1) Exhaust gas recirculation valve
(2) Connecting pipe
(3) Cooler

Remove the exhaust gas recirculation valve (1), remove the connecting pipe (2) and remove the exhaust cooler (3). For more information, refer to Disassembly and Assembly, Exhaust Gas Recirculation Valve - Remove and Install and Disassembly and Assembly, Exhaust Cooler (NRS) - Remove and Install.

The exhaust gas recirculation valve, connecting pipe and the exhaust cooler can be cleaned.

Spray Loctite 7070 ODC-Free Cleaner and Degreaser into the port of the exhaust gas recirculation valve (1). Wait for a few minutes. Use the soft lint free cloth to clean the exhaust gas recirculation valve to remove the carbon deposits from the gas recirculation valve.

The connecting pipe and the exhaust cooler can be cleaned using a soft lint free cloth and deionized water.

Note: Once the cleaning procedure is complete, all components must be dried before installation.

For more information on installation, refer to Disassembly and Assembly, Exhaust Gas Recirculation Valve - Remove and Install. Also, refer to Disassembly and Assembly, Exhaust Cooler (NRS) - Remove and Install.

The electronic service tool will need to be connected to reset the maintenance timer after the exhaust gas recirculation valve has been cleaned and installed. This reset will reset the hour counter for exhaust gas recirculation valve maintenance to zero and if necessary, clear the diagnostic codes. Contact your Cat dealer to have this performed.

i07463077

Final Drive Oil - Change (Tracked Models)

SMCS Code: 4011-044-OC; 4050-044; 4050-044-OC; 4050-044-FLV; 4050; 4050-535-FLV; 4070-044; 7527

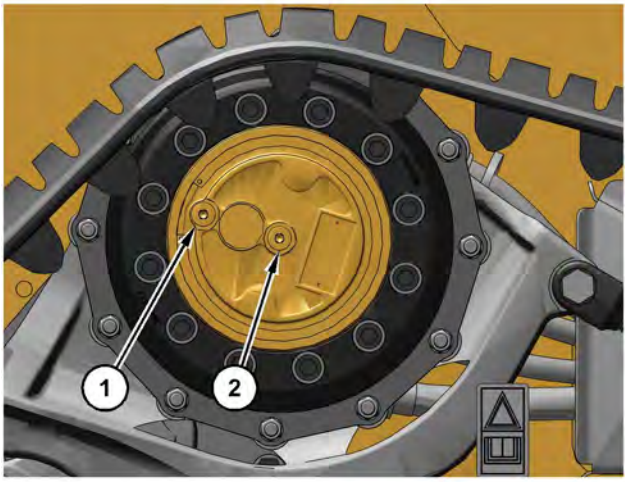

Illustration 440 g06405698

Multi-Terrain Loader

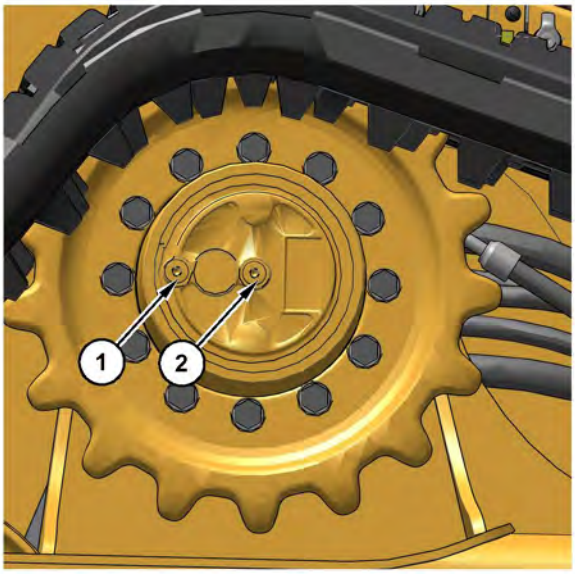

Illustration 441 g06330206

Compact Track Loader

(1) Oil fill/drain plug
(2) Oil check plug

Final Drive Oil - Change Procedure

1. Position one final drive so that the oil fill/drain plug (1) is at the bottom.

Note: Refer to Operation and Maintenance Manual, “General Hazard Information” for information on containing fluid spillage.

2. Use an 8 mm (5/16 inch) allen wrench. Remove the oil plugs (1) and (2). Allow the oil to drain into a suitable container.
3. Check the drained oil for large metal chips or a significant number of metal particles.

Note: Some small amount of break-in debris is normal and should not cause alarm.

Note: Dispose of drained fluids according to local regulations.

4. Clean the plugs and inspect the plugs. Replace a worn plug or a damaged plug.
5. Position the final drive so that the oil fill/drain plug (1) is at the top.
6. Add oil through the opening of the oil fill/drain plug (1) that is now at the top.
7. Fill the final drive to the bottom of the opening for the oil check plug (2). Refer to Operation and Maintenance Manual, “Lubricant Viscosities” and Operation and Maintenance Manual, “Capacities (Refill)”.
8. Install the two oil plugs. Tighten the oil plugs to a torque of 27 ± 1 N·m (20 ± 0.7 lb ft).
9. Perform Step 1 to Step 8 on the other final drive.
10. Completely remove any oil that has spilled.
11. Start the engine and allow the final drives to operate through several cycles.
12. Stop the engine.
13. Check the oil level.

14. Maintain the oil level to the bottom of the opening for the fill/drain plug (2).

i07463060

Final Drive Oil Level - Check (Tracked Models)

SMCS Code: 4011-535-FLV; 4050; 4050-535-FLV; 4070-535-FLV; 7524; 7527

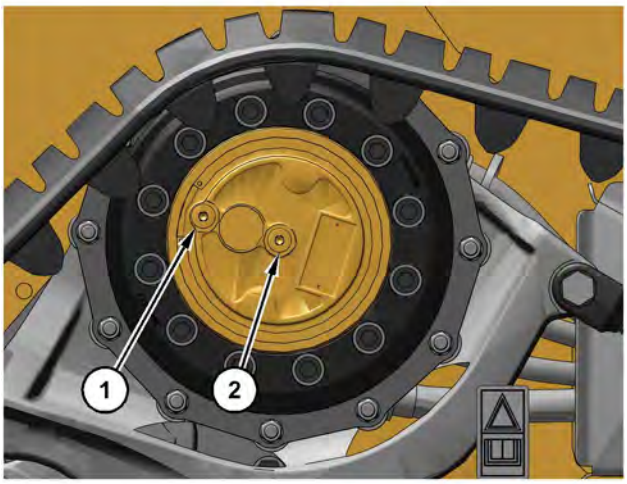

Illustration 442 g06405701

MTL model

(1) Oil fill/drain plug
(2) Oil check plug

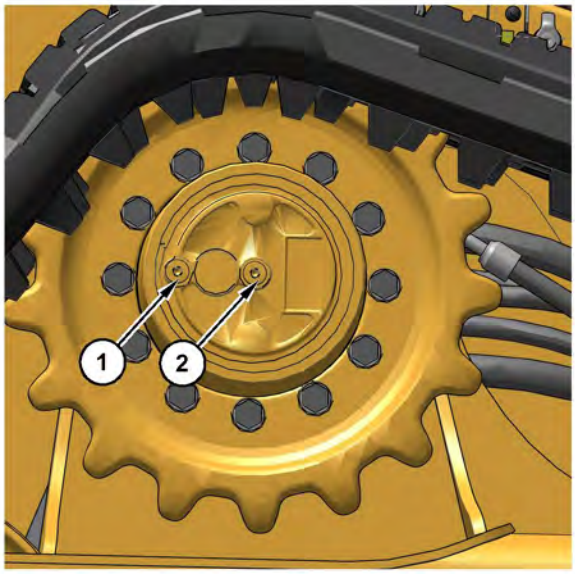

Illustration 443 g06330206

CTL model

(1) Oil fill/drain plug
(2) Oil check plug

1. Position one final drive so that the oil fill/drain plug (1) is at the top.

Note: Refer to Operation and Maintenance Manual, “General Hazard Information” for information on Containing Fluid Spillage.

2. Use an 8 mm (5/16 inch) allen wrench. Remove the oil check plug (2).

3. Check the oil level. The oil should be near the bottom of the opening for the oil check plug (2).

4. Add oil through the opening for the oil fill/drain plug (1), if necessary.

Note: Overfilling the final drive will cause the seals on the travel motor to allow hydraulic oil or water to enter the final drive and contaminate the oil.

5. Clean the oil plugs.

Note: Some small amount of break-in debris is normal and should not cause alarm.

6. Install the oil plugs. Tighten the oil plugs to a torque of 27 ± 1 N·m (20 ± 0.7 lb ft).

7. Repeat the procedure for the other final drive.

i07433276

Fire Suppression System - Service

SMCS Code: 7401

The factory installed fire suppression system requires periodic inspection and service. These activities must be carried out by an authorized fire suppression distributor. Contact an authorized fire suppression distributor for recommended service.

When performing maintenance, or service, the fire suppression system must be isolated.

Note: Only authorized personnel should perform visual inspections of the fire suppression system.

Note: In the event of a low power indication or if the battery life is less than 25% the fire suppression system battery must be replaced.

1. Isolate the system. Refer to this Operation and Maintenance Manual.
2. Visually inspect all fire suppression system components for damage or debris which includes:
   - Agent tanks
   - Gas cylinders
   - Fire suppression system electronic components and detectors
   - Fire suppression system heat sensing wires and agent lines for damage or abrasion
   - Nozzles and nozzle caps for damage or debris buildup

Immediately repair or replace any damaged components.

Contact an authorized fire suppression agent for inspection, if required.

i07376984

Fuel System Filter (In-Line) - Replace

SMCS Code: 1261-510

S/N: PWN1–Up

NOTICE

Care must be taken to ensure that fluids are contained during performance of inspection, maintenance, testing, adjusting, and repair of the product. Be prepared to collect the fluid with suitable containers before opening any compartment or disassembling any component containing fluids.

Refer to Special Publication, PERJ1017, “Dealer Service Tool Catalog” for tools and supplies suitable to collect and contain fluids on Cat ® products.

Dispose of all fluids according to local regulations and mandates.

Note: Do not fill fuel filters before installation in any circumstance.

Note: Do not open any high-pressure lines to purge air from the fuel system.

Note: Replace the fuel filter before the scheduled interval if any of the following occur:

- Engine performance is poor.
- Hard Starting
- Engine dies under load.

1. Open the engine access door. Refer to Operation and Maintenance Manual, “Access Doors and Covers”. The filter is on the left side of the engine compartment in-line between the fuel tank and the engine fuel lift pump.

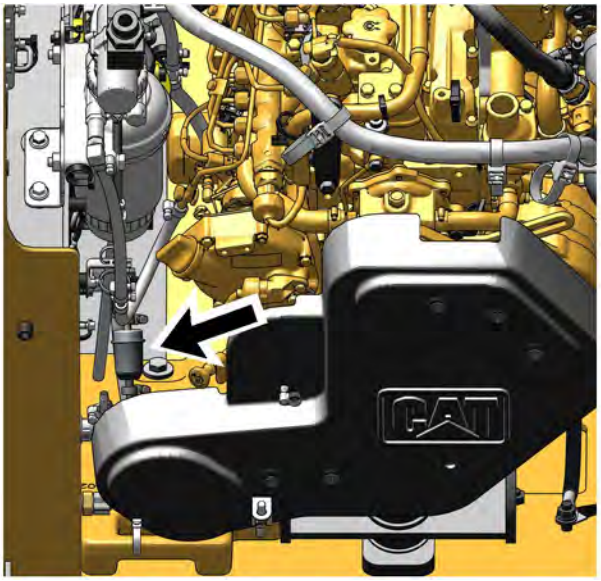

Illustration 444 g06385091

2. Loosen the hose clamps.

3. Remove the fuel filter and discard the fuel filter.
4. Replace the fuel filter. Ensure that the arrow on the filter points upwards or towards the fuel system priming pump.
5. Tighten the hose clamps.
6. Start the engine.
7. Check for leaks.
8. Close the engine access door.

i07376993

Fuel System Primary Filter (Water Separator) - Drain

SMCS Code: 1263-543

NOTICE
Care must be taken to ensure that fluids are contained during performance of inspection, maintenance, testing, adjusting, and repair of the product. Be prepared to collect the fluid with suitable containers before opening any compartment or disassembling any component containing fluids.

Refer to Special Publication, PERJ1017, “Dealer Service Tool Catalog” for tools and supplies suitable to collect and contain fluids on Cat ® products.

Dispose of all fluids according to local regulations and mandates.

The fuel system water separator is located in the left side of the engine compartment.

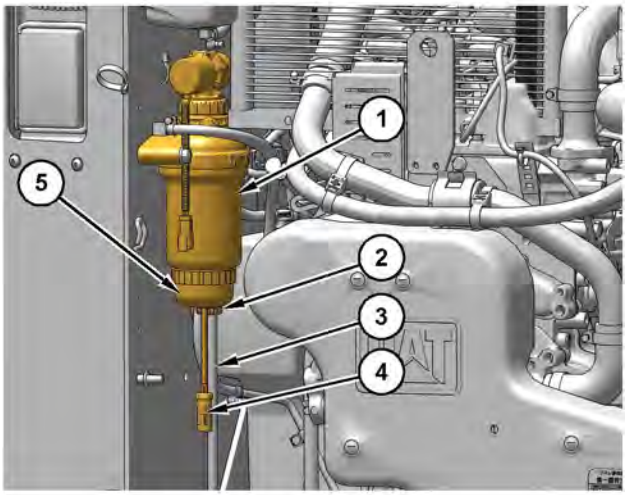

Illustration 445 g06405741

(1) Fuel Filter
(2) Drain Valve
(3) Drain Hose
(4) Water-In-Fuel Sensor Plug
(5) Water Bowl

1. Open the engine access door. Refer to Operation and Maintenance Manual, “Access Doors and Covers”.
2. Disconnect the water-in-fuel sensor plug (4) from the bottom of the water bowl (5).
3. Insert the drain hose (3) into a suitable container. Loosen the drain valve (2) on the bottom of the fuel filter (1).

Note: One half turn to one full turn will fully open the valve.

4. Close the drain valve (2) by hand. Do not tighten the drain valve (2) with a tool. Damage to the valve or to the seals may occur.
5. Reconnect the water-in-fuel sensor plug (4).
6. Close the engine access door.
7. Dispose of the water and sediment according to local regulations.

i07377059

Fuel System Primary Filter (Water Separator) Element - Replace

SMCS Code: 1260-510-FQ; 1263-510-FQ

NOTICE
Care must be taken to ensure that fluids are contained during performance of inspection, maintenance, testing, adjusting, and repair of the product. Be prepared to collect the fluid with suitable containers before opening any compartment or disassembling any component containing fluids.

Refer to Special Publication, PERJ1017, “Dealer Service Tool Catalog” for tools and supplies suitable to collect and contain fluids on Cat ® products.

Dispose of all fluids according to local regulations and mandates.

Note: This unit has a dual purpose. The element serves as a water separator and a fuel filter.

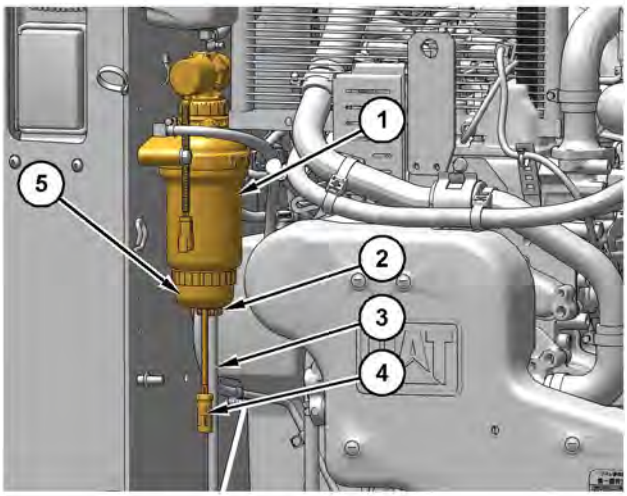

Illustration 446 g06405741

(1) Fuel Filter
(2) Drain Valve
(3) Drain Hose
(4) Water-In-Fuel Sensor Plug
(5) Water Bowl

1. Open the engine access door. Refer to Operation and Maintenance Manual, “Access Doors and Covers”.
2. Disconnect the water-in-fuel sensor plug (4) from the bottom of the water bowl (5).
3. Insert the drain hose (3) into a suitable container. Open the drain valve (2) on the bottom of the fuel filter (1) and allow the water and fuel to drain into a suitable container.

Note: One half to one full turn will fully open the valve (2).

4. Close the drain valve (2) by hand. Do not tighten the drain valve (2) with a tool. Damage to the valve or to the seals may occur.
5. Rotate the water bowl (5) counterclockwise to separate it from the fuel filter (1).
6. Rotate the fuel filter (1) counterclockwise approximately three-quarters of a turn to remove.
7. Clean the mounting base for the fuel filter.

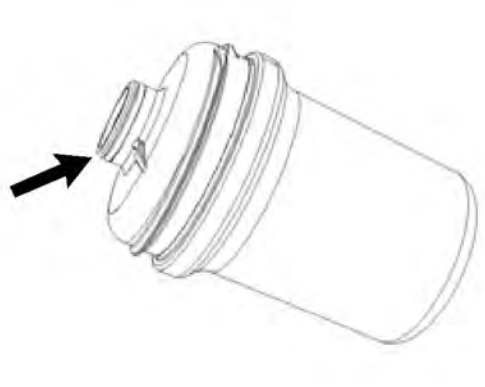

Illustration 447 g06311236

8. Lubricate the seal with clean fuel. Install the new fuel filter and housing onto the mounting base. Rotate clockwise approximately three-quarters of a turn to fasten the fuel filter to the mounting base. Hand tighten until an audible "click" is heard indicating the housing is fully seated to the mounting base.

Note: Do not prefill the filter with fuel. Contamination of the fuel system will occur and damage to the injectors may occur.

9. Reinstall the water bowl (5) onto the new fuel filter (1) by rotating it clockwise. Do not tighten the water bowl with a tool.
10. Reconnect the water-in-fuel sensor plug (4).
11. Prime the fuel system (Key ON only) to fill the fuel filter with fuel. Refer to Operation and Maintenance Manual, “Fuel System Priming Pump - Operate”.
12. Close the engine access door.

13. Dispose of the water, sediment, and fuel filter according to local regulations.

i07377066

Fuel System Priming Pump - Operate

SMCS Code: 1258-548

The fuel transfer or priming pump is located on the left-hand side of the engine compartment, and may be either electric or manual. Follow the appropriate procedure for your machine.

Two examples that may cause the fuel system to lose prime are listed here:

- The machine runs out of fuel.
- The Fuel System Filter/Water Separator Element is replaced.

Follow the steps below to prime the fuel system.

Electric Fuel Transfer

1. Ensure that the engine start switch is in the OFF position. Turn the engine start switch to the ON position.

Note: Do not start the engine. This operation only starts the fuel pump. The pump will run approximately 30 seconds.

2. Attempt to start the engine. If the engine starts and the engine runs rough or the engine misfires, operate the engine at low idle until the engine runs smoothly.

Note: If the engine fails to start or if the engine continues to misfire or smoke, stop the engine and repeat the procedure. If the problem persists after repeating the procedure, consult your Cat dealer.

Note: Do not open any high-pressure lines to purge air from the fuel system.

Manual Fuel Transfer

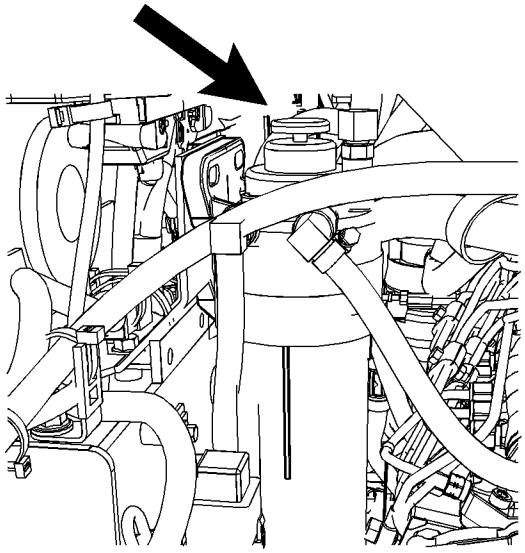

Illustration 448 g03822107

1. Open the engine access door. Refer to Operation and Maintenance Manual, “Access Doors and Covers”.

2. Push down on the top of the fuel priming pump plunger and release the fuel priming pump plunger to operate the fuel priming pump. Operate the fuel priming pump plunger to fill the new filter element with fuel. Continue to pump until increased resistance is felt. This resistance will indicate that the filter element is full of fuel.

3. Attempt to start the engine. If the engine starts and the engine runs rough or the engine misfires, operate the engine at low idle until the engine runs smoothly. If the engine fails to start or if the engine continues to misfire or smoke repeat the priming procedure.

4. Close the engine access door.

i01819309

Fuel Tank Cap - Clean

SMCS Code: 1273-070-Z2

1. Remove the fuel cap.

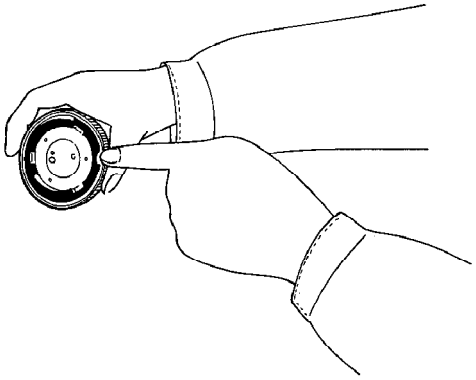

Illustration 449 g00104238

2. Inspect the cap. Replace the cap if the cap is damaged.
3. Wash the fuel cap in a clean, nonflammable solvent and dry the fuel cap.
4. Put a light coating of fuel on the cap gasket.
5. Install the fuel cap.

i07462484

Fuel Tank Water and Sediment - Drain

SMCS Code: 1273-543-M&S

NOTICE
Care must be taken to ensure that fluids are contained during performance of inspection, maintenance, testing, adjusting, and repair of the product. Be prepared to collect the fluid with suitable containers before opening any compartment or disassembling any component containing fluids.

Refer to Special Publication, PERJ1017, “Dealer Service Tool Catalog” for tools and supplies suitable to collect and contain fluids on Cat ® products.

Dispose of all fluids according to local regulations and mandates.

Note: Drain the water and the sediment from the fuel tank when the tank is almost empty.

1. Slowly remove the fuel tank cap to allow the tank to vent while you drain the tank.

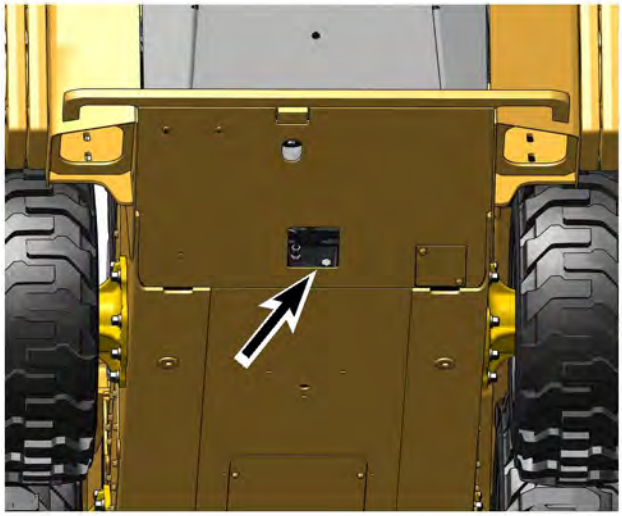

Illustration 450 g06330047
Type 1

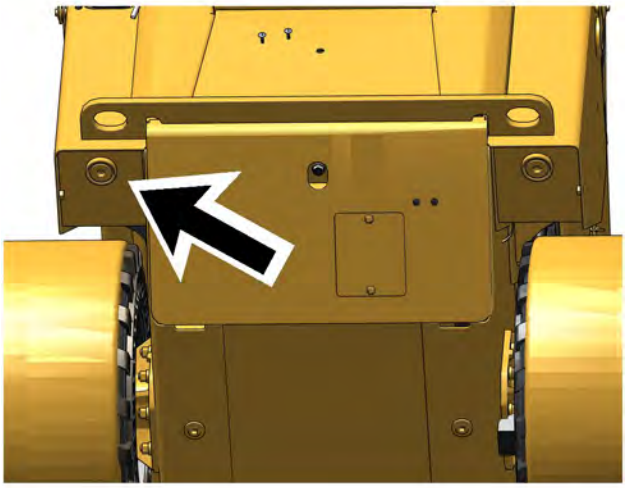

Illustration 451 g06405987
Type 2

2. If the machine is equipped with a plastic fuel tank inside the engine compartment (Type 1), remove the access plate on the bottom of the engine compartment.
3. Remove the fuel tank drain plug. Allow the water and the sediment to drain into a suitable container.
4. Install the fuel tank drain plug.

Note: For Type 1 only, apply 5P-3413 Pipe Sealant to the threads on the drain plug and torque to 11 ± 1 N·m (8 ± 1 lb ft).

Note: For Type 2 only, no sealant is required. Torque the drain plug to 420 ± 63 N·m (310 ± 46 lb ft).

5. Install the fuel tank cap.

i07377122

Fuses - Replace

SMCS Code: 1417-510; 1417; 7528

Fuses Inside the Cab

Fuses – Protect the electrical system from damage that is caused by overloaded circuits. Replace the fuse if the element separates. If the element of a new fuse separates, check the circuit. Repair the circuit, if necessary.

NOTICE
Replace the fuses with the same type and size only. Otherwise, electrical damage can result.

If it is necessary to replace fuses frequently, an electrical problem may exist. Contact your Caterpillar dealer

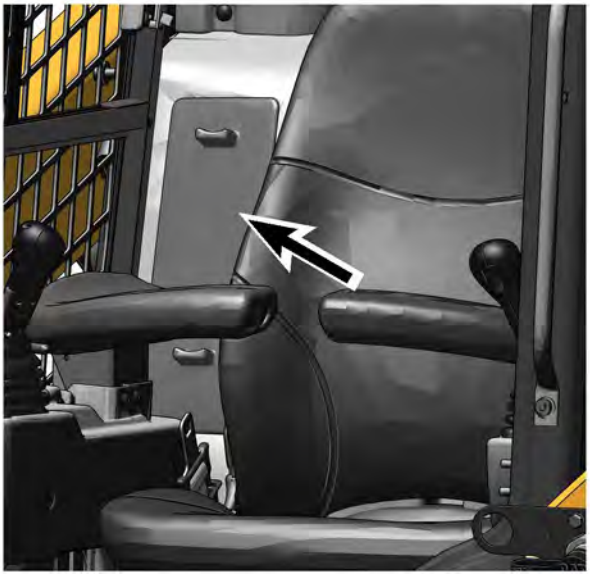

Illustration 452 g06329676

The fuse panel is located behind the seat on the right side.

Illustration 453 g06406020

Remove the cover to access the fuse panel.

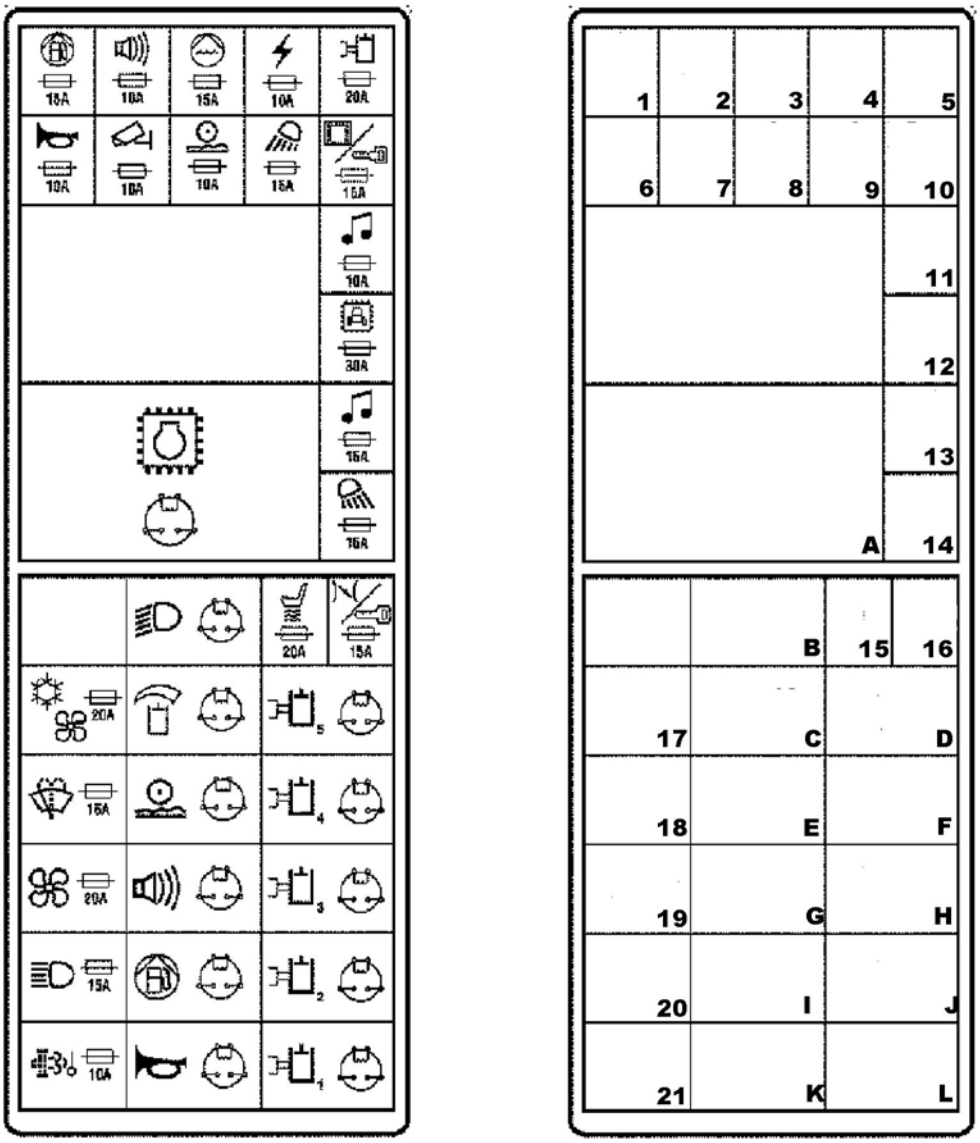

Illustration 454 g06299601

The following is a list of the fuses in the panel:

Fuel Pump Relay Power(1) – 15 Amp

Backup Alarm/Stop Lamp (2) – 15 Amp

Work Tool Water Tank(3) – 15 Amp

Power Port(4) – 10 Amp

Work Tool/High Flow Enable/Aux. Hydraulic Cooler(5) – 10 Amp

Horn (6) – 10 Amp

Backup Camera (7) – 10 Amp

ILEV/Ride Control (8) – 15 Amp

Front Working Lights (9) – 15 Amp

Key Switch (10) – 15A

Radio(11) – 10A

Machine ECM(12) – 30A

Product Link Radio(13) – 15A

Rear Work Lights/Beacon(14) – 15A

Air Ride/Heated Seat (15) – 20 Amp

Engine ECM Key Switch / LRC Throttle Actuator(16) – 15A

Air Conditioning Condenser Fan(17) – 20 Amp

Wiper / Washer(18) – 15 Amp

Air Conditioning Blower / Compressor (19) – 20 Amp

Roading Lights (20) – 15 Amp

NOx Sensor(21) – 10 Amp

Relays

(A) – Engine ECM Control Module Power

(B) – Stop Lamp

C – High Flow Enable / Auxiliary Hydraulic Cooler

D – Auxiliary electrical control “AUX7 (Trigger)”

E – ILEV/Ride Control

F – Auxiliary Electrical Control “AUX4 (C +)”

G – Backup Alarm

H – Auxiliary Electrical Control “AUX3 (C−)”

I – Fuel pump

J – Auxiliary Electrical Control “AUX5 (C2)”

K – Horn

L – Auxiliary Electrical Control “AUX6 (C1)”

Fuses Behind the Cab

If an optional Auxiliary Hydraulic Cooler is installed, a 60A fuse will be located in an in-line fuse holder near the power relay modules.

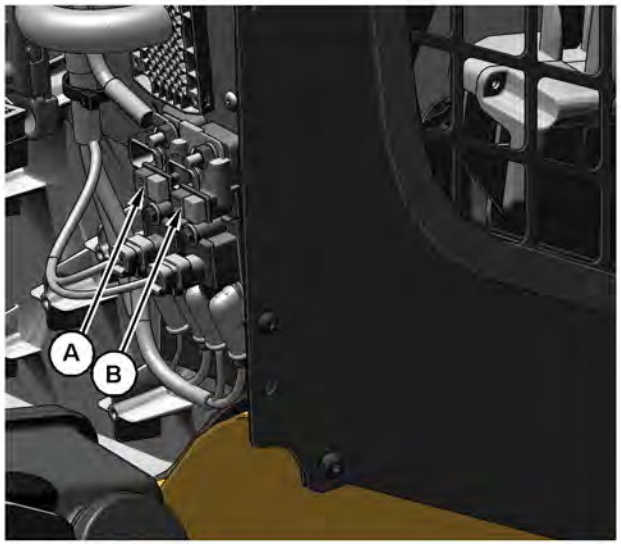

Illustration 455 g06329737

(A) First pair
(B) Second pair

To change these fuses, push up on the locking tab on the fuse cover. Pull the cover away from the back of the cab.

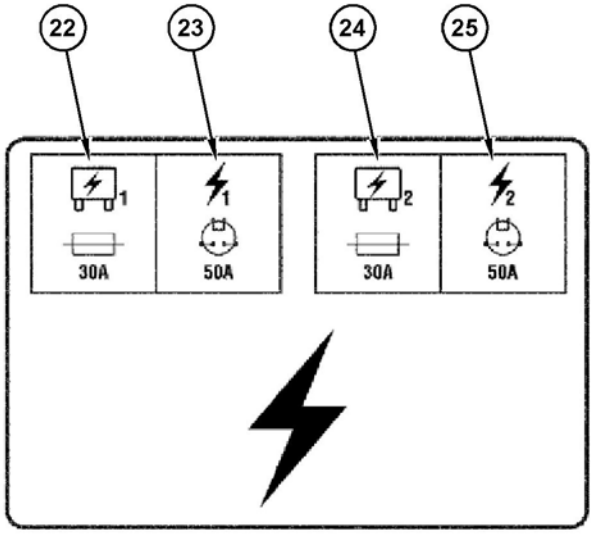

Illustration 456 g06300038

Main Power Relay Module-1 (Unswitched) Fuse(22) – 30 Amp

Main Power Relay Module-1 (Switched) Fuse(23) – 50 Amp

Main Power Relay Module-2 (Unswitched) Fuse(24) – 30 Amp

Main Power Relay Module-2 (Switched) Fuse(25) – 50 Amp

Fuses Inside Engine Compartment

Main Fuse

The main fuse is a 100 Amp buss bar style fuse. The fuse is mounted to the engine bay wall and is located near the battery. Disconnect the negative battery cable at the battery connection before you replace this fuse.

i07459630

Headlights - Adjust

SMCS Code: 1429-025

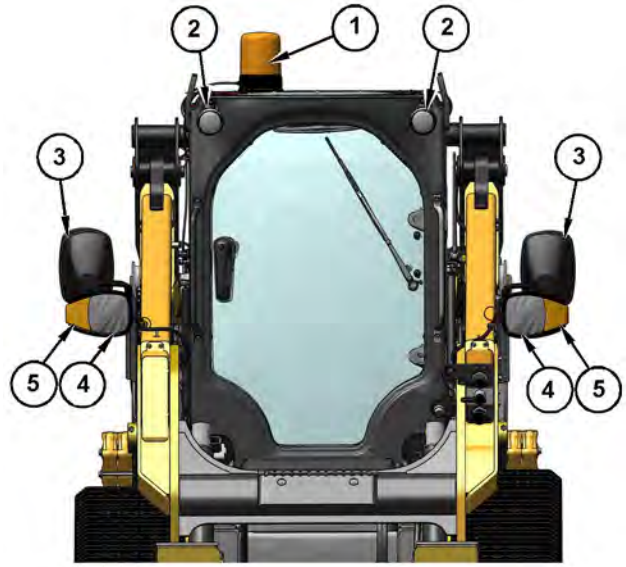

Illustration 457 g06329399

(1) Rotating Beacon
(2) Work Lights
(3) Rear View Mirror
(4) Headlights
(5) Turn Signals

Perform the following procedure to align the headlights:

1. Verify that the tires are inflated properly.

2. Position the machine in the following manner when you adjust the headlights:

a. Park the machine in a dark area.

b. Park the machine on level ground.

c. Face the machine toward a wall with 10 m (32.8 ft) between the wall and the face of the headlights.

3. Place a second person or 75 kg (165 lb) in the operator seat.
4. Turn on the headlights.
5. Cover one headlight.
6. Loosen the other headlight clamp.
7. Move the headlight so that the headlight is pointing straight ahead. Measure the height from the ground to the center of the headlight.
8. Twist the headlight so that the upper edge of the light that is shown on the wall is two-thirds of the height from the ground to the center of the headlight. Ensure that the line of the light that is shown on the wall is horizontal.
9. Tighten the headlight clamp.
10. Repeat the process for the other headlight.

i07458891

Hoses and Clamps - Inspect/ Replace
(C3.8 Engine Only)

SMCS Code: 1000; 7554-510; 7554-040

S/N: B621–Up

S/N: GJ21–Up

S/N: HX21–Up

S/N: L321–Up

S/N: JX31–Up

S/N: LB31–Up

S/N: R231–Up

S/N: TY31–Up

S/N: TY41–Up

S/N: TY61–Up

S/N: S381–Up

S/N: AN91–Up

S/N: BX91–Up

S/N: CY91–Up

S/N: DY91–Up

S/N: GX91–Up

S/N: TP91–Up

S/N: WKD1–Up

S/N: RWK1–Up

S/N: S1L1–Up

S/N: P3R1–Up

S/N: XES1–Up

Note: Only applies to engines with aftertreatment.

For each hose use the following procedure:

1. Inspect all hoses due to cracking, for softness next to the clamps, and for loose clamps.
2. Tighten any loose clamps.
3. Replace hoses that are cracked or soft. Use new clamps, when replacing hoses.

The following is a summary of all the hoses that require replacement.

Table 54

C3.8 Hose Replacement		
Location	**Hose**	**Quantity**
A	Turbo Oil Return	1
B	Closed Crankcase Breather (CCB)	6
C	Boost Pressure	1
D	Air Intake (non-XHP models)	1
E	Oil Cooler	2
F	NOx Reduction System (NRS) Cooler	3
G	NOx Reduction System (NRS) Valve	3
H	Cooler Bypass	1

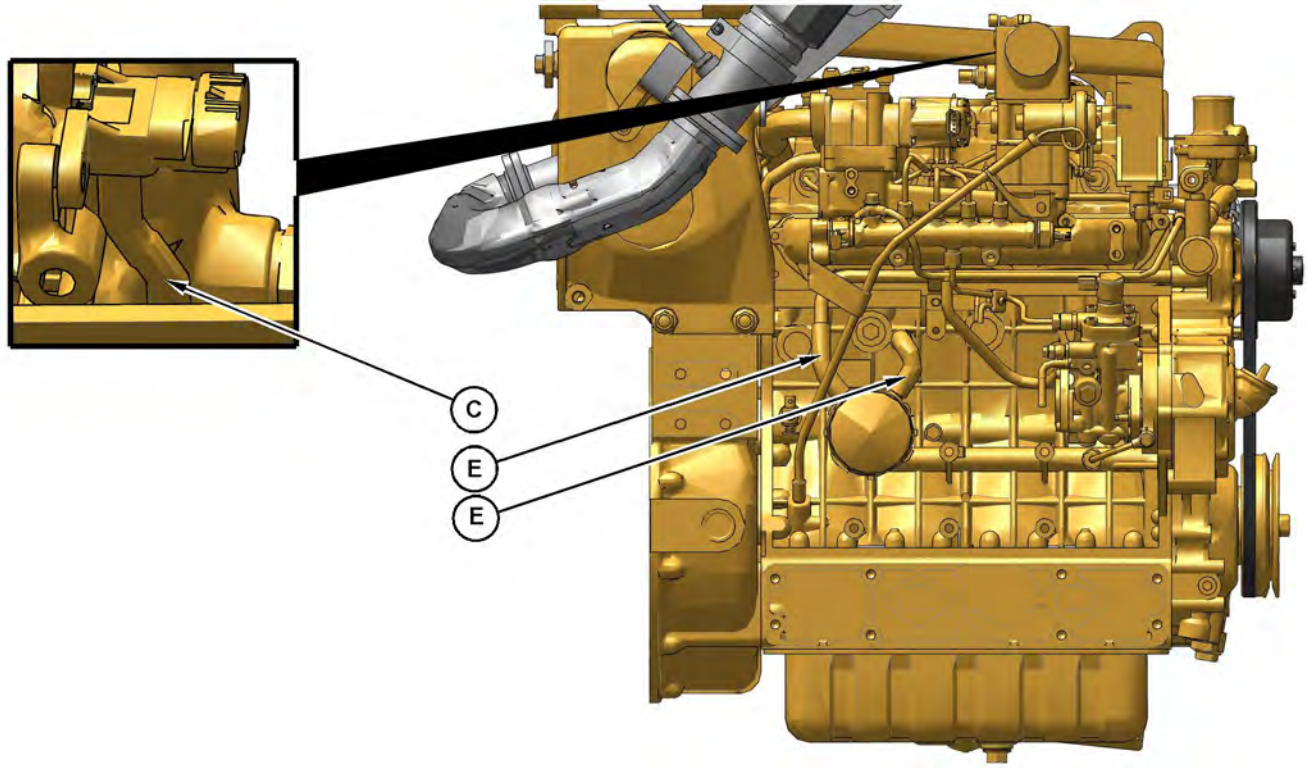

Illustration 458 g06328815
C3.8 Left Side

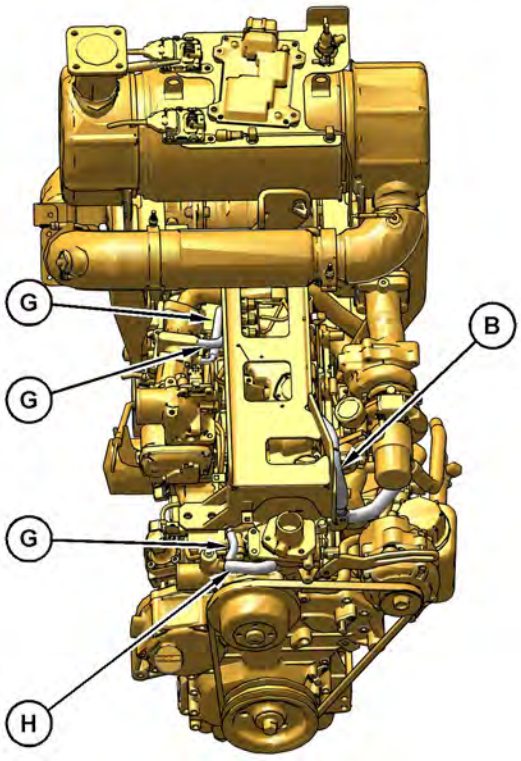

Illustration 459 g06410857

C3.8 Top View

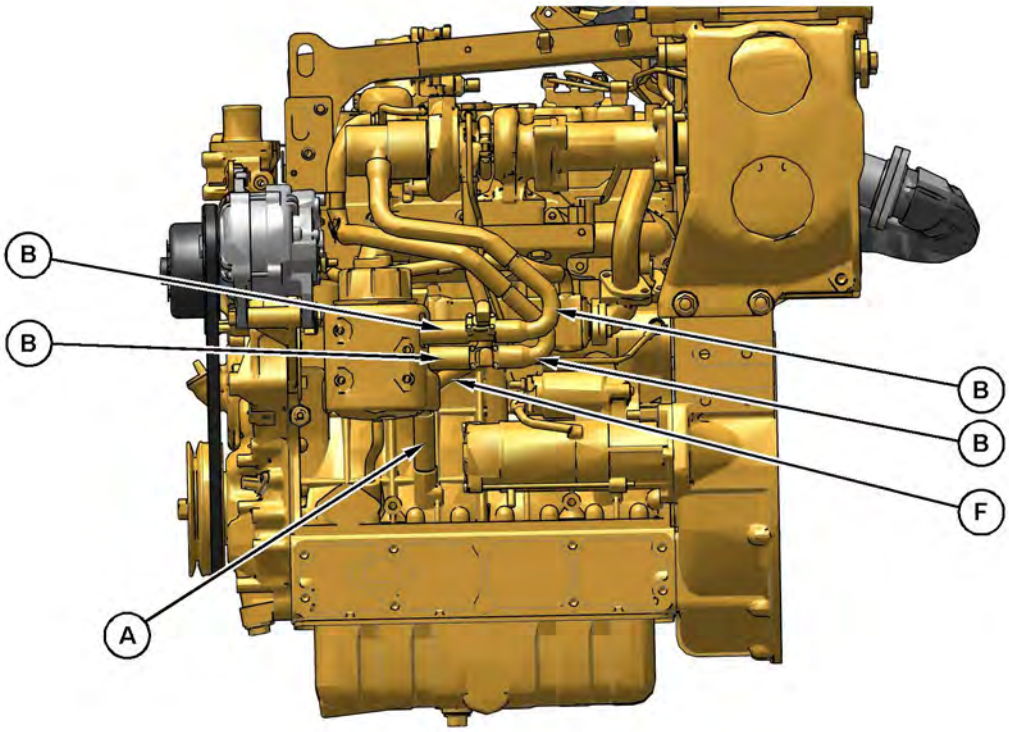

Illustration 460 g06328731
C3.8 Right Side View

i08227399

Hoses and Clamps - Inspect/ Replace
(C2.2 EU Stage V Engine Only)

SMCS Code: 1000; 7554-510; 7554-040

S/N: EK51–Up

S/N: GJ51–Up

S/N: WS51–Up

S/N: WKD1–Up

S/N: RWK1–Up

S/N: K5S1–Up

Note: Only applies to engines with aftertreatment.

For each hose use the following procedure:

1. Inspect all hoses due to cracking, for softness next to the clamps, and for loose clamps.
2. Tighten any loose clamps.
3. Replace hoses that are cracked or soft. Use new clamps, when replacing hoses.

Table 55

C2.2 Hose Replacement		
Location	**Hose**	**Quantity**
A	Turbo Oil Return	1
B	Closed Crankcase Breather (CCB)	3
E	Oil Cooler	2
F	NOx Reduction System (NRS) Cooler	2

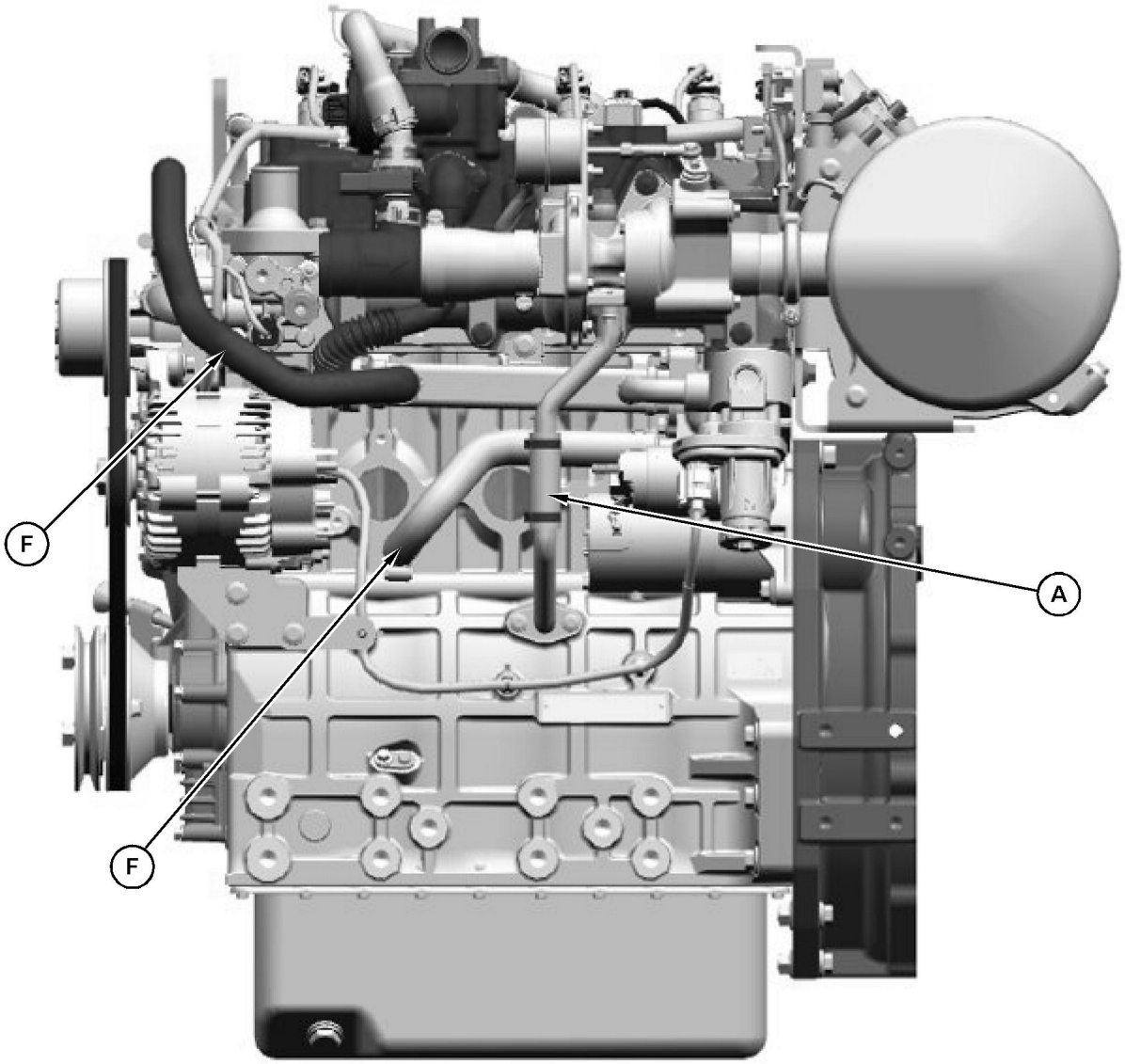

Illustration 461 g06592604
C2.2 Right Side

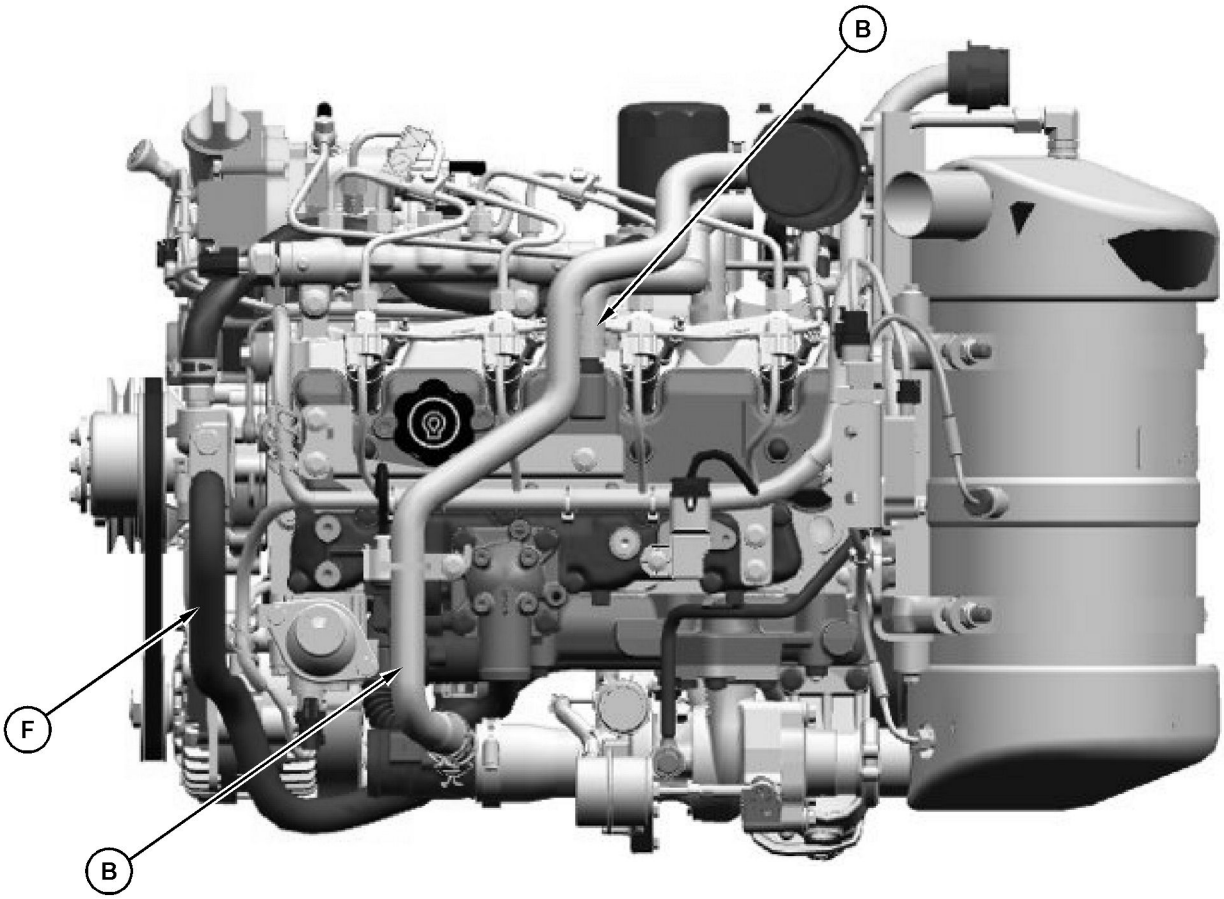

Illustration 462 g06592654
C2.2 Top View

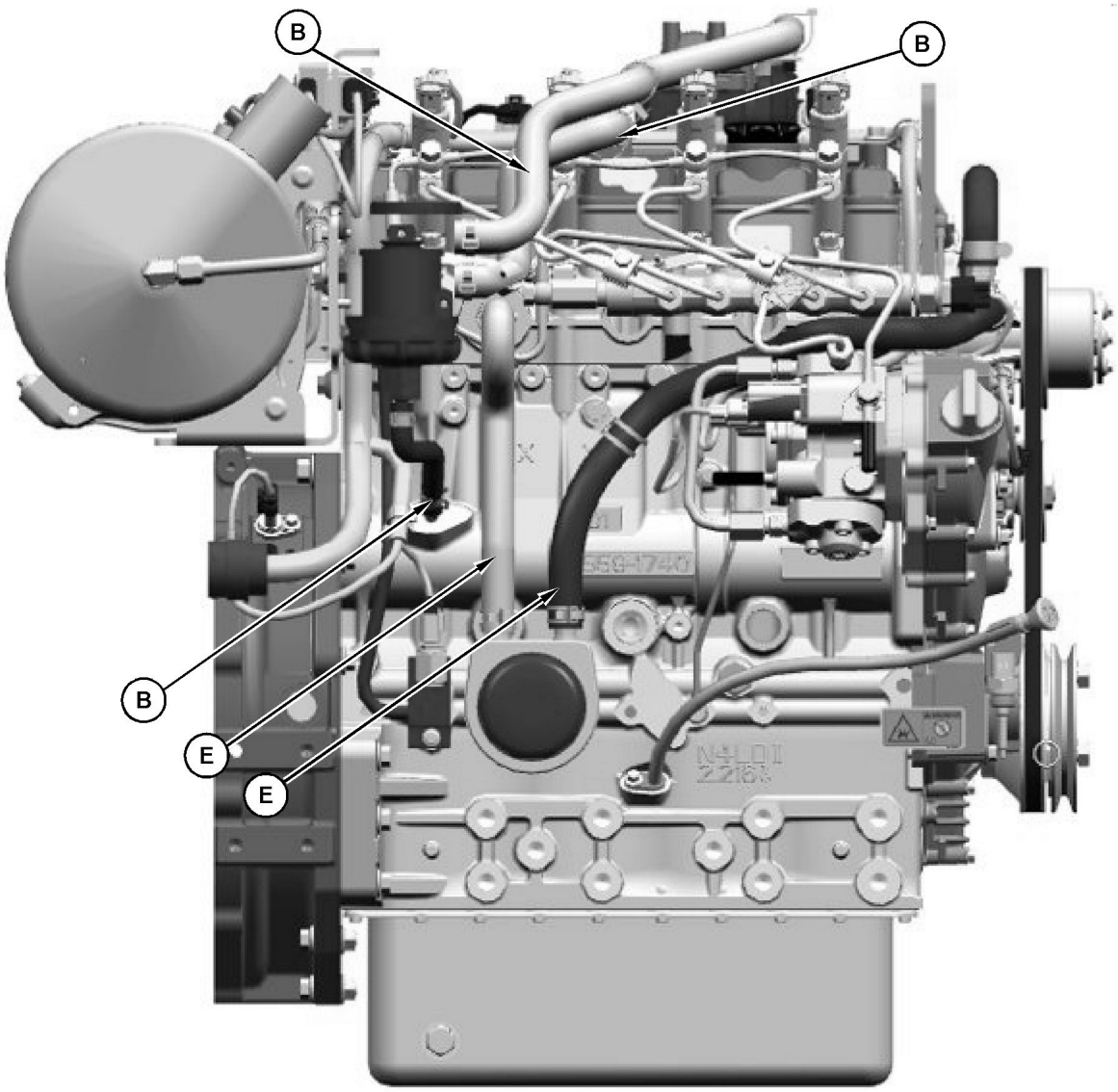

Illustration 463 g06592678
C2.2 Left Side

i08247715

Hoses and Clamps - Inspect/ Replace
(C2.2 EPA Tier 4 Final Engine Only)

SMCS Code: 1000; 7554-510; 7554-040

S/N: DX81–Up

S/N: HC91–Up

S/N: P9C1–Up

S/N: HRS1–Up

Note: Only applies to engines with aftertreatment.

For each hose use the following procedure:

1. Inspect all hoses due to cracking, for softness next to the clamps, and for loose clamps.
2. Tighten any loose clamps.
3. Replace hoses that are cracked or soft. Use new clamps, when replacing hoses.

Table 56

C2.2 Hose Replacement		
Location	**Hose**	**Quantity**
A	Turbo Oil Return	1
B	Closed Crankcase Breather (CCB)	3
E	Oil Cooler	2
F	NOx Reduction System (NRS) Cooler	2
H	Cooler Bypass	1

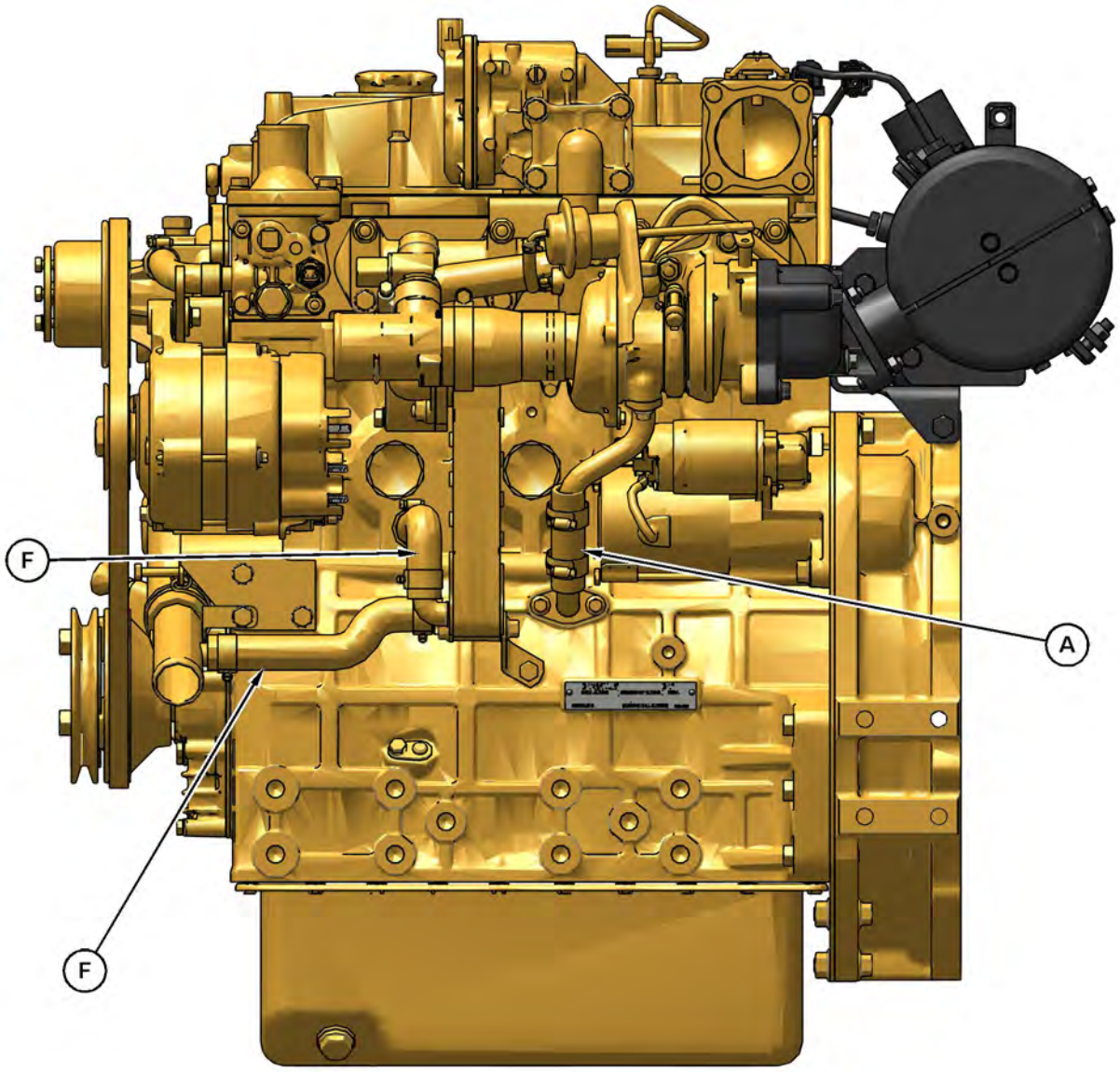

Illustration 464 g06384328
C2.2 Right Side

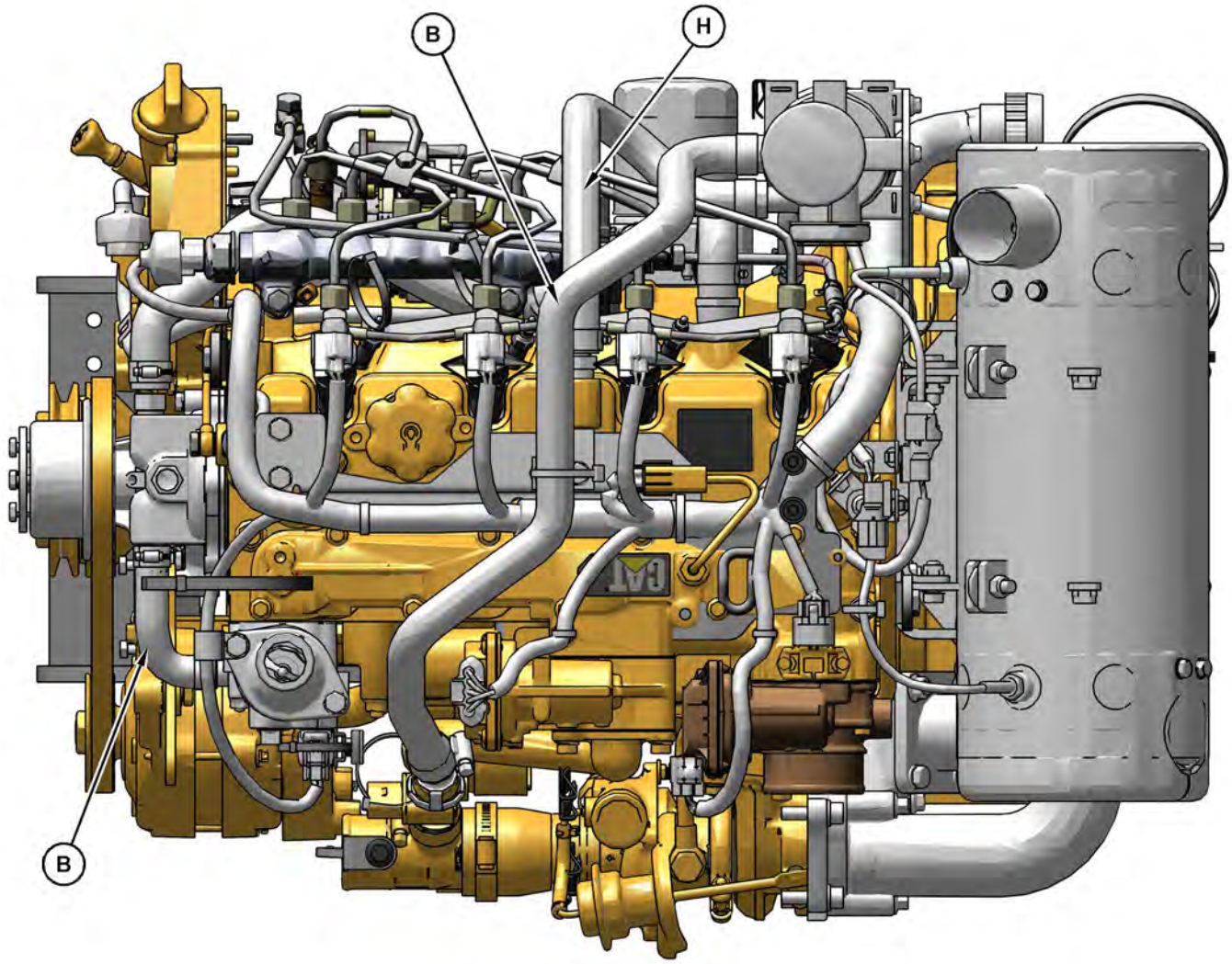

Illustration 465 g06384361

C2.2 Top View

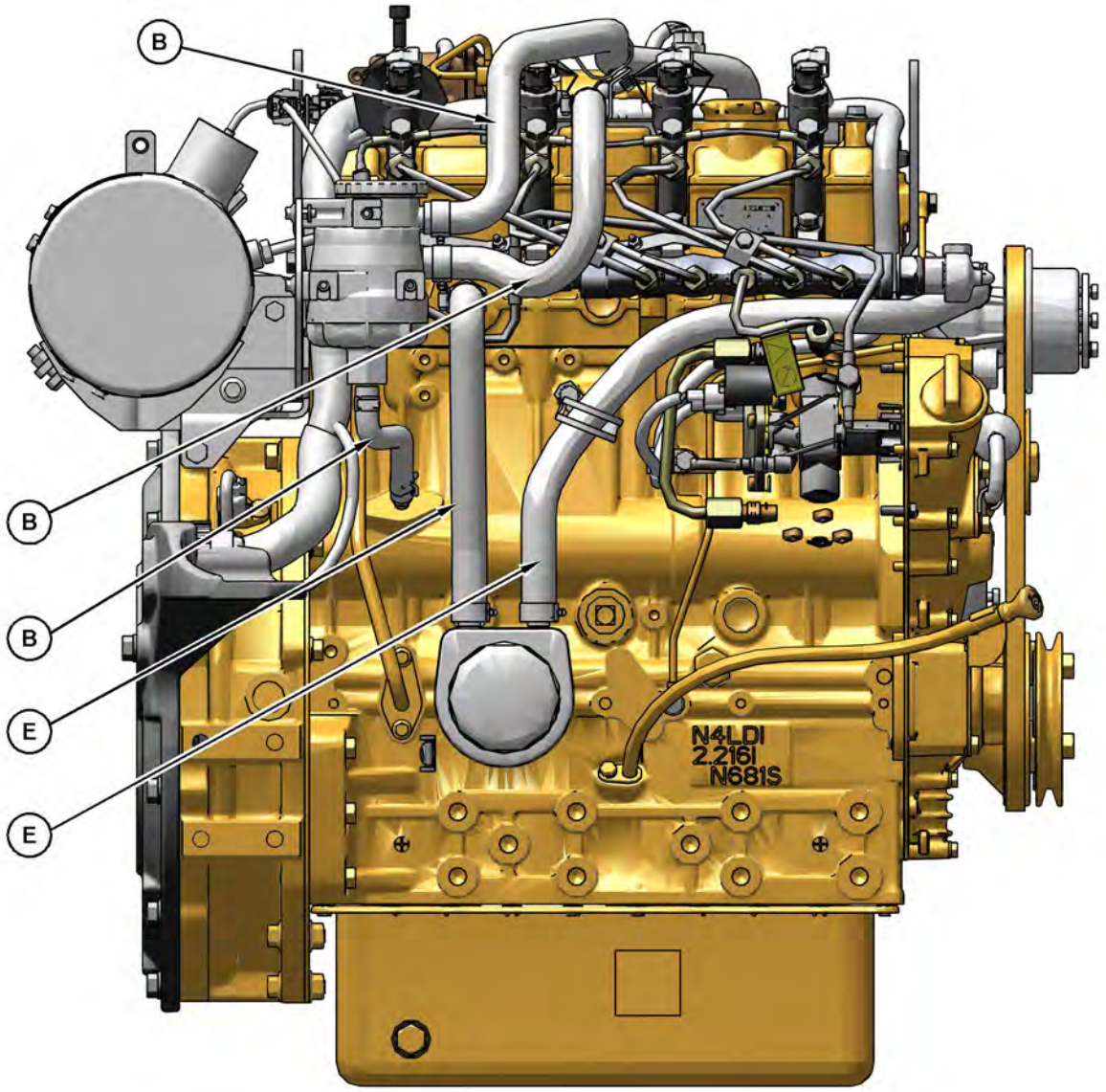

Illustration 466 g06384373
C2.2 Left Side

i08719496

Hoses and Clamps - Inspect/ Replace

(C3.3B Tier 4 Final & EU Stage V Engines Only)

SMCS Code: 1000; 7554-510; 7554-040

S/N: ZB21–Up

S/N: TP31–Up

S/N: TP41–Up

S/N: GK61–Up

S/N: KC61–Up

S/N: ME61–Up

S/N: PF61–Up

S/N: BT91–Up

S/N: CW91–Up

S/N: JX91–Up

S/N: RB91–Up

S/N: TE91–Up

S/N: T8A1–Up

S/N: WKD1–Up

S/N: S7E1–Up

S/N: W6E1–Up

S/N: Z9E1–Up

S/N: RWK1–Up

S/N: KXL1–Up

S/N: HSX1–Up

S/N: T9X1–Up

S/N: KEZ1–Up

S/N: T7Z1–Up

S/N: T9Z1–Up

Note: Only applies to engines with aftertreatment.

For each hose use the following procedure:

1. Prepare the machine for maintenance. Refer to Operation and Maintenance Manual , “Prepare the Machine for Maintenance".

2. Inspect all hoses due to cracking, for softness next to the clamps, and for loose clamps.

3. Tighten any loose clamps.

4. Replace hoses that are cracked or soft. Use new clamps, when replacing hoses.

The following is a summary of all the hoses that require replacement.

Table 57

C3.3B Hose Replacement		
Location	**Hose**	**Quantity**
A	Turbo Oil Return	1
B	Closed Crankcase Breather (CCB)	5
C	Boost Pressure	1
D	Air Intake	1
E	Oil Cooler	2
G	NOx Reduction System (NRS) Valve	3
F	NOx Reduction System (NRS) Cooler	1

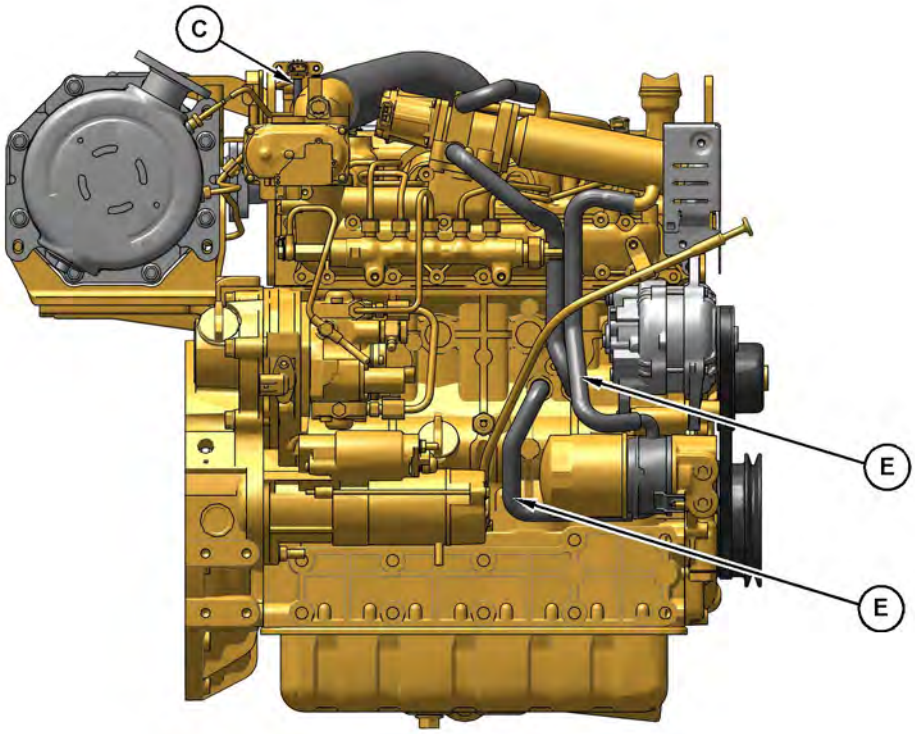

Illustration 467 g06328689

C3.3B Left Side

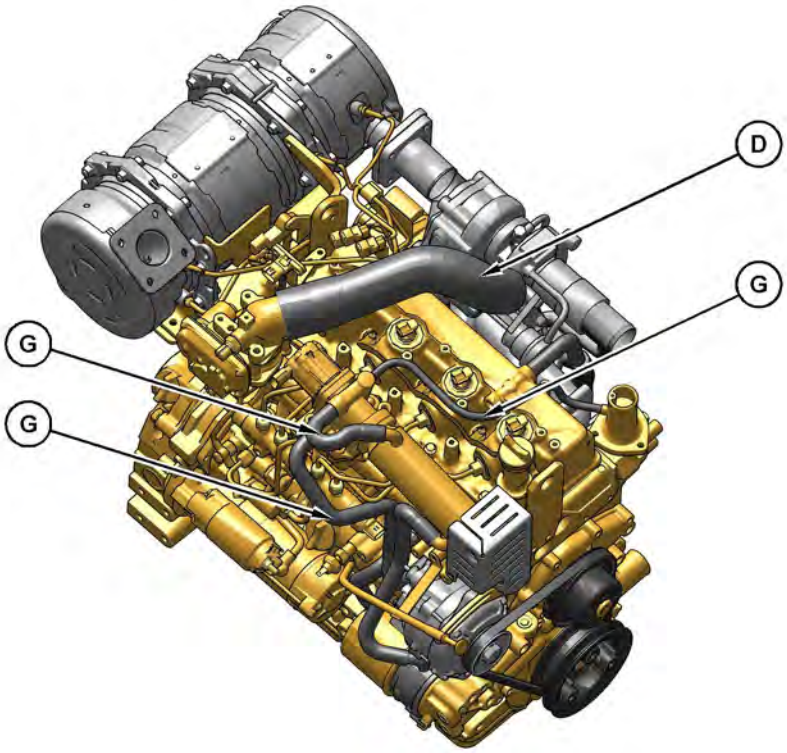

Illustration 468 g06328706

C3.3B Top View

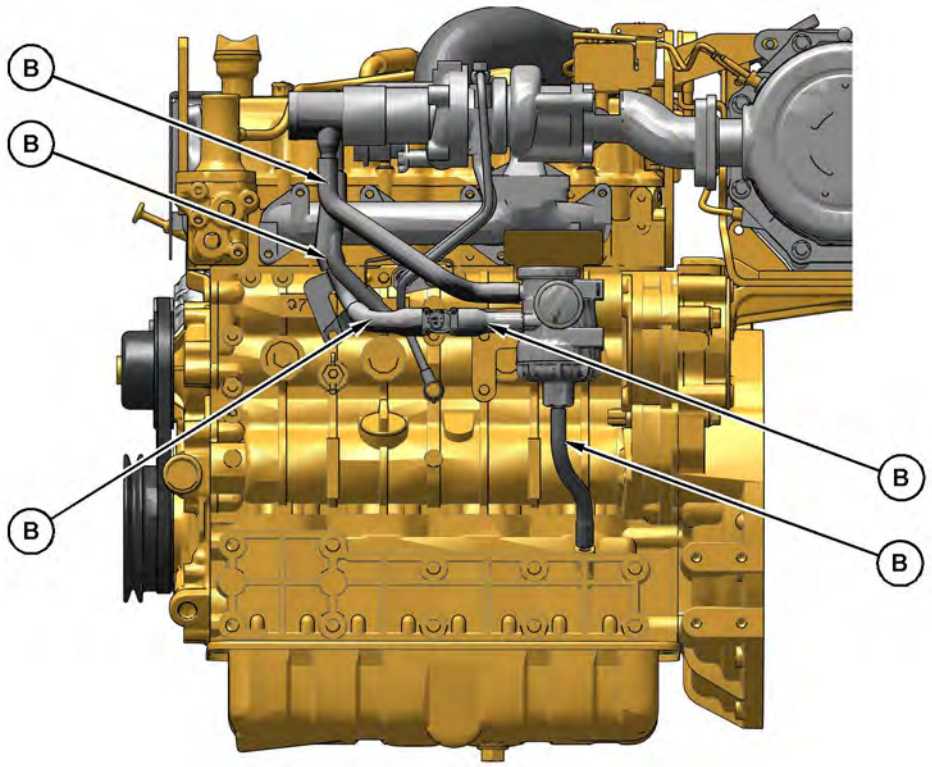

Illustration 469 g06406193
C3.3B Right Side

i08760276

Hydraulic System Oil - Change

SMCS Code: 5095-044

WARNING

Personal injury or death can result without releasing all of the hydraulic pressure.

Release all the pressure from the hydraulic system before any lines are disconnected.

NOTICE
Care must be taken to ensure that fluids are contained during performance of inspection, maintenance, testing, adjusting, and repair of the product. Be prepared to collect the fluid with suitable containers before opening any compartment or disassembling any component containing fluids.

Refer to Special Publication, PERJ1017, “Dealer Service Tool Catalog” for tools and supplies suitable to collect and contain fluids on Cat ® products.

Dispose of all fluids according to local regulations and mandates.

Selection of the Oil Change Interval

Your machine may be able to use an extended interval for the hydraulic oil. The standard change interval is listed in the Operation and Maintenance Manual, “Maintenance Interval Schedule”. The oil should be monitored during intervals of 500 hours.

The machine is built from the factory with Cat HYDO Advanced 10 oil. Cat HYDO Advanced 10 is the preferred oil for use in most Cat machine hydraulic and hydrostatic transmission systems when the ambient temperature is between −20° C (−4° F) and 40° C (104° F). Cat HYDO Advanced 10 has an SAE viscosity grade of 10W. The extended interval can be used if the following criteria are met.

Table 58

Hydraulic Oil Change		
Fluid Type	**500-Hour SOS Services**	**Interval**
Cat HYDO Advanced 10	No	3000
	Yes	6000
Non-Cat HYDO Advanced 10	No	2000
	Yes	4000

Note: If HYDO Advanced 10 is used but contaminated by 10% or more with other oils, follow the maintenance interval requirements for Non-HYDO Advanced 10.

Procedure for Changing the Hydraulic Oil

NOTICE
Care must be taken to ensure that fluids are contained during performance of inspection, maintenance, testing, adjusting, and repair of the product. Be prepared to collect the fluid with suitable containers before opening any compartment or disassembling any component containing fluids.

Refer to Special Publication, PERJ1017, “Dealer Service Tool Catalog” for tools and supplies suitable to collect and contain fluids on Cat ® products.

Dispose of all fluids according to local regulations and mandates.

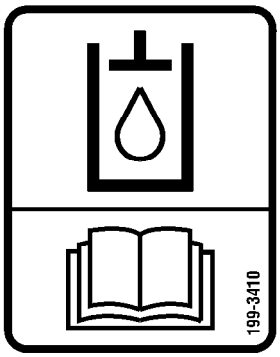

Illustration 470 g00956818

Note: This film is located near the hydraulic filler cap on machines that are filled with arctic oil.

Operate the machine for a few minutes to warm the hydraulic system oil.

Prepare the machine for maintenance. Refer to Operation and Maintenance Manual , “Prepare the Machine for Maintenance".

Type 1 Hydraulic System (Non - Metallic Tank)

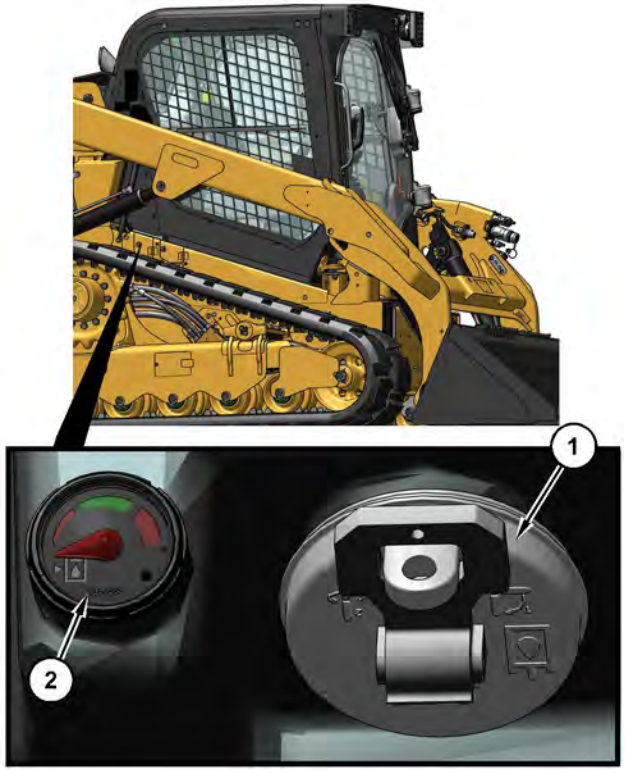

Illustration 471 g06325120
Type 1 Hydraulic System (Non - Metallic Tank)
(1) Hydraulic oil tank cap
(2) Sight Gauge

1. Remove the hydraulic oil tank cap (1).

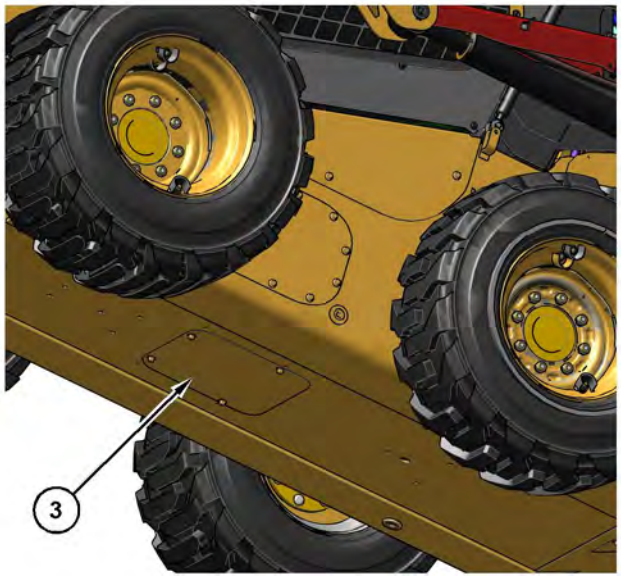

Illustration 472 g06406222

(3) Access panel

2. Remove the access panel (3) in the belly guard underneath the machine. Refer to "Lower Machine Frame - Clean".
3. The hose is on the right side. Pull the drain hose through the access hole in the belly guard. Remove the plug from the end of the drain hose. Drain the oil into a suitable container.
4. Install the drain plug into the drain hose. Tighten to 22 ± 3 N·m (16 ± 2 lb ft). Pull the drain hose back into the machine.

Type 2 Hydraulic System (Metallic Tank)

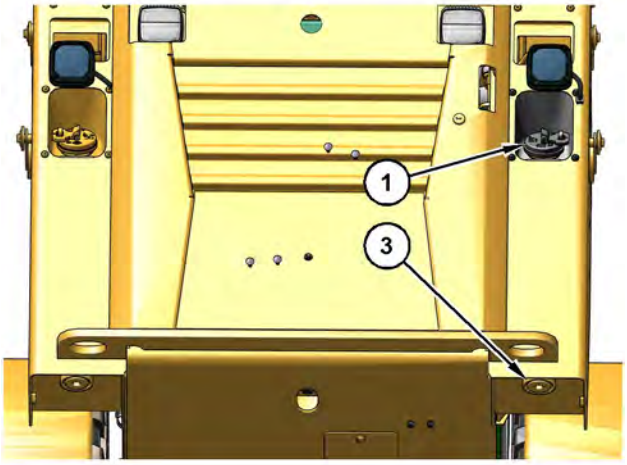

Illustration 473 g06406245

Type 2 Hydraulic System (Metallic Tank)

(1) Hydraulic oil tank cap
(3) Hydraulic oil tank drain plug

1. Prepare the machine for maintenance. Refer to Operation and Maintenance Manual , “Prepare the Machine for Maintenance".
2. Remove the hydraulic oil tank cap (1).
3. Remove the hydraulic oil tank drain plug (2).
4. Drain the oil into suitable container.
5. Install the drain plug into the tank. Tighten to 420 ± 63 N·m (310 ± 46 lb ft)

Hydraulic Oil Change

1. Change the hydraulic system filter. Refer to Operation and Maintenance Manual, “Hydraulic System Oil Filter - Change”.
2. Fill the hydraulic system oil tank. Refer to Operation and Maintenance Manual, “Lubricant Viscosities” and Operation and Maintenance Manual, “Capacities (Refill)” for the type of oil and the proper amount of oil.

3. Refer to Operation and Maintenance Manual, “Hydraulic System Oil Level - Check”. Maintain the hydraulic oil level approximately in the middle of the gauge (2).

   Check the oil level with the loader arms in the fully lowered position.

Note: The oil must be free of bubbles. If bubbles are present in the oil, air is entering the hydraulic system. Inspect the suction hoses and hose clamps.

4. Install the hydraulic tank filler cap (1).

i08760302

Hydraulic System Oil Filter - Replace

SMCS Code: 5068-510

WARNING

Hot oil and hot components can cause personal injury. Do not allow hot oil or hot components to contact skin.

NOTICE

Care must be taken to ensure that fluids are contained during performance of inspection, maintenance, testing, adjusting, and repair of the product. Be prepared to collect the fluid with suitable containers before opening any compartment or disassembling any component containing fluids.

Refer to Special Publication, PERJ1017, “Dealer Service Tool Catalog” for tools and supplies suitable to collect and contain fluids on Cat ® products.

Dispose of all fluids according to local regulations and mandates.

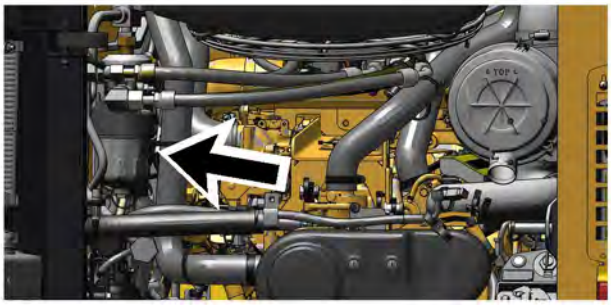

Illustration 474 g06325854

Location of Hydraulic Oil Filter

Illustration 475 g06325807

Hydraulic Filter

1. Prepare the machine for maintenance. Refer to Operation and Maintenance Manual , “Prepare the Machine for Maintenance".
2. Open the engine access door. Refer to "Access Doors and Covers".
3. Remove the Hydraulic tank filler cap. Refer to "Hydraulic System Oil Level - Check".
4. Remove drain plug from bottom of filter housing (canister) to drain oil from the housing. Drain into a suitable container.

Note: Use sockets or box end wrenches when servicing the hydraulic oil filter. Do not use an air wrench, open-end wrenches, or an adjustable wrench.

5. Unscrew canister from filter mounting base. Filter element will come out with housing. Squeeze the two tabs on the filter element to unlatch element from the canister.

Note: Squeeze the two tabs on filter element to unlatch element from the canister.

6. Inspect the O-ring or O-rings on the canister or mounting base for damage and replace O-ring(s)if needed.
7. Clean inside the filter mounting base and clean inside the canister.
8. Apply a thin coat of oil to the O-ring on the new filter element and the O-ring or O-rings on the canister or mounting base.
9. Insert the new filter element in the canister, ensuring that the two tabs are latched onto the side of the canister.

Note: Ensure that the two tabs are latched onto the side of the canister.

10. Install the canister onto the mounting base. Element will center-up as the canister is turned in. Torque to 40 ± 5 N·m (30 ± 4 lb ft)

11. Install the drain plug. Torque to 30 ± 5 N·m (22 ± 4 lb ft)

12. Maintain the hydraulic oil level to the proper level. Refer to "Hydraulic System Oil Level - Check". **Do not overfill the hydraulic tank.**

13. Inspect the gasket on the hydraulic tank filler cap for damage. Replace the hydraulic tank filler cap, if necessary. Install the hydraulic tank filler cap.

14. Close the engine access door.

i08760623

Hydraulic System Oil Level - Check

SMCS Code: 5095-535-FLV

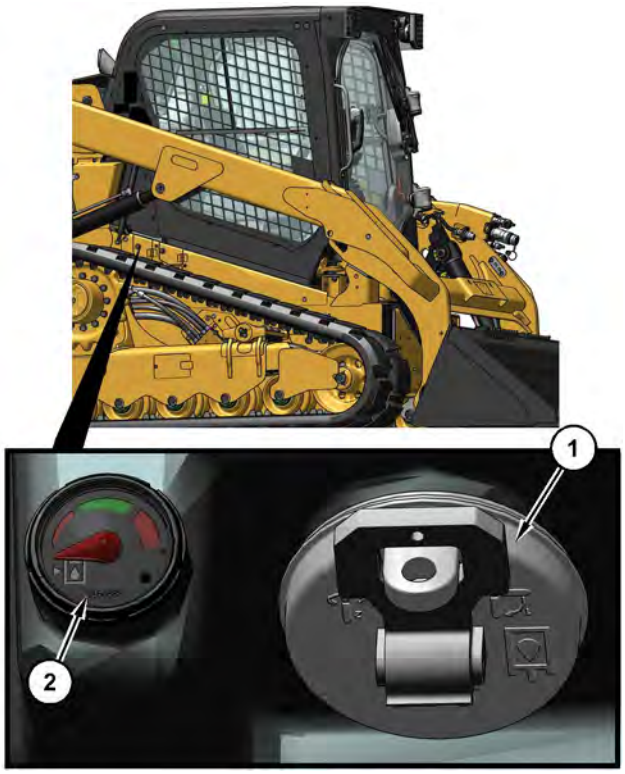

Illustration 476 g06325120

Type 1 Hydraulic Oil Level Gauge and Fill

(1) Hydraulic Oil Fill
(2) Hydraulic Oil Level Needle Gauge

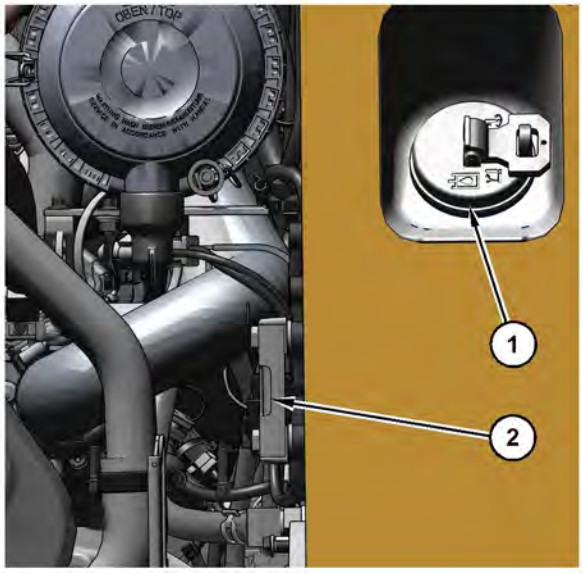

Illustration 477 g06325795

Type 2 Hydraulic Oil Level Gauge and Fill

(1) Hydraulic Oil Fill
(2) Hydraulic Oil Sight Gauge

1. Prepare the machine for maintenance. Refer to Operation and Maintenance Manual , “Prepare the Machine for Maintenance".

2. Wait for about 5 minutes before checking the level of the hydraulic oil.

3. Use the hydraulic oil filler (1) to top off the hydraulic oil.

4. Maintain the oil level to the green area of the gauge (Type 1) or midway between the upper and lower gauge lines (Type 2). If hydraulic work tools are used often, you may fill closer to the upper gauge limit to account for potential work tool leakage. Do not overfill the hydraulic tank. **Do not overfill the hydraulic tank.**

i08760637

Hydraulic System Oil Sample - Obtain

SMCS Code: 5050-008; 7542-008

Prepare the machine for maintenance. Refer to Operation and Maintenance Manual , “Prepare the Machine for Maintenance".

Open the rear access door. Refer to Operation and Maintenance Manual, “Access Doors and Covers” for information about the rear door.

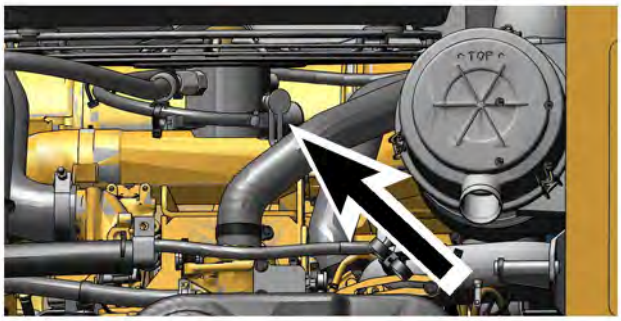

Illustration 478 g06325846

The location of the sampling port for the hydraulic oil is on the cooling fan.

i07444572

Hydraulic Tank Breather - Replace

SMCS Code: 5050-510-BRE; 5056-510-BRE

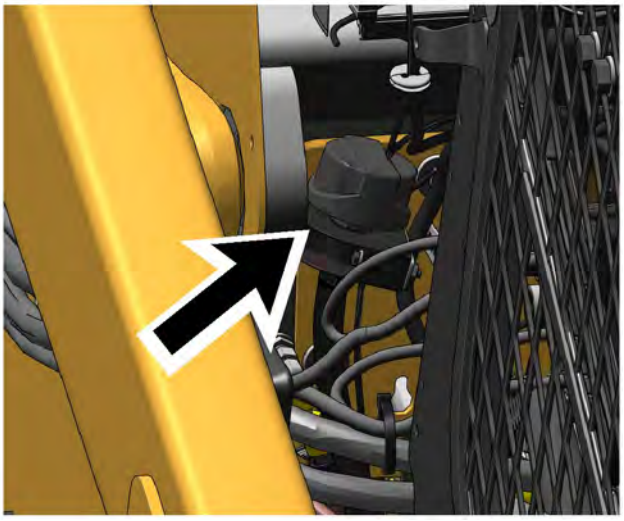

Illustration 479 g06325364

The breather for the hydraulic tank is located remotely behind the cab on the right side.

1. Tilt the cab upward. Refer to the Operation and Maintenance Manual, “Cab Tilting” for more information.
2. Remove the breather.
3. Install the new breather and tighten to 11 ± 1 N·m (8.1 ± 0.7 lb ft).
4. Tilt the cab downward.

i07434419

Lift Arm and Cylinder Linkage - Lubricate

SMCS Code: 5102-086-BD; 6107-086-BD

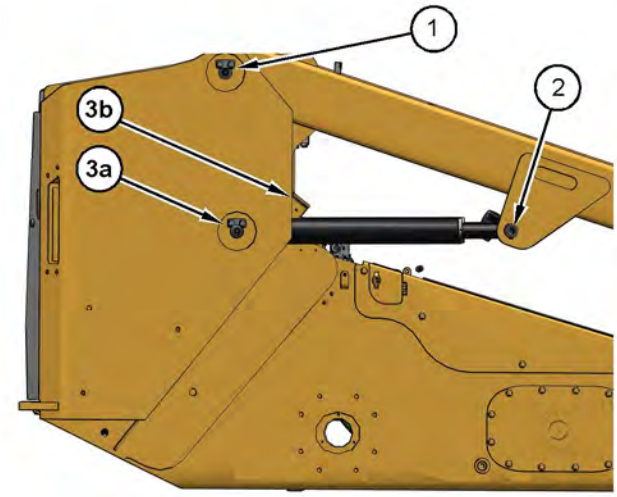

Illustration 480 g06322741

Radial Lift

(1) Lift Arm Pivot
(2) Lift Cylinder Rod End
(3a) Head End Fitting
(3b) Alternate Location Remote Head End Fitting

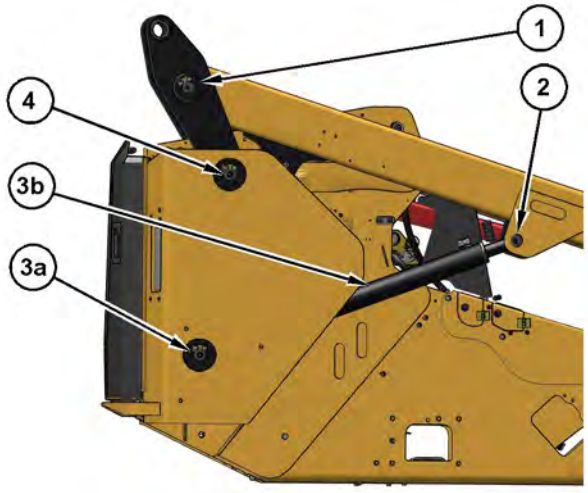

Illustration 481 g06322760

Vertical Lift

(1) Lift Arm Pivot
(2) Lift Cylinder Rod End
(3a) Head End Fitting
(3b) Alternate Location Remote Head End Fitting
(4) Link Arm

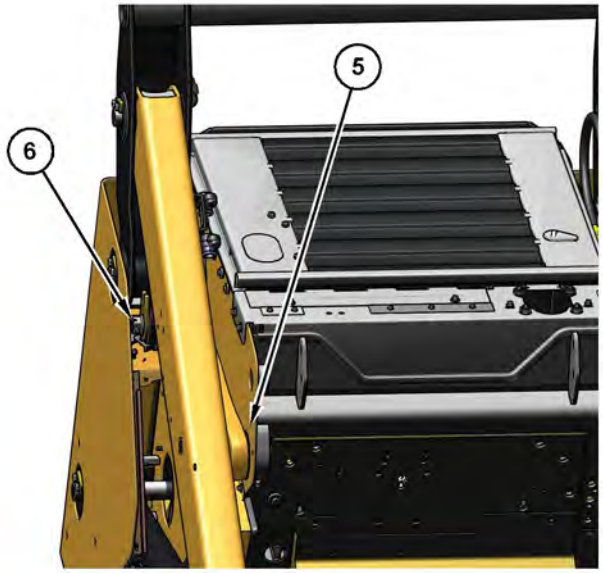

Illustration 482 g06322785

The Link Arm is located behind the loader arm.

(5) Mounting for Link Pin
(6) Rear of Link Arm

Apply lubricant to all the grease fittings on both sides.

Repeat the process for the opposite side of the machine.

i07433357

Lower Machine Frame - Clean

SMCS Code: 7050-070

1. Tilt the cab upward. Refer to Operation and Maintenance Manual, “Cab Tilting”.

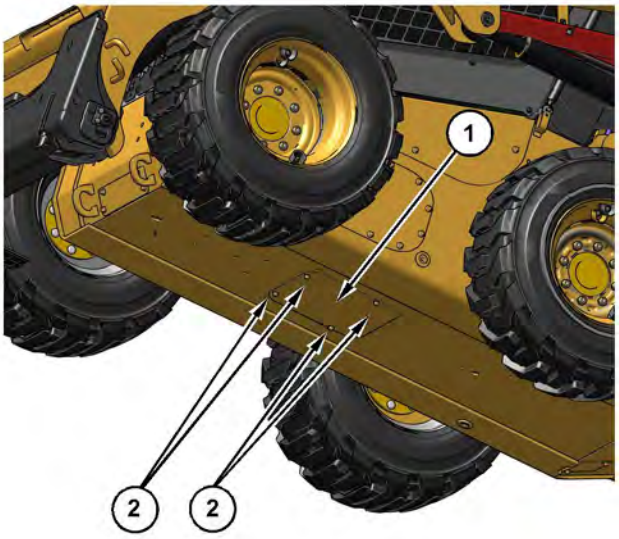

Illustration 483 g06322428

2. The access panel (1) is located in the frame underneath the machine.

3. Remove the four retaining bolts (2).

4. Slide the panel forward or slide the panel rearward. Some models allow the panel to drop down from the machine. Use caution while lowering the panel, as accumulated debris may make the panel substantially heavier.

5. Remove any debris or dirt from inside the frame.

6. Reinstall the access panel.

7. Tilt the cab downward.

Note: Some models may have secondary clean out plates (3) for localized debris removal.

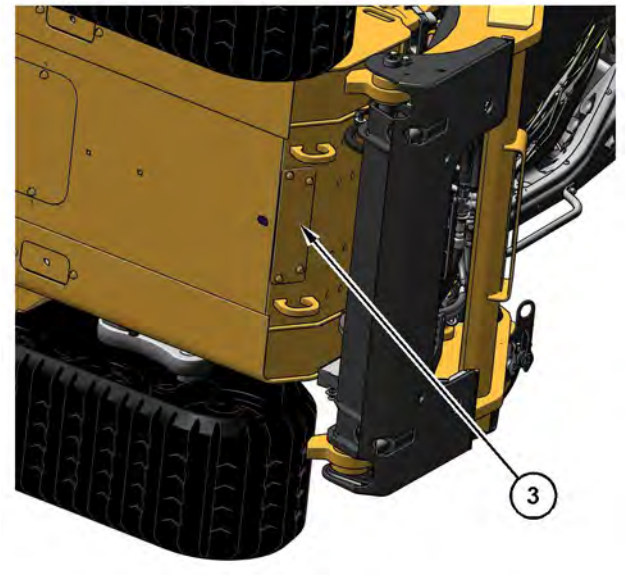

Illustration 484 g06322452

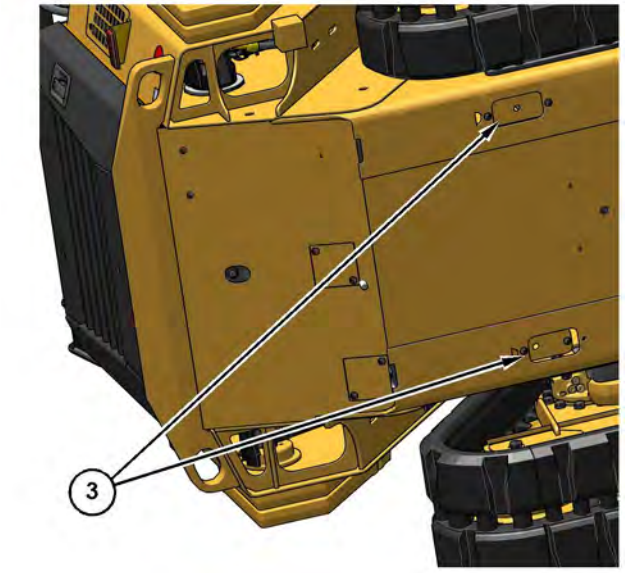

Illustration 485 g06322449

i07378240

Quick Coupler - Clean/Inspect

SMCS Code: 6129-070; 6129-040

WARNING

Personal injury or death can result from improperly checking for a leak.

Always use a board or cardboard when checking for a leak. Escaping air or fluid under pressure, even a pin-hole size leak, can penetrate body tissue causing serious injury, and possible death.

If fluid is injected into your skin, it must be treated immediately by a doctor familiar with this type of injury.

Note: Do not weld on the quick coupler without consulting your Cat dealer.

1. Clean the quick coupler prior to inspection to inspect the quick coupler properly.

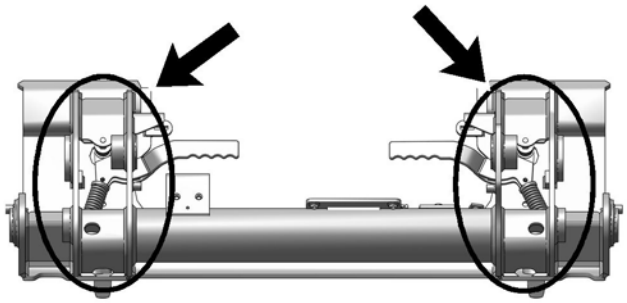

Illustration 486 g06408713

Back side of the manual quick coupler. The lift arm and the tilt cylinder are removed for clarity.

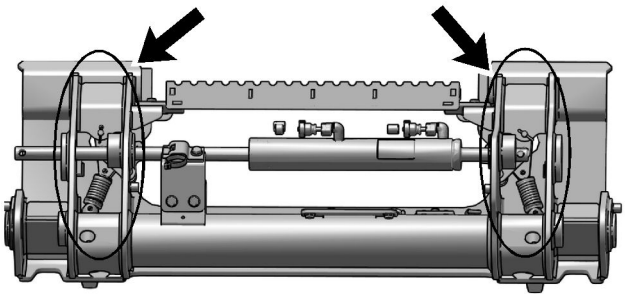

Illustration 487 g06408712

Back side of the hydraulic quick coupler. The lift arm and the tilt cylinder are removed for clarity.

2. Tilt the quick coupler all the way forward to clean the debris away from the pins.

3. Move the quick coupler levers. Ensure that the levers are not bent or broken.

4. Make sure that the coupler pins extend through the bottom of the quick coupler assembly. Check the pins for wear and check the pins for damage.

5. Check the top edges of the quick coupler assembly for wear or for damage. Check the face of the quick coupler assembly for wear or for damage.

6. Inspect the components inside the quick coupler for the following problems: loose bolts, oil leaks, broken parts, missing parts and cracked components

7. Inspect the hoses for damage or abrasion. Check for loose connections. Repair any worn components or replace any worn components. Repair any leaking components.

8. Inspect the steel material of the quick coupler for cracks.

Note: Perform all repairs before placing the quick coupler back into operation.

i04456539

Radiator Core - Clean

SMCS Code: 1353-070-KO

The radiator is located at the rear of the machine above the engine compartment.

Note: Adjust the frequency of cleaning according to the effects of the operating environment. If equipped, clean the aftercooler core when you clean the radiator core.

1. Stop the engine. Open the engine access door. Refer to Operation and Maintenance Manual, “Access Doors and Covers”.

2. Tilt the radiator guard upward. Refer to Operation and Maintenance Manual, “Radiator Tilting”.

WARNING

Personal injury can result from air pressure.

Personal injury can result without following proper procedure. When using pressure air, wear a protective face shield and protective clothing.

Maximum air pressure at the nozzle must be less than 205 kPa (30 psi) for cleaning purposes.

NOTICE

When you are using compressed air or high pressure water to clean the radiator fins, ensure that the air or water is directed parallel to the fins. If the compressed air or high pressure water is not directed parallel to the radiator fins, the radiator fins could be bent or damaged.

Note: Pressurized air is the preferred method for removing loose debris. Hold the nozzle approximately 6 mm (0.25 inch) away from the fins. Slowly move the air nozzle in a direction that is parallel with the tubes. The air nozzle should point in the opposite direction of the flow of the fan to remove debris between the tubes. Pressurized water may also be used for cleaning. The maximum water pressure for cleaning purposes must be less than 275 kPa (40 psi). Use pressurized water in order to soften mud. Use a degreaser and steam for removal of oil and grease. Wash the core with detergent and hot water. Thoroughly rinse the core with clean water.

3. Clean the radiator core from the top toward the fan.

Note: If parts of the cooling system appear to be damaged or if parts of the cooling system are repaired, a leak test is highly recommended. Consult your Caterpillar dealer for the most current information about the cooling system.

4. After cleaning, start the engine and accelerate the engine to high idle rpm. The fan will help in the removal of debris and drying of the core. Stop the engine. Use a light bulb behind the core in order to inspect the core for cleanliness. Repeat the cleaning, if necessary.

5. Inspect the fins and tubes of the radiator core for damage. Some fins and tubes may be worn from abrasive material that has passed through the radiator core . Bent fins may be opened with a “comb”.

NOTICE
Do not clean a rotating fan with high pressure water. Fan blade failure can result.

6. Remove any dirt or debris from the fan, the fan hub, the oil cooler, the radiator guard, and the fan guard.

Note: Dirt or debris on the cooling fan can cause an imbalance.

7. Tilt the radiator guard downward.

8. Close the engine access door.

i07716952

Rollover Protective Structure (ROPS) and Falling Object Protective Structure (FOPS) - Inspect

SMCS Code: 7323-040; 7325-040

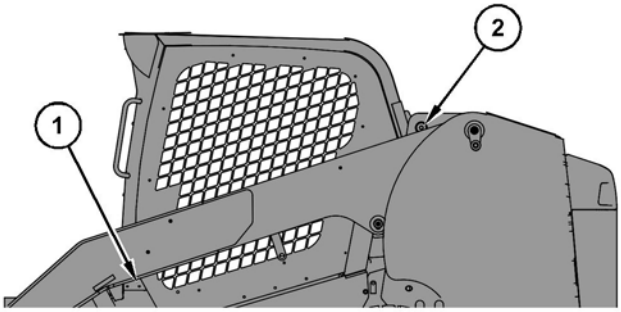

Illustration 488 g06408726

1. Inspect the ROPS for loose bolts. Tighten the bolts (1) to the following torque 125 ± 10 N·m (92 ± 7.5 lb ft). Check the hinge on the cab (2). Check the ROPS and the FOPS for damaged bolts or missing bolts. Replace any damaged bolts or missing bolts with original equipment parts only.

2. Operate the machine on a rough surface. Replace the ROPS mounting supports if the ROPS emits a noise. Replace the ROPS mounting supports if the ROPS rattles. Refer to Operation and Maintenance Manual, “Cab Tilting” for a description of the mounting support.

Consult your Caterpillar dealer for inspection of any potential damage or repair of any damage to any Operator Protective structure, including ROPS, FOPS, TOPS, OPS, and OPG. Refer to Special Instruction SEHS6929 Inspection, “Maintenance, and Repair of Operator Protective Structures (OPS) and Attachment Installation Guidelines for All Earthmoving Machinery”, for more information.

i04423622

Seat Belt - Inspect

SMCS Code: 7327-040

Always inspect the condition of the seat belt and the condition of the seat belt mounting hardware before you operate the machine. Replace any parts that are damaged or worn before you operate the machine.

Illustration 489 g02620101
Typical example

Inspect buckle (1) for wear or for damage. If the buckle is worn or damaged, replace the seat belt.

Inspect seat belt (2) for webbing that is worn or frayed. Replace the seat belt if the webbing is worn or frayed.

Inspect all seat belt mounting hardware for wear or for damage. Replace any mounting hardware that is worn or damaged. Make sure that the mounting bolts are tight.

If your machine is equipped with a seat belt extension, also perform this inspection procedure for the seat belt extension.

Contact your Cat dealer for the replacement of the seat belt and the mounting hardware.

Note: The seat belt should be replaced within 3 years of the date of installation. A date of installation label is attached to the seat belt retractor and buckle. If the date of installation label is missing, replace belt within 3 years from the year of manufacture as indicated on belt webbing label, buckle housing, or installation tags (non-retractable belts).

i06970675

Seat Belt - Replace

SMCS Code: 7327-510

The seat belt should be replaced within 3 years of the date of installation. A date of installation label is attached to the seat belt retractor and buckle. If the date of installation label is missing, replace the belt within 3 years from the year of manufacture as indicated on the belt webbing label, buckle housing, or installation tags (non-retractable belts).

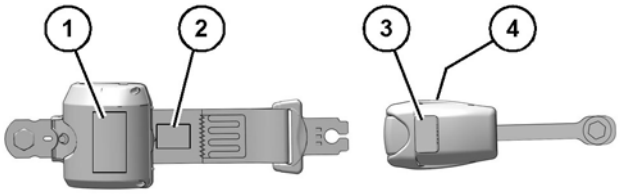

Illustration 490 g06183390

(1) Date of installation (retractor)
(2) Year of manufacture (tag) (fully extended web)
(3) Date of installation (buckle)
(4) Year of manufacture (underside) (buckle)

Consult your Cat dealer for the replacement of the seat belt and the mounting hardware.

Determine the age of a new seat belt before installing on seat. A manufacture label is on the belt webbing and imprinted on the belt buckle. Do not exceed the install by date on the label.

A complete seat belt system should be installed with new mounting hardware.

Date of installation labels should be marked and affixed to the seat belt retractor and buckle.

Note: Date of installation labels should be permanently marked by punch (retractable belt) or stamp (non-retractable belt).

If your machine is equipped with a seat belt extension, also perform this replacement procedure for the seat belt extension.

i07378279

Sprocket - Inspect
(MTL Only)

SMCS Code: 4164-040

Note: Operating the machine in conditions that are muddy or sandy will cause accelerated wear on the sprocket and other undercarriage components. Clean the undercarriage of the machine daily to maximize component life.

Sprocket Inspection

Note: Sleeves that do not meet the minimum thickness or do not turn freely may cause unnecessary wear on the drive lugs on the rubber track.

Remove the Sprocket

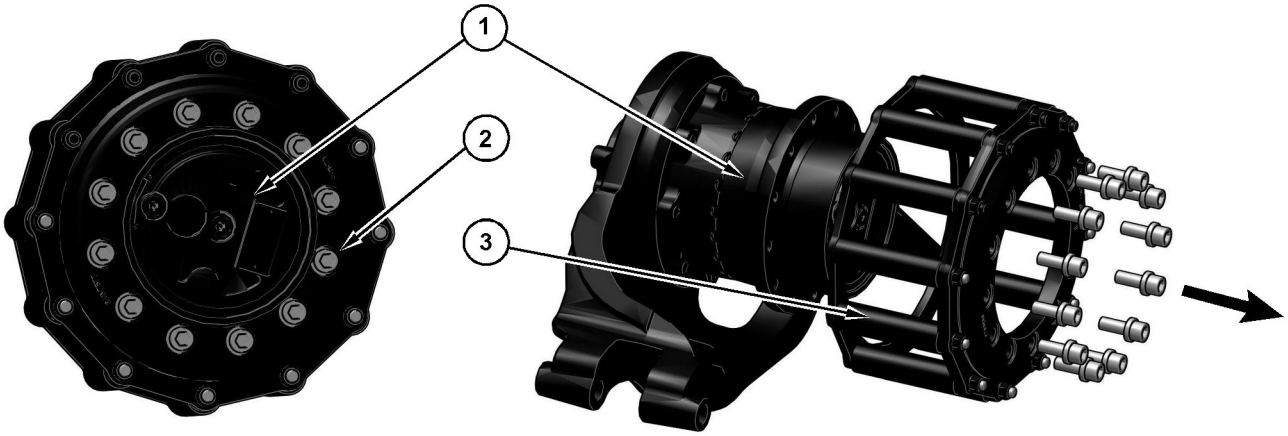

Illustration 491 g06321824

(1) Drive motor (2) Bolts and washers (3) Sprocket assembly

Note: To service the sprocket, the tracks must be loosened. Refer to Operation and Maintenance Manual, “Track (Rubber) - Inspect/Adjust” for the procedure.

1. Remove the 12 bolts and the 12 washers that hold the sprocket assembly to the drive motor.

2. Slide the sprocket assembly off the drive motor.

Sleeves and Rings

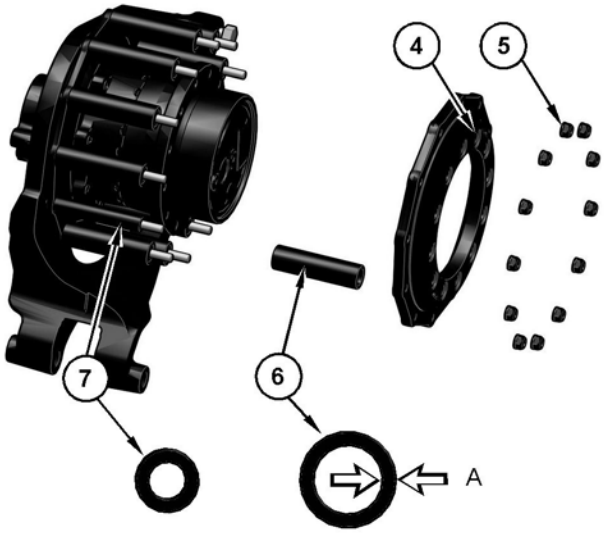

Illustration 492 g06322017

(4) Sprocket mounting ring
(5) Washers and Locknuts
(6) Outer sleeve
(7) Inner sleeve

The sprocket is equipped with two types of sleeves.

- Inner Sleeves (6)

- Outer sleeves (5)

The outer sleeves are free to rotate on the inner sleeves . The sleeves are held in position by the sprocket mounting ring.

Note: There are many parts in the sprocket assembly. Remove the sprocket completely from the machine to work on the sprocket. Use a clean, flat surface to disassemble the sprocket, and assemble the sprocket.

1. Remove the 12 locknuts and washers that hold the sprocket mounting ring in place.
2. Remove the ring.
3. Remove the outer sleeves and the inner sleeves.
4. Measure thickness (A) for the outer sleeves. If the thickness of the outer sleeves measures less than 3 mm (0.12 inch), replace the sleeves. Sleeves that do not meet the minimum thickness or turn freely may cause unnecessary wear on the drive lugs on the rubber track.
5. When you replace the outer sleeves, rotate the inner sleeves for 180°. If the inner sleeves have already been rotated, replace the inner sleeves.
6. Repeat steps 2 through 5 for each set of sleeves.
7. The sprocket mounting rings of the drive sprocket will wear from the rotation of the outer sleeves. Measure the thickness of the inner rings and outer rings. If the thickness of the inner ring or outer ring measures less than 4.75 mm (0.19 inch), replace the ring.
8. Install the sleeves and the rings.
9. Install the new locknuts. **Do not reuse the locknuts.** Tighten the locknuts to a torque of 70 ± 5 N·m (51.6 ± 3.7 lb ft) in a star pattern. Turn the nuts an extra 120 degrees ± 5 degrees in the same star pattern.
10. Install the sprocket on the drive motor. Tighten the bolts to a torque of 270 ± 40 N·m (199 ± 30 lb ft).

Track

Tighten the track to the proper tension. Refer to Operation and Maintenance Manual, “Track (Rubber) - Inspect/Adjust” for the procedure.

i07473901

Sprocket - Inspect
(CTL - Steel Track)

SMCS Code: 4164-040

Note: Operating the machine in conditions that are muddy or sandy will cause accelerated wear on the sprocket and other undercarriage components. Clean the undercarriage of the machine daily to maximize component life.

Inspect

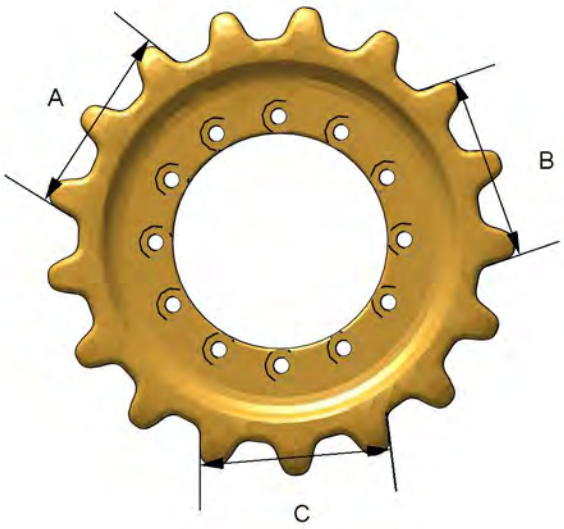

Illustration 493 g06321984
Track sprocket

1. Measure the sprocket teeth in three places as shown in illustration 493 .
2. Calculate the average of the 3 measurements.
3. If the average of the 3 measurements is less than the 50% wear limit listed below, relocate sprocket to opposite side of machine. Follow the steps in the "Relocate" section. If the average of the 3 measurements is less than the 75% wear limit listed below, replace the sprocket. Follow the steps in the "Replace" section.

Table 59

	CTL Rubber	CTL Steel
Action	**Track**	**Track**
50% Wear Relocate Limit	178 mm	162 mm
	(7.0 inch)	(6.4 inch)
75% Wear Replace Limit	165 mm	158 mm
	(6.5 inch)	(6.2 inch)

Relocate

1. Remove the track on both sides of the machine.
2. Remove the sprocket on the left side of the machine. Move the sprocket to the right side.
3. Remove the sprocket on the right side of the machine. Move the sprocket to the left side.
4. Install the sprockets. Tighten the bolts to the proper torque.
5. Install the track on both sides of the machine.

Replace

1. Remove the track on both sides of the machine.
2. Remove the sprocket on the left side of the machine. Install the new sprocket.
3. Tighten the bolts to the proper torque.
4. Remove the sprocket on the right side of the machine. Install the new sprocket.
5. Tighten the bolts to the proper torque.
6. Install the track on both sides of the machine.

i07431938

Sprocket Retaining Nuts - Check
(MTL Only)

SMCS Code: 4164-535-NT

Illustration 494 g06321185

(1) Sprocket retaining nut

Check the torque on the nuts for new sprockets or for sprockets that have been reinstalled after every 10 service hours until the specified torque is maintained.

Check the nuts on both sprockets. Use a star pattern when you tighten the nuts.

Tighten the nuts to a torque of 270 ± 40 N·m (199 ± 30 lb ft).

i07378289

Sprocket Sleeve - Inspect
(MTL Only)

SMCS Code: 4164-040-ZV

Note: Operating the machine in conditions that are muddy or sandy will cause accelerated wear on the sprocket and other undercarriage components. Clean the undercarriage of the machine daily to maximize component life. Sleeves that do not meet the minimum thickness or that do not turn freely may cause unnecessary wear on the drive lugs on the rubber track.

Illustration 495 g06321178

Single Lug Drive System

Check the outer sleeves to ensure that the sleeves rotate freely. If the sleeves do not rotate freely, refer to Operation and Maintenance Manual, “Sprocket - Inspect” for information about the inspection of the sprocket assembly.

i07432461

Tilt Cylinder Bearings and Bucket Linkage Bearings - Lubricate

SMCS Code: 5104-086-BD; 6107-086-BD

Wipe all the grease fittings before you apply lubricant.

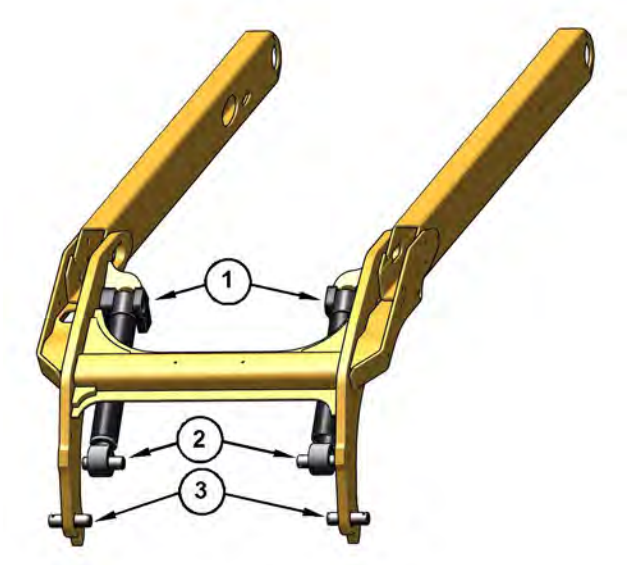

Illustration 496 g06321640

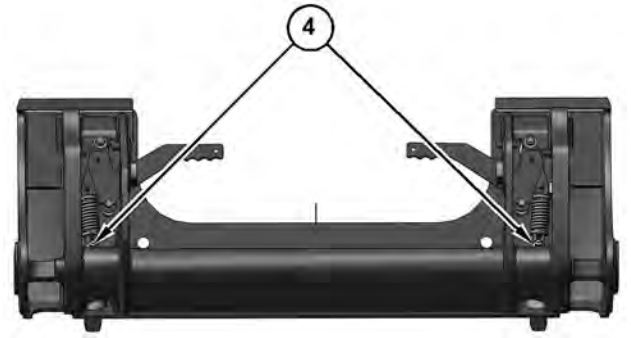

Illustration 497 g06322300

Note: Lubricate the fittings with the loader lift arms in the fully lowered position.

Apply lubricant to the grease fittings (1) for the upper bearings for the tilt cylinders.

Apply lubricant to the grease fittings (2) for the lower bearings for the tilt cylinders.

Apply lubricant to the grease fittings (3) for the pivot pins of the quick coupler assembly.

Apply lubricant to the grease fittings (4) for the coupler engagement pins.

There are a total of 8 grease fittings.

i04439604

Tire Inflation - Check

SMCS Code: 4203-535-AI

Table 60

Tire size and recommended inflation pressure (cold) for Cat Skid Steer Loader D-Series Models					
	Size	Ply Rating	Pressure		
Cat Premium Conventional	12x16.5	10	310 kPa	45 psi	3.10 bar
	14x17.5	14	414 kPa	60 psi	4.14 bar
Cat Low Side Wall	305-546	10	310 kPa	45 psi	3.10 bar
Cat Extreme Duty	12x16.5	14	345 kPa	50 psi	3.45 bar
	14x17.5	14	414 kPa	60 psi	4.14 bar
Cat Premium Conventional Floatation	33x15.5x16.5	12	240 kPa	35 psi	2.41 bar
Galaxy Beefy Baby	12x16.5	10	310 kPa	45 psi	3.10 bar

The above recommended tire inflation pressure is based on a standard machine with the following conditions:

- 75 kg operator
- Typical operating conditions
- Full fluid levels
- The machine weight and the weight of the work tool must not exceed the weight limit on the “ROPS” certification.

Note: Consult your Cat dealer if your machine is experiencing excessive tire slippage. Slippage may be the result of tire wear.

Inflate the tires, if necessary.

Tire Inflation with Air

WARNING

Use a self-attaching inflation chuck and stand behind the tread when inflating a tire.

Proper inflation equipment, and training in using the equipment, are necessary to avoid overinflation. A tire blowout or rim failure can result from improper or misused equipment.

Before inflating tire, install on the machine or put tire in restraining device.

NOTICE

Set the tire inflation equipment regulator at no more than 140 kPa (20 psi) over the recommended tire pressure.

i07430787

Track (Rubber) - Inspect/ Adjust
(MTL Only)

SMCS Code: 4197; 4198-040; 4198-025

Periodic adjustment of the track tension is necessary to avoid damage to the tracks. Maintaining the tracks at the proper tension will maximize the service life of the undercarriage components. The undercarriage components include the sleeves of the drive sprocket, the rings of the drive sprocket, the wheels, and the track.

NOTICE
Do not overtighten the tracks. Tracks that are too tight can cause premature failure of the tracks. Tracks that are too tight can cause power loss and bearing failures.

Tracks that are too loose increase the possibility of the track derailing or the drive lugs mis-feeding on the drive sprocket. In aggressive operating conditions, occasional mis-feeding is normal. If consistent mis-feeding is observed, ensure that the track tension is set to the recommended specification. If the track tension is set to the recommended specification and mis-feeding is still observed, then your application may require a tighter track tension. Increase the track tension until consistent mis-feeding is no longer observed.

The intervals for track tension vary depending on the following conditions: the machine application, the operator, the soil conditions, the climate and the condition of the undercarriage components. Operators are responsible for basic visual inspections of the track tension on a daily basis.

Inspect

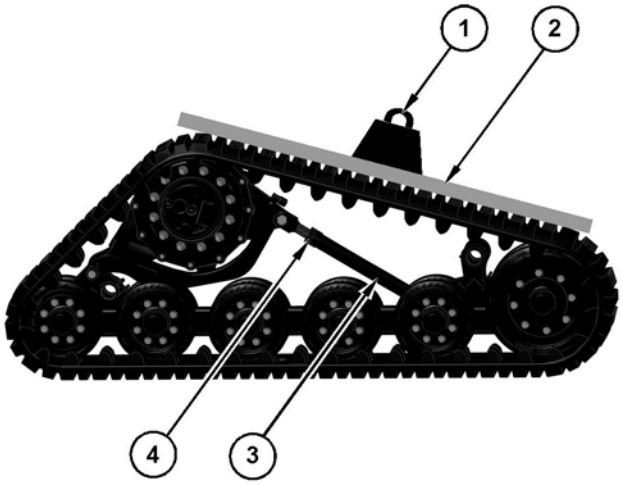

Illustration 498 g06320864

(1) Weight
(2) Straight edge
(3) Adjuster
(4) Jam nut

Place a straight edge (2) across the drive sprocket and idlers. Place approximately 45 kg (100 lb) (1) between the drive sprocket and the front idler wheel. Measure the track sag between the bottom of the straight edge and the top of the track. **The track sag should be set at 12 mm (0.5 inch).** If the track needs adjustment proceed with the following steps.

Track Adjustment

1. Loosen the jam nut (4). A 48 mm (1.875 inch) wrench is recommended.
2. Turn the adjuster (3) to raise or lower the drive sprocket. A 44 mm (1.75 inch) wrench is recommended.
3. Tighten the jam nut to the following torque 270 ± 40 N·m (199 ± 30 lb ft).
4. Recheck the track tension.

Detension the track

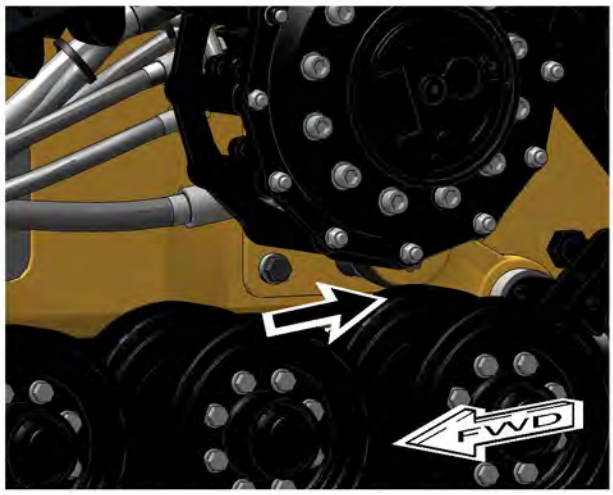

Illustration 499 g06320895

Clean the area under the sprocket.

Note: Many operations for maintenance of the undercarriage require the track to be loosened.

1. Remove any debris from the area under the sprocket before you loosen the track. Trapped material in this area may prevent the drive sprocket from lowering fully.
2. Loosen the jam nut (4). A 48 mm (1.875 inch) wrench is recommended.
3. Turn the adjuster (3) to lower the drive sprocket. A 44 mm (1.75 inch) wrench is recommended.

4. Lower the drive sprocket completely to provide the necessary clearance for maintenance or for removal of the track.

i07430867

Track (Rubber) - Remove/ Replace
(MTL Only)

SMCS Code: 4197; 4198-011; 4198-510

Removing the Track

Note: The track may weigh as much as approximately 136 kg (300 lb) clean depending on model and track style.

1. Position the machine on firm, level ground.
2. Remove any work tool that is attached to the quick coupler.
3. Raise the loader arms and install the brace for the loader lift arm. Refer to Operation and Maintenance Manual, “Loader Lift Arm Brace Operation”.

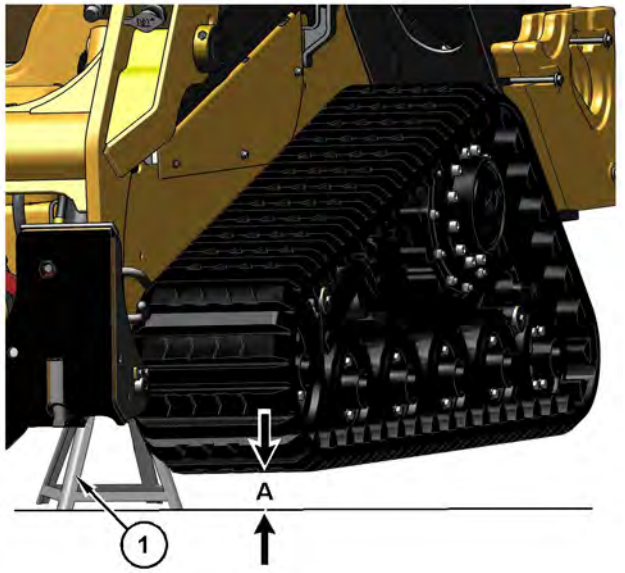

Illustration 500 g06320443

4. Use an appropriate floor jack to lift the machine off the ground. Use appropriate jack stands (1) to block up the machine. Raise the machine until tracks are approximately 50 mm (2.0 inch) (A) off the ground.
5. Detension the track. Refer to Operation and Maintenance Manual, “Track (Rubber) - Inspect/ Adjust”.

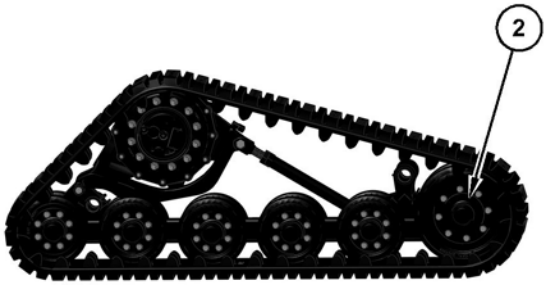

Illustration 501 g06320239

6. Remove the front idler wheel. Refer to Operation and Maintenance Manual, “Bogie and Idler - Inspect/Replace” for the procedure to remove the idler wheels.
7. If necessary, lubricate the remaining front idler wheel and insideof track to ease the removal of the track.
8. Grasp the track on top of the front idler. Pull the track forward and pull the track away from the frame. Slide the drive lugs past the inside front idler wheels.
9. Lift the track off the drive sprocket and pull the track away from the rear idler wheels.

Installing the Track

Note: The track may weigh as much as approximately 136 kg (300 lb) clean depending on model and track style.

1. Slide the track onto the drive sprocket.
2. Position the rear of the track so that the drive lugs are aligned between the rear idler wheels.
3. Pull all the slack forward and make sure that the drive lugs are properly meshed with the drive sprocket. This process will provide the maximum amount of slack to aid with installation across the front idler.
4. Lubricate the idler wheels and inside of track to ease the installation of the track.
5. Pull the track over the front idler wheel.

6. Install the front idler wheel. Refer to Operation and Maintenance Manual, “Bogie and Idler - Inspect/ Replace” for the procedure to install the idler wheel.
7. Tension the track. Refer to Operation and Maintenance Manual, “Track (Rubber) - Inspect/ Adjust”.

i08227976

Track (Steel) - Inspect/Adjust (Steel Track)

SMCS Code: 4170-025; 4170-040; 4197

Track Inspect

Inspect the track visually for damage or missing fasteners. Replace any grousers that are damaged and replace any fasteners that are missing. Refer to Operation and Maintenance Manual, Track Bolts - Check for torque specifications.

Track Preparation

Drive the machine forward slowly until a track link rest over the drive sprocket in the position illustrated below. The angle of this track link should be 5 +/- 3 degrees from horizontal.

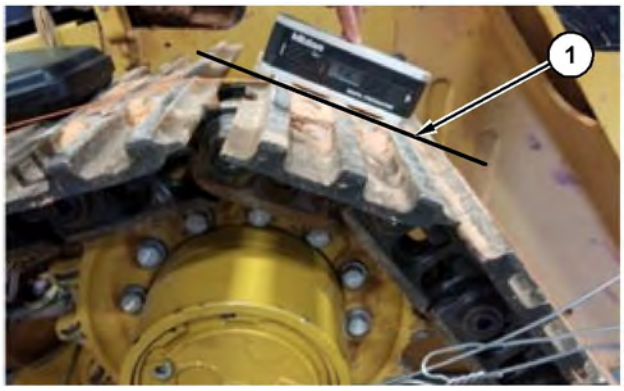

Illustration 502 g06593522

(1) 5 +/- 3 Degrees

Track Measurement

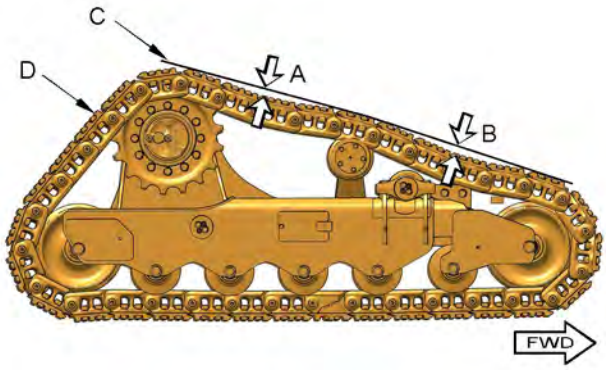

Illustration 503 g06324053

(A) First point of measure
(B) Second point of measure
(C) Reference string
(D) Track Profile

With a long string (C) and two weights, lay the string over the track making sure that the string extends past the rear idler and front idler and does NOT touch the ground. Attach a weight to both ends of the string so the weights pull the string taut. Measure from the two lowest points(A & B) in the track to the string. Average these two measurements. The distance between the string and the track should be between 14 mm (0.55 inch) and 18 mm (0.70 inch).

New tracks should meet this condition and be checked periodically. Check after the first 50 hours and then again at 100 hours. Check every 250 hours after the first two checks.

Track Adjustment

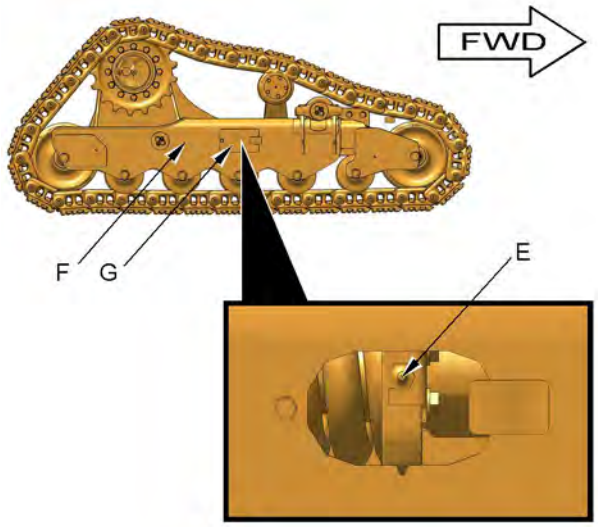

Illustration 504 g06324084

(E) Greaser Valve - Recoil Gp
(F) Right-Hand undercarriage assembly
(G) Cover Plate for Recoil Gp Greaser Valve

To adjust the tension, there is a greaser valve on the recoil group. To relax the tension on the track, loosen the greaser with an appropriate wrench or socket. To tighten the tension on the track, make sure that the greaser is tight. Apply grease to the greaser until the proper tension is achieved.

Note: Turn the greaser a maximum of one full turn when releasing track tension.

Track Bolts - Check

Check the torque for the track grouser bolts, the master link bolts, and the carrier roller alignment bolts. Torque to the required value per the table below.

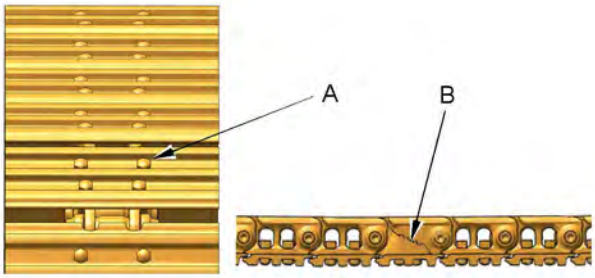

Illustration 505 g06324085

(A) Track Grouser bolts
(B) Master Link bolts

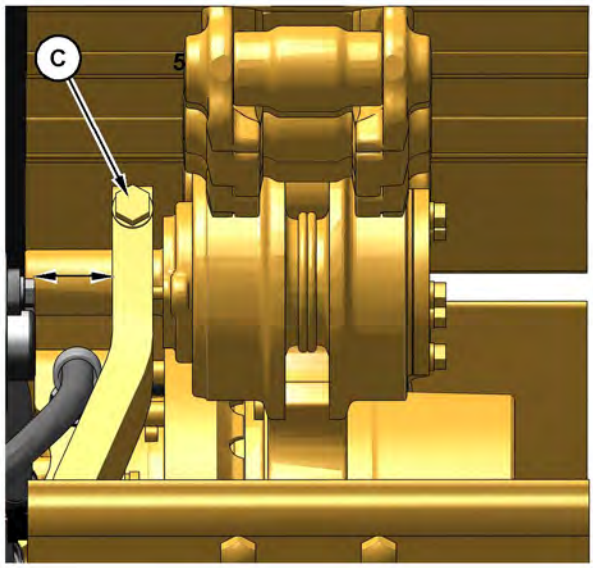

Illustration 506 g06593539

(C) Carrier Roller Alignment Bolt

Table 61

Bolt Location	Initial Torque	Additional Torque Turn
(A) Track Grouser	90 ± 20 N·m (66.3 ± 14.8 lb ft)	120 Degrees

(continued)

(Table 61, contd)

(B) Master Link	90 ± 20 N·m (66.3 ± 14.8 lb ft)	180 Degrees
(C) Carrier Roller Alignment	180 ± 10 N·m (132.8 ± 7.4 lb ft)	0 Degrees

i07378301

Track - Inspect/Adjust
(CTL Only)

SMCS Code: 4170-040; 4170-025

Periodic adjustment of the track tension is necessary to avoid damage to the tracks. Maintaining the tracks at the proper tension will maximize the service life of the undercarriage components. The undercarriage components include the final drive sprocket, idlers, rollers, and the track.

NOTICE
Do not overtighten the tracks. Tracks that are too tight can cause premature failure of the tracks. Tracks that are too tight can cause power loss and bearing failures.

Tracks that are too loose increase the possibility of the track derailing or the drive lugs mis-feeding on the drive sprocket. In aggressive operating conditions, occasional mis-feeding is normal. If consistent mis-feeding is observed, ensure that the track tension is set to the recommended specification. If the track tension is set to the recommended specification and mis-feeding is still observed, then your application may require a tighter track tension. Increase the track tension until consistent mis-feeding is no longer observed.

The intervals for track tension vary depending on the following conditions: the machine application, the operator, the soil conditions, the climate and the condition of the undercarriage components. Operators are responsible for basic visual inspections of the track tension on a daily basis.

Inspect

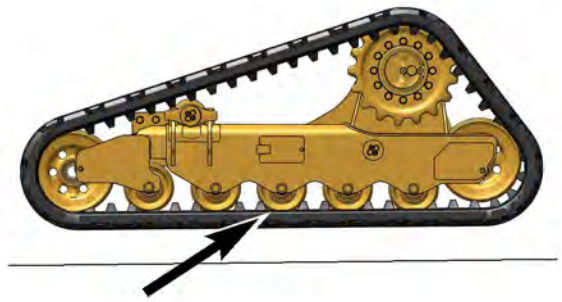

Illustration 507 g06319580

Support the machine so that the track is a minimum of 51 mm (2 inch) above the ground.

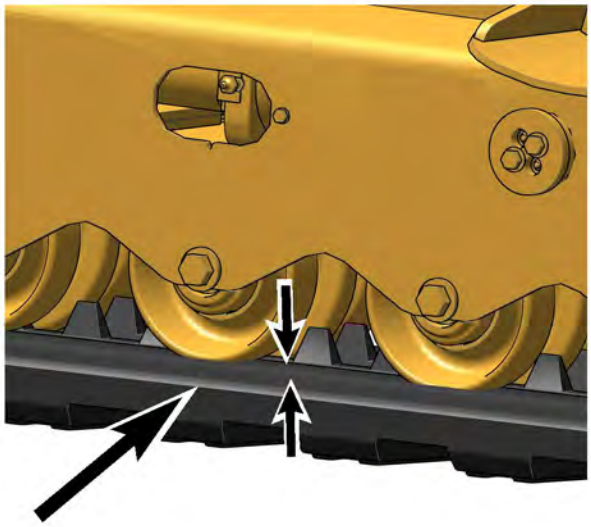

Illustration 508 g06319589

Measure the track sag at the middle track roller. Measure the distance from the bottom surface of the flange on the roller to the inside top surface of the track. Refer to the table for the proper specifications for your model.

Table 62

Track Sag Specifications				
	239D3 and 249D3	259D3	279D3 and 289D3	299D3 and 299D3 XE
Minimum Sag	15 mm (0.59 inch)	15 mm (0.59 inch)	25 mm (0.98 inch)	25 mm (0.98 inch)
Maximum Sag	25 mm (0.98 inch)	25 mm (0.98 inch)	35 mm (1.38 inch)	35 mm (1.38 inch)

Track Adjustment

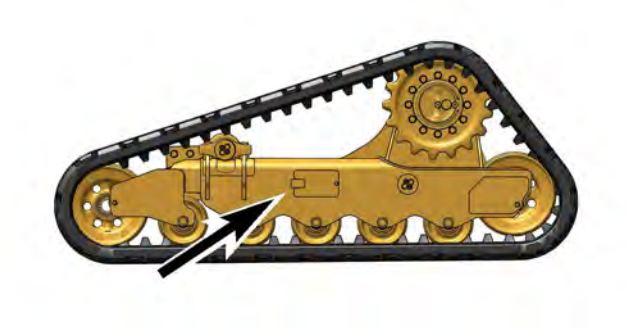

Illustration 509 g06319577

1. To adjust the track, remove the access panel on the side of the undercarriage.

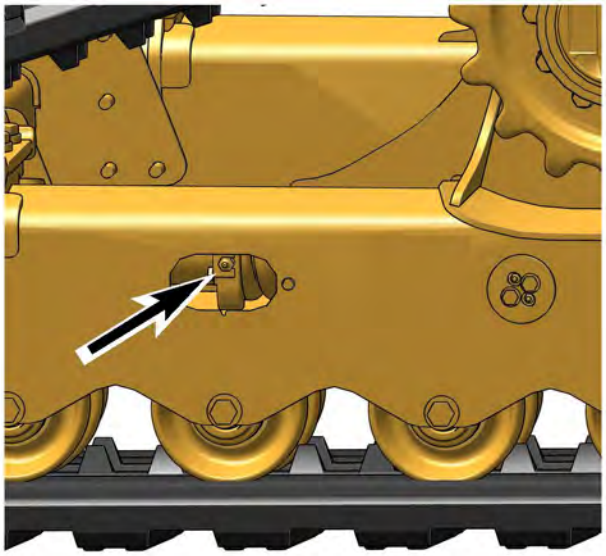

Illustration 510 g06319622

2. Pressurized grease in a cylinder is used to provide tension on the track. Use a grease gun to apply grease to the grease fitting on the cylinder. The track will be tightened.
3. Recheck the track tension.
4. Replace the access panel when the desired sag is achieved.

Detension the track

WARNING

Personal injury or death can result from grease under pressure.

Grease coming out of the relief valve under pressure can penetrate the body causing injury or death.

Do not stand directly in front of the relief valve to see if grease is escaping. Watch the track or track adjustment cylinder to see if the track is being loosened.

If track does not loosen, close the relief valve and consult your Cat dealer.

Note: Many operations for maintenance of the undercarriage require the track to be loosened.

1. To detension the track, remove the access panel on the side of the undercarriage.

2. Loosen the grease fitting with a suitable device. Loosen the grease fitting carefully until the track begins to loosen.

Note: Catch the grease in a suitable container. Dispose of the grease in accordance with all applicable regulations.

Note: One turn should be sufficient. If grease does not flow as expected, the lock plate can be temporarily removed. The relief valve can be turned further to allow for increased flow. Do not turn the relief valve more than eight turns.

3. Tighten the grease fitting to a torque of 74 ± 14 N·m (55 ± 10 lb ft) when the desired track tension is reached.

4. Replace the access panel.

i07426301

Track - Remove/Replace (CTL Only)

SMCS Code: 4170-011; 4170; 4170-510

Removing the Track

1. Position the machine on firm, level ground.

2. Remove any work tool that is attached to the quick coupler.

3. Raise the loader arms and install the brace for the loader lift arm. Refer to Operation and Maintenance Manual, “Loader Lift Arm Brace Operation”.

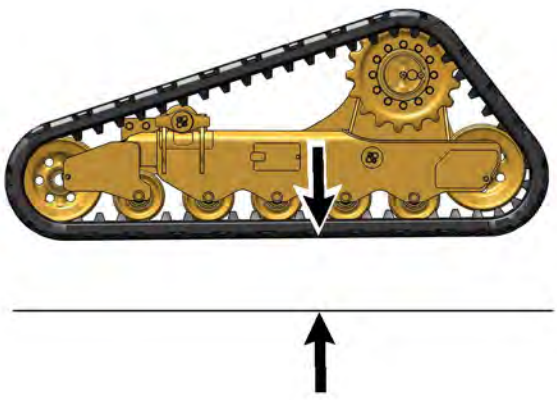

Illustration 511 g06319494

4. Use an appropriate floor jack to lift the machine off the ground. Use appropriate jack stands to block up the machine. Raise the machine until tracks are approximately 50 mm (2.0 inch) (A) off the ground.

5. Detension the track. Refer to Operation and Maintenance Manual, “Track - Inspect/Adjust”.

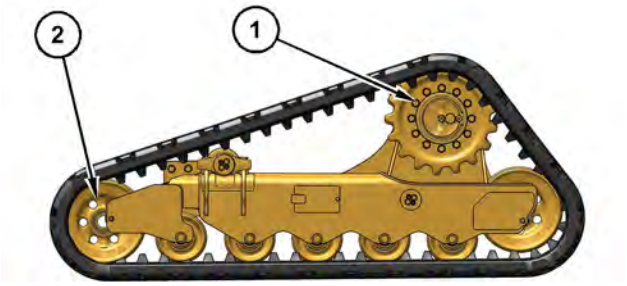

Illustration 512 g06319531

(1) Final Drive Sprocket
(2) Front idler wheel

Note: The track may weigh as much as approximately 262 kg (578 lb) clean depending on model and track style.

6. Use a suitable lifting device. Lift the track at MIDDLE position between the front idler and the final drive sprocket until the front idler collapses fully.

Note: Support the bottom of the track to maximize the slack between the front idler and the drive sprocket.

7. Keep the track supported with a hoist. Lift the track over the flange of the front idler so that the inner track guides clear flanges.
8. Lift the track over the sprocket with a suitable lifting device. The inner guides need to clear the sprocket teeth.
9. Lift the track over the rear idler. The inner track guides need to clear the rear idler.

Installing the Track

Note: The track may weigh as much as approximately 262 kg (578 lb) clean depending on model and track style.

1. Use a suitable lifting device. Slide the track onto the rear idler so that the inner track guides straddle the rear idler. If your machine is equipped with an idler with dual flanges, the inner track guides must seat between the flanges.
2. Pull the track forward to ensure that the track guides are fully seated on the rear idler.
3. Lift the track over the final drive sprocket so that the inner track guides straddle the sprocket teeth. The sprocket teeth should seat in the openings in the middle of the track.
4. Pull all the slack forward. This action will provide the maximum amount of slack to aid with installation across the front idlers.

Note: Support the bottom of the track to maximize the slack. This support will help with installation.

5. Position the track so that the inner track guides seat between the flanges on the front idler.
6. Tension the track. Refer to Operation and Maintenance Manual, “Track - Inspect/Adjust” for the procedure.

i08227470

Track - Remove/Replace
(Steel Track)

SMCS Code: 4170-011; 4170; 4170-510

Removing the Track

1. Position the machine on firm, level ground.
2. Remove any work tool that is attached to the quick coupler.
3. Raise the loader arms and install the brace for the loader lift arm. Refer to Operation and Maintenance Manual, “Loader Lift Arm Brace Operation”.

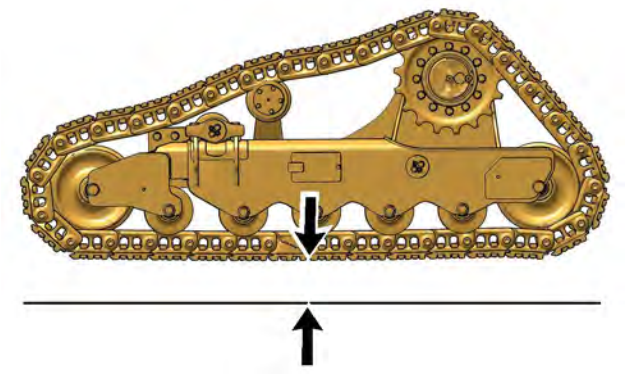

Illustration 513 g06323612

4. Use an appropriate floor jack to lift the machine off the ground. Use appropriate jack stands to block up the machine. Raise the machine until tracks are approximately 50 mm (2.0 inch) (A) off the ground.
5. Detension the track. Refer to Operation and Maintenance Manual, “Track (Steel) - Inspect/Adjust”.

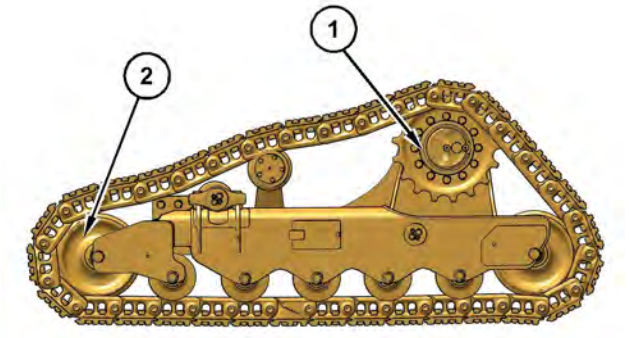

Illustration 514 g06323616

(1) Final Drive Sprocket
(2) Front idler wheel

Note: The approximate weight of the track is 430 kg (948 lb).

6. Use a suitable method to flag the track shoe over the master link so that the track location can be seen from the operator station.

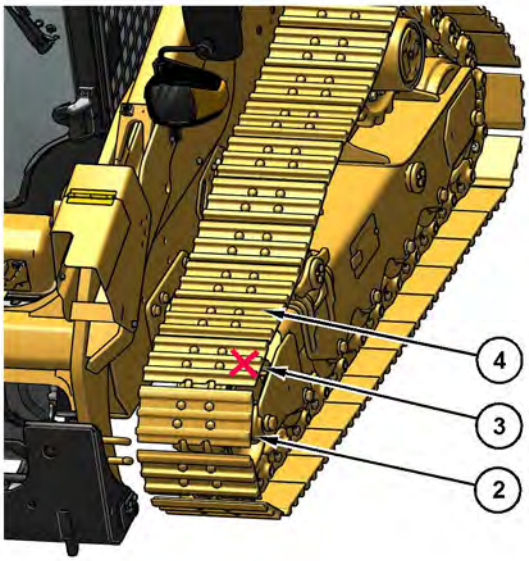

Illustration 515 g06323643

(2) Front Idler Wheel
(3) Flagged Track over Master Link
(4) Lifting Device Location

7. Operate the machine drive control to position the flagged track shoe at the top of the front idler & shut off the machine.

8. Use a suitable lifting device. Strap the track just behind the flagged track shoe by routing a lifting sling through the debris openings of the track shoe next to the flagged track shoe per

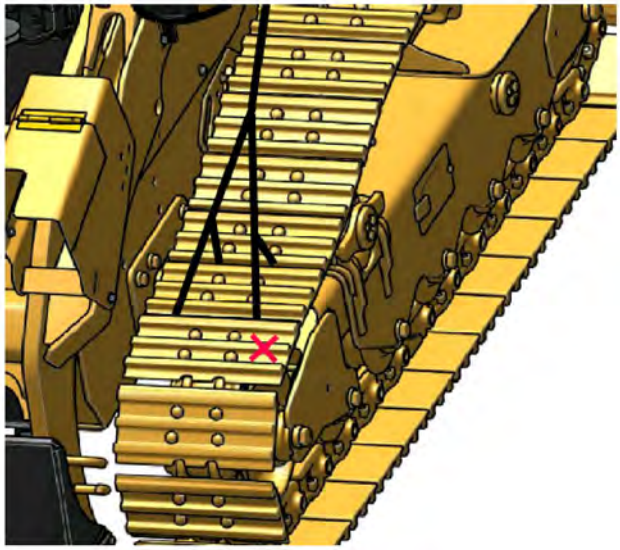

Illustration 516 g06324287

Route strap through debris openings.

9. Use suitable blocking material in front of the front idler to catch the forward portion of the track

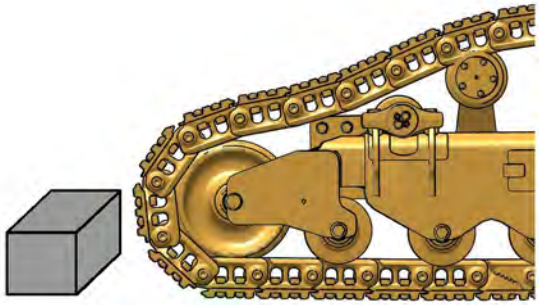

Illustration 517 g06324426

10. Remove the four master link bolts of the flagged track shoe over the master link and remove the track shoe.

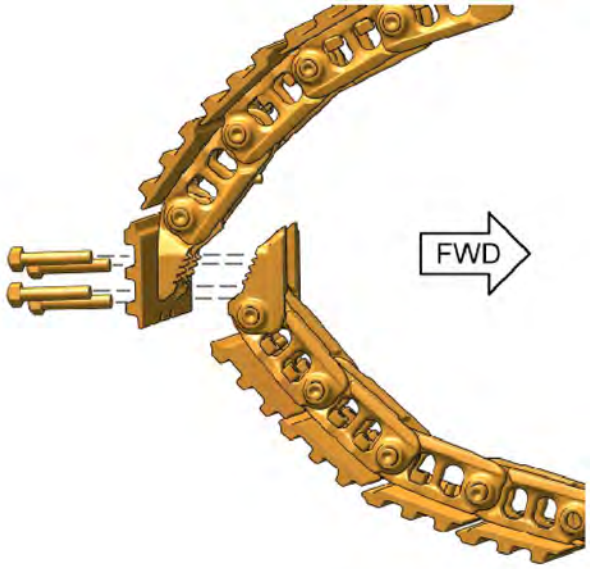

Illustration 518 g06324157

11. Lift the strapped rear portion of the track and over the sprocket and lay this portion on the ground behind the machine.

12. Repeat steps 6 through 11 for the other side.

Installing the Track

Note: The approximate weight of the track is 400 kg (882 lb).

1. Unroll out the track assembly on a flat, level surface. Ensure that the two master links are free of any paint and primer. Orient the track assembly so the leading edge of the track shoes face forward when on the top of the undercarriage.

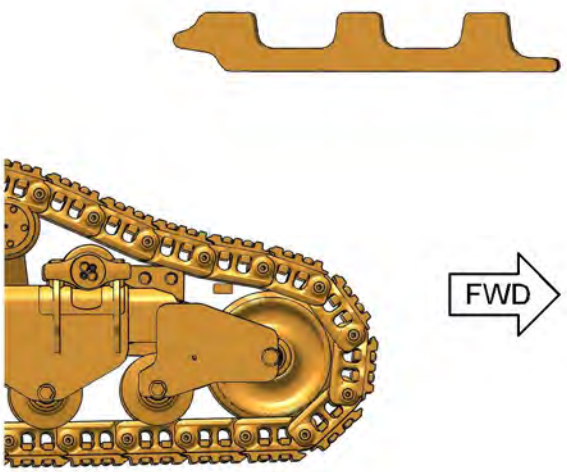

Illustration 519 g06323836

2. Use suitable lifting or moving equipment to lay out the track under the undercarriage. Ensure that placement of the track allows enough length behind the machine to wrap over the sprocket.
3. Use an appropriate lifting device. Strap the track by routing a lifting sling through the debris openings of the rear most track shoe
4. Lift the rear portion of the track over the sprocket, engaging enough teeth to retain the weight of the track.
5. Lift the front portion of the track over the carrier roller. Use suitable blocking material at the front idler to prevent the track from slipping off the undercarriage.
6. Connect the two master links insuring all the teeth align. Secure the two links together with four master link bolts. See Operation and Maintenance Manual, Track Bolts - Check for the proper torque value.
7. Check and adjust the alignment of the carrier roller with respect to the center of the link assembly. Loosen the carrier roller alignment bolt and shift the roller assembly as needed. See Operation and Maintenance Manual, Track Bolts - Check for the proper torque value.

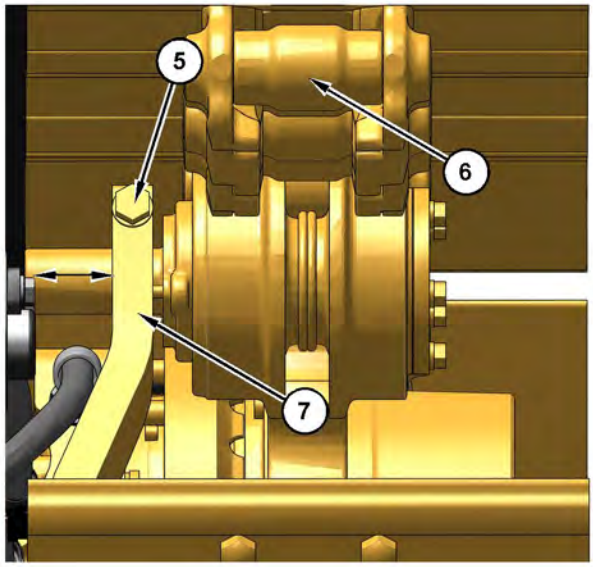

Illustration 520 g06323842

(5) Carrier Roller Alignment bolt
(6) Center of Link Assembly
(7) Roller Assembly

8. Remove blocking and strapping.

i07719241

Track Pins - Inspect
(Steel Track)

SMCS Code: 4175-040; 4175-040-PN; 4175; 7521

WARNING

Fingers can be burned from hot pins and bushings.

The pins and bushings in a dry joint can become very hot. It is possible to burn the fingers if there is more than brief contact with these components.

Use the recommendations to extend the life of the undercarriage. Use the recommendations to avoid excessive downtime.

1. During the machine operation, listen for unusual squeaking and for unusual squealing. This noise can indicate a dry joint.
2. Check the machine for dry joints weekly. Check for dry joints immediately after machine operation. After machine operation, lightly touch the end of each track pin or bushing. Touch the track pin or the track bushing with the back of your hand. Make a mark on any dry track pin joint that is hot to the touch.

Consult the Custom Track Service expert at any Cat dealer if you detect dry joints or leaks. The Custom Track Service expert at the Cat dealer can perform track inspection.

i07719244

Track Roller and Idler - Inspect/Replace
(CTL - Steel Track)

SMCS Code: 4159-040; 4159-510; 4180-040; 4180-510

Inspect

Clean the undercarriage before inspecting the idlers and the rollers.

Inspect the idlers and the rollers for damage and wear.

The idlers and the rollers should be replaced when the damage to the wheels adversely affects machine performance.

Note: The idlers and the rollers contain oil. The idlers and the rollers are sealed for life. Periodically, inspect the idlers and the rollers for leaks or for excessive end play. Contact your Caterpillar dealer if either leaks or excessive end play is found.

i07719246

Wheel Nuts - Tighten
(SSL Only)

SMCS Code: 4210-527

When wheels are installed, check the torque after every one service hour until the specified torque is maintained. After the specified torque is maintained, check the torque on the nuts after every ten service hours or every day.

Check the nuts on all four wheels. Use a star pattern when you are tightening the nuts.

The torque specifications are given in the following table.

Table 63

Tightening Torque for Wheels	
Solid Tires	163 ± 7 N·m (120 ± 5 lb ft)
Pneumatic Tires	149 ± 7 N·m (110 ± 5 lb ft)

i07425984

Window Washer Reservoir - Fill
(If Equipped)

SMCS Code: 7306-544-KE

NOTICE
When operating in freezing temperatures, use Caterpillar nonfreezing window washer solvent or equivalent. System damage can result from freezing.

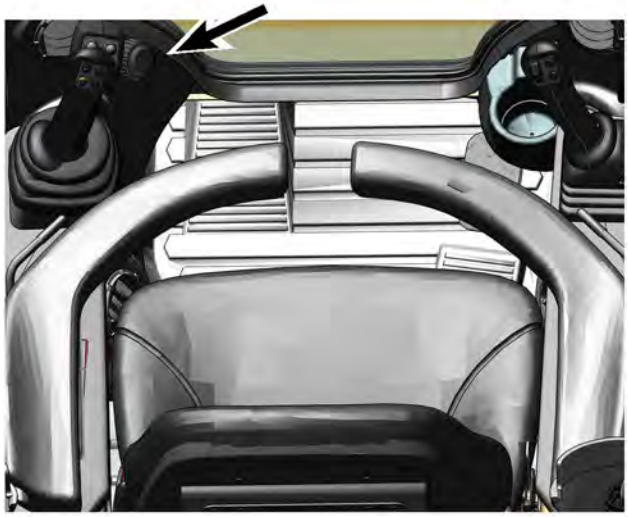

Illustration 521 g06319415

The reservoir for the window washer solvent is located inside the cab by the left footrest.

Fill the reservoir with window washer solvent. Window washer solvent with isopropyl alcohol is recommended.

i02810705

Window Wiper - Inspect/ Replace
(If Equipped)

SMCS Code: 7305-040; 7305-510

Inspect the condition of the front window wiper blade. Replace the window wiper blade if the window wiper blade is worn or damaged. If the window wiper blade streaks the window, replace the window wiper blade.

i07424502

Windows - Clean

SMCS Code: 7310-070

Rear Window and Glass Front Door

Use commercially available window cleaning solutions to clean the windows.

Apply the cleaning solution liberally. Wipe the surface.

Dry the surface to prevent spots.

Side Windows

Use commercially available window cleaning solutions to clean the windows.

The upper sliding side windows of the cab can be removed for cleaning. Refer to the following procedure to remove the side windows.

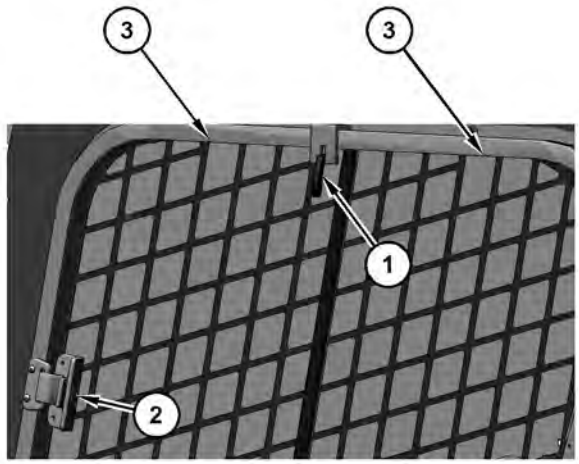

Illustration 522 g06319220

1. Release the lock(1) and the latch(2). Slide the front window rearward between the circular marks (3) in the top of the window frame. Push the window upward in the track. Pull outward on the bottom of the window to remove the window.
2. Release the lock(1) and the latch(2). Slide the rear window forward between the circular marks (3) in the top of the window frame. Push the window upward in the track. Pull outward on the bottom of the window to remove the window.
3. Reverse the process to install the windows. Install the rear window in the outer track. Install the front window in the inner track next.

Polycarbonate Front Door and Polycarbonate Top Window

Note: Do not wipe the window dry. Do not use paper towels. This may scratch the finish of the polycarbonate windows over time.

For cleaning your polycarbonate top window or polycarbonate front door, use a soft cloth, a sponge, or a chamois. Use any of the following cleaners:

- soap and water
- isopropyl alcohol
- kerosene
- denatured alcohol
- commercially available window cleaning solutions

Apply the cleaning solution liberally. Wipe the surface.

i07690427

Work Tool - Lubricate

SMCS Code: 6700-086

Multipurpose Bucket

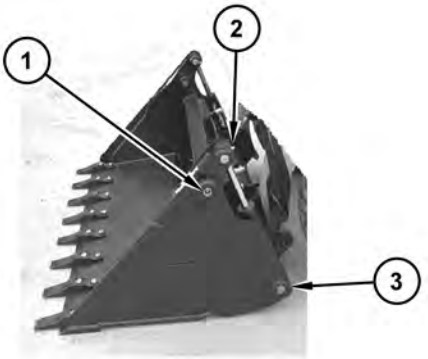

Illustration 523 g01280216

Apply lubricant to the grease fitting (1) for the pivot pin of the apron.

Apply lubricant to the grease fitting (2) for the rod end of the multipurpose bucket cylinder.

Apply lubricant to the grease fitting (3) for the head end of the multipurpose bucket cylinder.

Repeat for the other side of the bucket.

There are six grease fittings.

Utility Grapple Bucket and Utility Grapple Fork

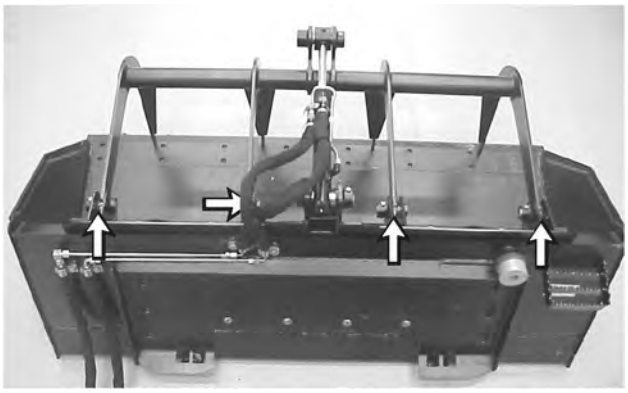

Illustration 524 g00647980

Apply lubricant to the four grease fittings for the grapples.

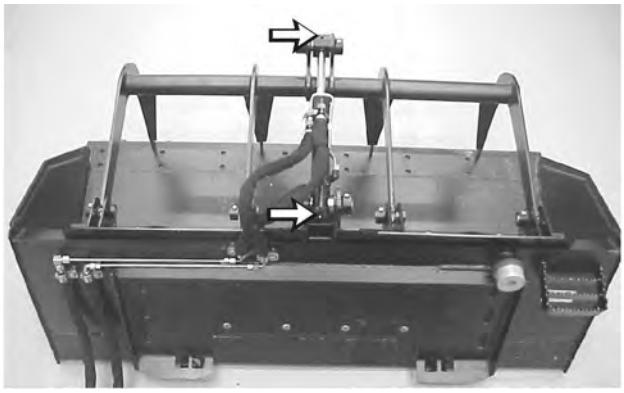

Illustration 525 g00647988

Apply lubricant to the two fittings for the grapple cylinder.

There are six grease fittings.

Industrial Grapple Bucket and Industrial Grapple Fork

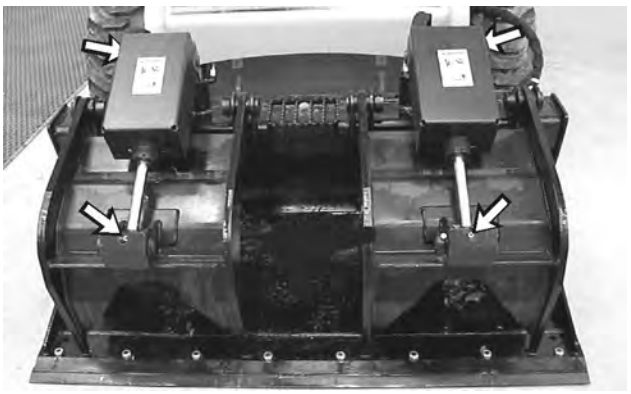

Illustration 526 g00645995

Apply lubricant to the four grease fittings for the fork cylinders.

Illustration 527 g00646004

Apply lubricant to the four grease fittings for the two forks.

There are eight grease fittings.

Grapple Rake

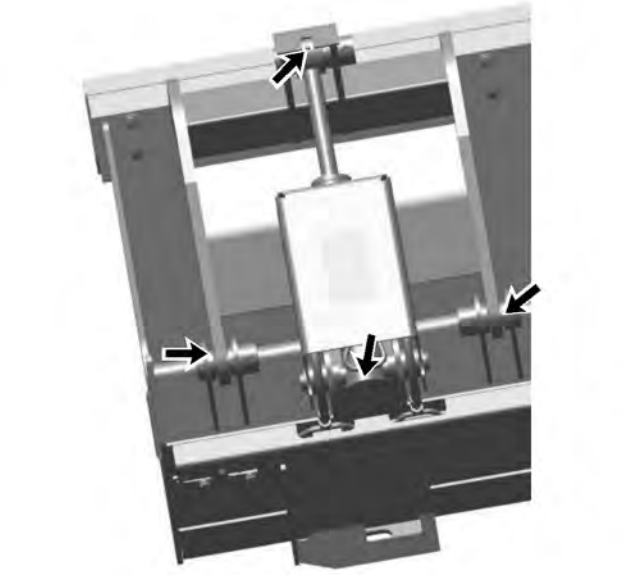

Illustration 528 g06393809

Apply lubricant to the four grease fittings for the grapple cylinders.

Apply lubricant to the four grease fittings for the two grapples.

There are eight grease fittings.

Angle Blade

Illustration 529 g00648033

Apply lubricant to the grease fitting on the rod end of the angle cylinder.

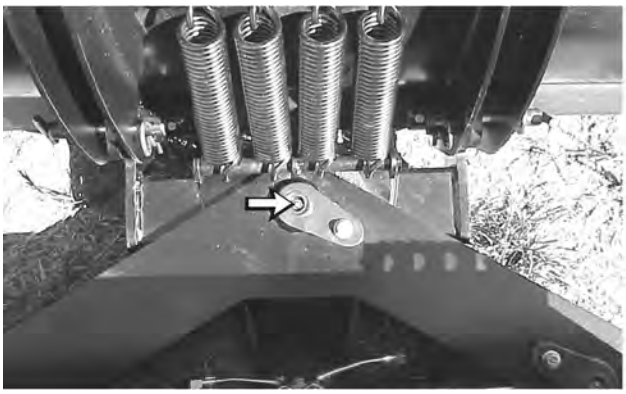

Illustration 530 g00648037

Apply lubricant to the grease fitting on the horizontal pivot point of the blade.

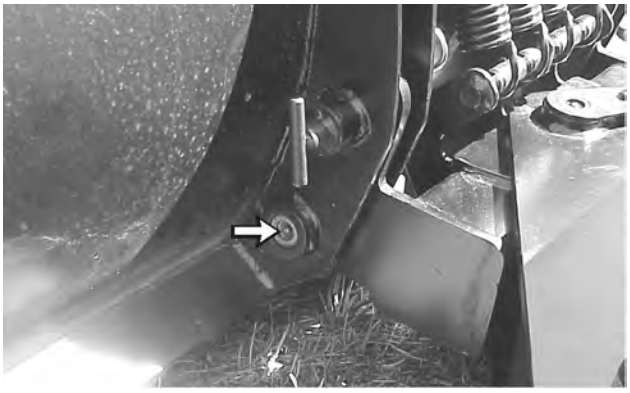

Illustration 531 g00648038

Apply lubricant to the grease fitting on the vertical pivot point of the blade. Repeat for opposite side of the blade.

Illustration 532 g06393796

This is a bottom view of the angle blade.

Apply lubricant to the grease fitting on the pivot point of the cylinder.

There are five grease fittings.

Dozer Blade

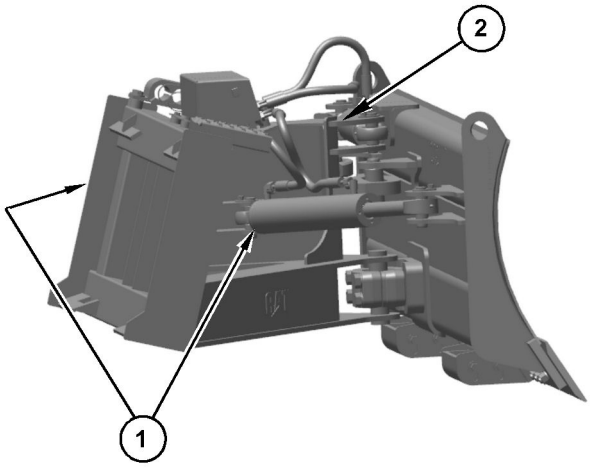

Illustration 533 g06394928

Apply lubricant to the grease fitting on both ends of the right hand angle cylinder (1). Repeat for opposite side of the blade.

Apply lubricant to the grease fitting on the pivot points on each end of the tilt cylinder (2).

There are six grease fittings.

i03881935

Work Tool Guard and Reflector - Inspect/Replace

SMCS Code: 6700

Ensure that all safety reflectors are clean. Ensure that all safety reflectors are not damaged. When you clean the safety reflectors, use a cloth, water and soap. Do not use solvent, gasoline, or other harsh chemicals to clean the safety reflectors. Solvents, gasoline, or harsh chemicals could loosen the adhesive that secures the safety reflectors. Loose adhesive will allow the safety reflectors to fall.

Replace any safety reflector or replace any guards that are damaged, or missing. If a safety reflector is attached to a part that is replaced, install a safety reflector on the replacement part. Any Caterpillar dealer can provide new safety reflectors.

i01809997

Work Tool Mounting Bracket - Inspect

SMCS Code: 6700-040-BK

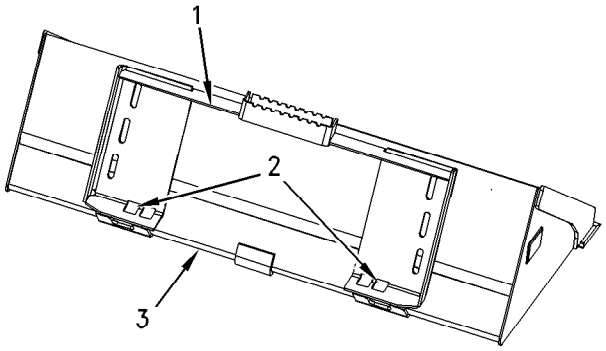

Illustration 534 g00925058

Inspect upper angled plate (1) and ensure that the plate is not bent or otherwise damaged. Inspect holes (2) for wear and for damage. Inspect lower angled plate (3) and ensure that the plate is not bent or otherwise damaged. If any wear is suspected or any damage is suspected, consult your Caterpillar dealer before you use the work tool.

Warranty Section

Warranty Information

i06112217

Emissions Warranty Information

SMCS Code: 1000

The certifying engine manufacturer warrants to the ultimate purchaser and each subsequent purchaser that:

1. New non-road diesel engines and stationary diesel engines less than 10 liters per cylinder (including Tier 1 and Tier 2 marine engines < 37 kW, but excluding locomotive and other marine engines) operated and serviced in the United States and Canada, including all parts of their emission control systems (“emission related components”), are:

a. Designed, built, and equipped so as to conform, at the time of sale, with applicable emission standards prescribed by the United States Environmental Protection Agency (EPA) by way of regulation.

b. Free from defects in materials and workmanship in emission-related components that can cause the engine to fail to conform to applicable emission standards for the warranty period.

2. New non-road diesel engines (including Tier 1 and Tier 2 marine propulsion engines < 37 kW and Tier 1 through Tier 4 marine auxiliary engines < 37 kW, but excluding locomotive and other marine engines) operated and serviced in the state of California, including all parts of their emission control systems (“emission related components”), are:

a. Designed, built, and equipped so as to conform, at the time of sale, to all applicable regulations adopted by the California Air Resources Board (ARB).

b. Free from defects in materials and workmanship which cause the failure of an emission-related component to be identical in all material respects to the component as described in the engine manufacturer's application for certification for the warranty period.

3. New non-road diesel engines installed in construction machines conforming to the South Korean regulations for construction machines manufactured after January 1, 2015, and operated and serviced in South Korea, including all parts of their emission control systems (“emission related components”), are:

a. Designed, built, and equipped so as to conform, at the time of sale, with applicable emission standards prescribed in the Enforcement Rule of the Clean Air Conservation Act promulgated by South Korea MOE.

b. Free from defects in materials and workmanship in emission-related components that can cause the engine to fail to conform to applicable emission standards for the warranty period.

A detailed explanation of the Emission Control Warranty that is applicable to new non-road and stationary diesel engines, including the components covered and the warranty period, is found in a supplemental Special Publication. Consult your authorized Cat dealer to determine if your engine is subject to an Emission Control Warranty and to obtain a copy of the applicable Special Publication.

Reference Information Section

Reference Materials

i06746033

Reference Material

SMCS Code: 1000; 7000

Additional literature regarding your product maybe purchased from your local Cat dealer or by visiting www.cat.com. Use the product name, sales model, and serial number to obtain the correct information for your product.

Regulatory Information (Japan)

Vehicle Inspection

Vehicle inspection certification is required to operate a machine on public roads. This includes driving on as well as crossing public roads. For details, consult your Cat dealer.

Qualifications for Machine Operation

The following qualifications are required for the operation of this machine:

Excavation and Loading

Completion of the construction machines (for land leveling, hauling, loading, and excavation) operation skill training course. (Qualification by the Industrial Safety and Health Act)

Demolition

Completion of the construction machines (for demolition) operation skill training course. (Qualification by the Industrial Safety and Health Act)

Mining Jobs

Certification by the Director General or Deputy Director General of Bureau of Mine Safety after completion of the safety training course. (Qualification by the Mine Safety Act)

Crane Slinging for the Bucket with a Hook

Completion of the special slinging training for the crane for loads weighing less than 1 ton. (Qualification by the Industrial Safety and Health Act)

Trailer Transportation

In principle, this machine should be transported by a trailer. Select the appropriate trailer regarding the machine weight and measurements shown in the major specifications in the specification part of this manual. Be aware machine weight and transportation measurements differ depending on the various types of attachments.

- In the event heavy items are to be transported, observe the related laws such as Road Traffic Law, Road Laws, Road Transportation Vehicle Laws, and Vehicle Restriction Laws.
- Conduct prior investigation of the road width, ground clearance of road/railway bridges, weight restrictions and so on, of the planned transportation route, to confirm the viability of the transportation execution.

Load

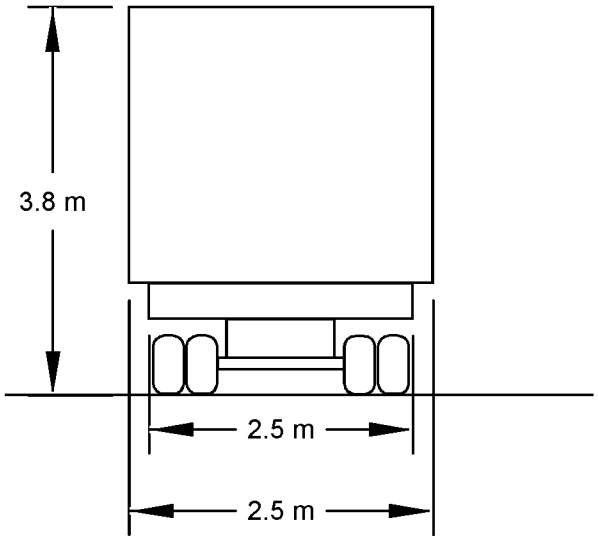

Illustration 535 g02698738

- Not more than 3.8 m (12 ft 6 inch)
- Not more than 2.5 m (8 ft 2 inch)(Safety Standard)
- Not more than 2.5 m (8 ft 2 inch) (Vehicle Restriction Laws)
- Items that protrude out are not allowed. (Government ordinance for Road Traffic Laws)

Transportation weight and measurements are restricted by the Vehicle Restriction Laws. If the actual weight/measurements exceed the limitation figures, you must submit the restriction relaxation request to the pertinent governmental agencies. For details, consult your Cat dealer.

Table 64

Total Length	Not more than 12 m (39 ft 4 inch)
Total Width (A)	Not more than 2.5 m (8 ft 2 inch)
Total Height (B)	Not more than 3.8 m (12 ft 6 inch) when loaded on the trailer.
Total Weight	20 to 25 ton (depending on road, axle, and vehicle length)

Note: If the size or weight exceeds what is listed, an accommodation application is required. Contact your Cat dealer for more information.

Qualification of Operators

Operation of construction equipment is limited to operators who have any of the following licenses by law.

Note: Employers will face imprisonment up to a maximum of 6 months or a fine of up to a maximum of five hundred thousand yen if they let unqualified personnel operate equipment. Unqualified operators will also be fined up to a maximum of five hundred thousand yen.

- One who completed an operating skill course for vehicle-type construction equipment at a registered training institution.
- One who passed the construction equipment and technologies license examination (Type 1-3) defined by the Construction Industry Law.
- One who completed an operating training course for construction equipment defined by the Vocational Training Law.
- One who took a special training (rules and skills) at a registered training institution to operate equipment weighing less than 3 tons.
- With an auto-drivers license which is conformed to each model, an operator does not need to complete an operating skill course for construction equipment to operate equipment on the roads that apply to the rules of the Road Traffic Act. However, the operator needs to complete the course to engage in snow clearing or excavating on the roads.
- Operator needs to be qualified under the Mine Safety Act to operate construction equipment in a mine.

Acquisition of the Qualifications

The company offers training courses for construction machine operation, in addition to other skills. For details, contact the company's dealer in your area.

Regarding machine operation qualifications, also refer to the laws related to the construction machines shown at the end of this manual.

Operation of Construction Equipment and the Governing Laws and Regulations

NOTICE

Information of operating skill course for vehicle-type construction equipment (for ground leveling, transporting, loading, excavating)

Industrial Safety and Health Act requires operators of construction equipment weight 3 tons and over to acquire a certificate of completion of an operating skill course. Registered with and authorized by the respective directors general of the regional labor bureaus, we offer operating skill courses for vehicle-type construction equipment and special trainings.

Caterpillar Operating Training Center

Head Office:

Address: 3700 Tana, Sagamihara-City, Kanagawa
Tel: (042) 763-7130
Fax: (042) 761-5540
Website: http://cot.catjs.com
e-mail: cot-honsha@cat.com

Training centers registered with the respective directors general of the regional labor bureaus and special training sites:

Locations

- Shizuoka Operating Training Center (Fujieda-City) (Registered with Director General of Shizuoka Regional Labor Bureau) Tel: (054) 641-7010
- Tokai Operating Training Center (Toyohashi-City) (Registered with Director General of Aichi Regional Labor Bureau) Tel: (053) 265-5151
- Chugoku Operating Training Center Okayama Operating Training Center (Okayama-City) (Registered with Director General of Okayama Regional Labor Bureau) Tel: (086) 272-0001

- Chugoku Operating Training Center Hiroshima Operating Training Center (Hiroshimma-City) (Registered with Director General of Hiroshima Regional Labor Bureau) Tel: (082) 893-3011
- Caterpillar Kyushu Ltd. (Registered with the Director General of the Regional Labor Bureau) Fukuoka Operating Training Center Tel: (092) 924-1455 Nagasaki Operating Training Center Tel: (095) 725-3735 Kumamoto Operating Training Center Tel: (096) 359-0052 Miyazaki Operating Training Center Tel: (098) 530-2075 Oita Operating Training Center Tel: (097) 573-5955
- Hyogo Operating Training Center (Ono-City) (Registered with the Director General of Hyogo Regional Labor Bureau) Tel: (079) 467-2211
- Kinki Operating Training Center Osaka-Minami Operating Training Center (Izumi-City) (Registered with Director General of Osaka Regional Labor Bureau) Tel: (072) 556-6373
- Kinki Operating Training Center Wakayama Operating Training Center (Wakayama-City) (Registered with Director General of Wakayama Regional Labor Bureau) Tel: (073) 455-3377
- Hokuriku Operating Training Center (Kanazawa-City) (Registered with Director General of Ishikawa Regional Labor Bureau) Tel: (076) 258-2302
- Hokuriku Operating Training Center Niigata Operating Training Center (Niigata-City) Tel: (025) 266-6161
- Hokkaido Operating Training Center (Sapporo-City) (Registered with Director General of Hokkaido Regional Labor Bureau) Tel: (011) 795-7022
- Caterpillar Tohoku Ltd. Miyagi Operating Training Center (Iwanuma-City) (Registered with Director General of Migyagi Regional Labor Bureau) Tel: (022) 329-3911
- Saitama Operating Training Center Fukaya Operating Training Center (Fukaya-City) (Registered with Director General of Saitama Regional Labor Bureau) Tel: (048) 572-1177
- Saitama Operating Training Center Chichibu Operating Training Center (Chichibu-City) (Registered with Director General of Saitama Regional Labor Bureau) Tel: (049) 424-7319
- Higashi-Kanto Operating Training Center (Kashiwa-City) (Registered with Director General of Chiba Labor Bureau) Tel: (047) 133-2126
- Sagami Operating Training Center (Sagamihara-City) (Registered with Director General of Kanagawa Regional Labor Bureau) Tel: (042) 763-7103
- Kinki Operating Training Center Ibaraki Operating Training Center (Ibaraki-City) (Registered with Director General of Osaka Regional Labor Bureau) Tel: (072) 641-1121
- Kinki Operating Training Center Nara Operating Training Center (Yamato-Koriyama-City) (Registered with Director General of Nara Regional Labor Bureau) Tel: (074) 356-5445

Request for Periodical Self-Inspection

Self-inspection of Equipment

Laws require that users should regularly inspect equipment to operate it under good conditions at all times.

Inspections are classified into three types:

- before-work inspection
- monthly inspection
- annual inspection

The respective inspection items are specified by law. It is also required to retain the inspection record. Customers are recommended to conduct regular self-inspections as they are keys to increase the life of equipment and to use it efficiently.

Rules of Periodical Self-Inspection

The employer shall, as provided for by the Ordinance of the Ministry of Health, Labor and Welfare, conduct self-inspection periodically and keep the records of the results in respect to construction equipment such as tractor shovels and power shovels, etc., specified by Cabinet Order. (from Article 45, Industrial Safe and Health Act)

Ordinance on Industrial Safety and Hygiene

Periodical self-inspections Article 167

(1) The employer shall, as regards a vehicle type construction machine, carry out self-inspections for the following matters periodically once every period within a year. However, this shall not apply to the non-use period of a vehicle type construction machine, which is not used for a period exceeding 1 year.

(2) The employer shall, as regards a vehicle type construction machine set forth in the proviso of the proceeding paragraph, carry out self-inspection for abnormalities in each part of a construction machine before resuming the operation.

Periodical self-inspections Article 168

(1) The employer shall, as regards a vehicle type construction machine, carry out self-inspections for the following matters periodically once every period within a month. However, this shall not apply to the non-use period of a vehicle type construction machine, which is not used for a period exceeding one month:

- (i) Abnormalities in a brake, a clutch, a controlling device, and working devices.
- (ii) Damage in a wire, rope, and a chain
- (iii) Damage in a bucket, a zipper, etc.

(2) The employer shall, as regards to the vehicle type construction machine set forth in the proviso of the preceding paragraph, carry out self-inspection for the matters listed in each item of the same paragraph before resuming the operation.

Record of Periodical Self-Inspections Article 169

The employer shall, when having carried out the self-inspections set forth in the preceding two Articles, record the results and retain the records for 3 years.

Specified Self-Inspection Article 169-2

The specified self-inspection pertaining to the vehicle type construction machine shall be the self-inspection (prescribed by Article 167) and carried out by qualified personnel. The employer shall, when having carried out the specified self-inspection pertaining to a vehicle type construction machine, affix an inspection sticker stating the month and year when the said specified self-inspection was carried out at a readily visible location of the said machine.

- Caterpillar Japan has a supporting program for self-inspection as a registered inspection agency. Qualified personnel and inspection equipment are available to help customers who do not conduct internal inspections or do not have time to conduct the specified self-inspections. Please contact a Cat dealer near you for details.
- Maintenance and inspection record book for a record-saving purpose can be purchased at Caterpillar Japan.
- Penalty: Employer who fails to carry out self-inspections and to record the results will face a fine of up to five hundred thousand yen.

Checkup before Commencing the Work Article 170

The employer shall, when carrying out the work using a vehicle type construction machine, check functions of a brake and a clutch before commencing the work for the day.

Other Rules

Besides qualification for operating equipment and self inspections, the following obligations are set forth in the Industrial Safety and Health Act:

- To conduct health and safety training for new recruits and shop foremen.
- To appoint the operation leader or supervisor, and establish health and safety management system.
- To inform employees of a chain of command at the worksite, communication and signal rules, traveling route of equipment, speed limits, signs of restricted areas, etc. for securing safety in the workplace.

Industrial Safety and Health Act further also sets obligations related to mechanical structures and rental activities of equipment.

Safety comes before anything else. Please establish a workplace where no injuries occur by observing the governing laws and by referring to this manual, specifically the descriptions on safety.

Information of Japan Construction Equipment Manufacturers Association

Dear Customers

Japan Construction Equipment Manufacturers Association

Standard Certificate of Transfer

Issued by the Japan Construction Equipment Manufacturers Association

Standard Certificate of Transfer issued by the Japan Construction Equipment Manufacturers Association proves the ownership of your equipment. Please request us to issue the certificate as a proof of transfer of ownership.

Commercial transactions of construction equipment are generally made on a long-term installment plan basis with a special provision of reservation of ownership that the seller retains the ownership of the sold equipment until the buyer completely pays off the installments.

Ownership of some construction equipment can be proved with a vehicle inspection certificate, but the certificate is not issued for most of the equipment. Therefore, the buyer will need to present a third party with a proof of ownership of the sold equipment.

Japan Construction Equipment Manufacturers Association launched a system of standard certificate of transfer in 1971 to normalize trading in construction equipment and establishes a business practice relating to transfer of ownership. Customers are kindly requested to understand the intent of the system and request your seller to issue a certificate of transfer.

1. About the standard certificate of transfer

a. Japan Construction Equipment Manufacturers Association (hereinafter referred to as CEMA) sets the rules and form of standard certificate of transfer (hereinafter referred to as certificate of transfer), and members of the CEMA issue the certificate of transfer. A certificate of transfer proves the ownership of equipment.

2. Purpose of issuance

a. A certificate of transfer will be issued for clarifying the ownership of equipment and preventing misconduct such as trades of stolen equipment or fraud.

3. Issuer

a. A certificate of transfer will be issued by a distributor (Primary transferor) who sells new construction equipment and is authorized by the CEMA.

4. Eligibility

a. A certificate of transfer will be issued for the equipment, which is sold by CEMA-member distributors and defined as construction equipment by the CEMA

5. Issuance

a. A certificate of transfer will be issued and directly given to a buyer upon the buyer's request when he/she buys eligible equipment from an issuer.

b. A certificate of transfer may not be issued for the equipment, which was sold as new merchandise more than 10 years ago.

c. A certificate of transfer is not permitted to substitute a vehicle inspection certificate.

6. Prohibition of reissuance

a. Certificate of transfer should be safely stored as it will not be reissued under any circumstances.

7. In case a certificate description runs out of space

a. Discretionary page/s to the certificate will be valid with a tally seal of the issuer at the joint of two pages.

Please contact CEMA-member companies or distributors for more details of the system.

Maintenance Interval Schedule for significant parts (Japan)

Caterpillar is asking periodic maintenance to secure safety and performance. To make safety better, Caterpillar recommend periodic replacement of significant parts especially.

The parts below are easy to wearing, changing of material properties, and deterioration. Furthermore, degree of damage is hard to be measured by visual inspection.

Please contact Cat dealer to ask inspection when each interval comes.

Table 65

Significant Parts	Required Interval
Fuel system hoses	Every 2 years
Brake system hoses	Every 4 years
Brake system components	Every 2 years
Steering system hoses	Every 2 years
Work Tool (Bucket i.e.) hoses	Every 2 years

i09604089

Caterpillar Approved Work Tools

SMCS Code: 6700

Only use Cat approved work tools on this machine.

Note: Do not use a Cat work tool on a machine that is not approved by Cat.

Note: A Debris Barrier Kit is required for use in applications which create airborne debris. Consult your Cat dealer for information about this kit.

Use of the following equipment or operation in the following applications may create airborne debris:

- mulching head
- brush cutter
- hammers
- recycling of paper products certain agriculture applications
- cold planing

Note: See your Cat dealer for work tools and for work tool attachments that are approved for roading.

Note: The combination of Water Tank, Backhoe Loader, and Hydraulic Hammer exceeds the recommended load rating.

Table 66

Work Tool	226D3	232D3	239D3	249D3	236D3	242D3	257D3	259D3
General Purpose Bucket 1524 mm (60 inch)	C	C	C	C	C	C	C	C
General Purpose Bucket 1676 mm (66 inch)	C	C	C	C	C	C	C	C
General Purpose Bucket 1829 mm (72 inch)	C	C	C	C	C	C	C	C
General Purpose Bucket 1981 mm (78 inch)	C	C	C	C	C	C	C	C
General Purpose Bucket 2133 mm (84 inch)	C	C	C	C	C	C	C	C
Multipurpose Bucket 1524 mm (60 inch)	C	C	C	C	C	C	C	C
Multipurpose Bucket 1676 mm (66 inch)	C	C	C	C	C	C	C	C
Multipurpose Bucket 1829 mm (72 inch)	C	C	C	C	C	C	C	C
Multipurpose Bucket 1981 mm (78 inch)	C	C	C	C	C	C	C	C
Multipurpose Bucket 2133 mm (84 inch)	C	C	C	C	C	C	C	C
Low Profile Bucket 1372 mm (54 inch)	C	C	C	C	C	C	C	C
Low Profile Bucket 1524 mm (60 inch)	C	C	C	C	C	C	C	C
Low Profile Bucket 1676 mm (66 inch)	C	C	C	C	C	C	C	C
Low Profile Bucket 1829 mm (72 inch)	C	C	C	C	C	C	C	C
Low Profile Bucket 1981 mm (78 inch)	C	C	C	C	C	C	C	C
Light Material Bucket 1829 mm (72 inch)	C	C	C	C	C	C	C	C
Light Material Bucket 1981 mm (78 inch)	C	C	C	C	C	C	C	C
Light Material Bucket 2134 mm (84 inch)	C	C	C	C	C	C	C	C
Light Material Bucket 2438 mm (96 inch)	C	C	C	C	C	C	C	C
Utility Bucket 1524 mm (60 inch)	C	C	C	C	C	C	C	C

(continued)

(Table 66, contd)

Work Tool	226D3	232D3	239D3	249D3	236D3	242D3	257D3	259D3
Utility Bucket 1676 mm (66 inch)	C	C	C	C	C	C	C	C
Utility Bucket 1829 mm (72 inch)	C	C	C	C	C	C	C	C
Mixing Bucket MB200	C	C	C	C	C	C	C	C
Mixing Bucket MB250						C^	C	C
Stump Bucket	C	C	C	C	C	C	C	C
A14B/A23 Auger	C	C	C	C	C	C	C	C
A19B/A41 Auger	C	C	C	C	C	C	C	C
A26B/A68 Auger	C	C	C	C	C	C	C	C
BH27 Backhoe	CV	CV	CV	CV	CV	CV	CV	CV
BH30 Backhoe	CV	CV	CV	CV	CV	CV	CV	CV
BH30 Backhoe								
BH130 Backhoe	CV	CV	CV	CV	CV	CV	CV	CV
BH150 Backhoe	CV	CV	CV	CV	CV	CV	CV	CV
BH160 Backhoe								
Angle Blade 1829 mm (72 inch)	C	C	C	C	C	C	C	C
Angle Blade 2134 mm (84 inch)	C	C	C	C	C	C	C	C
Dozer Blade 2007 mm (79 inch)	C	C	C	C	C	C	C	C
Dozer Blade 2337 mm (92 inch)	C	C	C	C	C	C	C	C
BA18 Angle Broom	C	C	C	C	C	C	C	C
BU115 Utility Broom	C	C	C	C*	C	C	C	C
BU118 Utility Broom			C*	C*	C*	C*	C*	C*
BP15B Pickup Broom	C	C	C	C*	C	C	C	C
BP18B Pickup Broom			C		C*	C*	C*	C*
BA118C Angle Broom	C	C	C	C	C	C	C	C
BP115C Pickup Broom	C*	C*	C	C	C*	C	C	C
BP118C Pickup Broom			C*	C*	C*	C	C	C
PC104 Cold Planer	C	C	C	C	C	C	C	C
PC104B Cold Planer	C	C	C	C	C	C	C	C
PC105 Cold Planer	C	C	C	C	C	C	C	C
PC203 Cold Planer	C	C	C	C	C	C	C	C
PC204 Cold Planer	C	C	C	C	C	C	C	C
PC205 Cold Planer	C	C	C	C	C	C	C	C

(continued)

(Table 66, contd)

Work Tool	226D3	232D3	239D3	249D3	236D3	242D3	257D3	259D3
PC206 Cold Planer	C	C	C	C	C	C	C	C
PC205B Cold Planer	C	C	C	C	C	C	C	C
PC305 Cold Planer	C	C	C	C	C	C	C	C
PC306 Cold Planer	C	C	C	C	C	C	C	C
PC306B Cold Planer	C	C	C	C	C	C	C	C
Carriage and Fork Tines	C	C	C	C	C	C	C	C
Utility Fork 1676 mm (66 inch)	C	C	C	C	C	C	C	C
Utility Fork 1829 mm (72 inch)	C	C	C	C	C	C	C	C
Industrial Grapple Bucket 1524 mm (60 inch)	C	C	C	C	C	C	C	C
Industrial Grapple Bucket 1676 mm (66 inch)	C	C	C	C	C	C	C	C
Industrial Grapple Bucket 1829 mm (72 inch)	C	C	C	C	C	C	C	C
Industrial Grapple Bucket 1981 mm (78 inch)	C	C	C	C	C	C	C	C
Industrial Grapple Fork 1676 mm (66 inch)	C	C	C	C	C	C	C	C
Industrial Grapple Fork 1829 mm (72 inch)	C	C	C	C	C	C	C	C
Industrial Grapple Rake 1829 mm (72 inch)	C	C	C	C	C	C	C	C
Industrial Grapple Rake 2134 mm (84 inch)	C	C	C	C	C	C	C	C
Utility Grapple Bucket 1676 mm (66 inch)	C	C	C	C	C	C	C	C
Utility Grapple Bucket 1829 mm (72 inch)	C	C	C	C	C	C	C	C
Utility Grapple Fork 1676 mm (66 inch)	C	C	C	C	C	C	C	C
Utility Grapple Fork 1829 mm (72 inch)	C	C	C	C	C	C	C	C
Material Handling Arm	C	C	C	C	C	C	C	C
SR117 Snowblower	CV	CV	CV	CV				
SR118 Snowblower					CV	CV	CV	CV
SR121 Snowblower					CV	CV	CV	CV
SR318 Snowblower	CV	CV	CV	CV	CV	CV	CV	CV
SR321 Snowblower	CV	CV	CV	CV	CV	CV	CV	CV
Sectional Snow Push 2440 mm (8 ft)	C	C	C	C	C	C	C	C

(continued)

(Table 66, contd)

Work Tool	226D3	232D3	239D3	249D3	236D3	242D3	257D3	259D3
Sectional Snow Push 3050 mm (10 ft)			C	C	C	C	C	C
Sectional Snow Push 3660 mm (12 ft)								
Sectional Snow Push 4270 mm (15 ft)								
LR15B/LR116 Landscape Rake	C*	C*	C*	C*	C*	C*	C*	C*
LR18B/LR119 Landscape Rake			C*	C*			C*	C*
PR172/PR118 Power Rake	C	C	C	C	C	C	C	C
PR184/PR121 Power Rake	C	C	C	C	C	C	C	C
PR190/PR123 Power Rake	C	C	C	C	C	C	C	C
LT13B /LT114 Landscape Tiller	C	C	C	C	C	C	C	C
LT18B/LT118 Landscape Tiller				C			C	C
SG16B/SG16 Stump Grinder	C	C	C	C	C	C	C	C
SG18B/SG36 Stump Grinder	C	C	C	C	C	C	C	C
T6B/T109 Trencher	C	C	C	C	C	C	C	C
T9B/T112 Trencher	C	C	C	C	C	C	C	C
T15B/T315 Trencher	C	C	C	C	C	C	C	C
CV16B/CV117 Vibratory Compactor	C*	C	C*	C*	C	C	C*	C*
CV18B/CV119 Vibratory Compactor					C			
SW45 Wheel Saw 3 inch			CV	CV			CV	CV
SW45 Wheel Saw 6 inch			CV	CV			CV	CV
SW45 Wheel Saw 8 inch			CV	CV			CV	CV
SW60 Wheel Saw 6 inch								
SW60 Wheel Saw 8 inch								
SW80 Wheel Saw								
SW345B Wheel Saw 3 inch			CV	CV			CV	CV
SW345B Wheel Saw 5 inch			CV	CV			CV	CV
SW360B Wheel Saw 3 inch								
SW360B Wheel Saw 4 inch								
SW360B Wheel Saw 5 inch								

(continued)

(Table 66, contd)

Work Tool	226D3	232D3	239D3	249D3	236D3	242D3	257D3	259D3
SW360B Wheel Saw 6 inch								
SW360B Wheel Saw 8 inch								
SW460B Wheel Saw 3 inch								
SW460B Wheel Saw 6 inch								
SW460B Wheel Saw 8 inch								
SW380B Wheel Saw								
SW480B Wheel Saw								
SW345 Wheel Saw 3 inch			C^V	C^V			C^V	C^V
SW345 Wheel Saw 5 inch			C^V	C^V			C*V	C*V
SW360 Wheel Saw 3 inch								
SW360 Wheel Saw 4 inch								
SW360 Wheel Saw 5 inch								
SW360 Wheel Saw 6 inch								
SW360 Wheel Saw 8 inch								
SW460 Wheel Saw 3 inch								
SW460 Wheel Saw 6 inch								
SW460 Wheel Saw 8 inch								
SW380 Wheel Saw								
SW480 Wheel Saw								
B4/B4s Hammer	CD	CD	CD	CD	CD	CD	CD	CD
H55Es Hammer	CD	CD	CD	CD	CD	CD	CD	CD
B6/B6s Hammer	CD	CD	CD	CD	CD	CD	CD	CD
H65Es Hammer	CD	CD	CD	CD	CD	CD	CD	CD
BR160/BR115 Brush Cutter	C	C	C	C				
BR166/BR117 Brush Cutter					C	C	C	C
BR172/BR118/BR120 Brush Cutter					C	C	C	C
BR272/BR218 Brush Cutter	C	C	C	C				
BR318 Brush Cutter	C	C	C	C	C	C	C	C
BR378/BR320 Brush Cutter								
BRX118							C^	C^
BRX318							C^	C^
BRX418								

(continued)

(Table 66, contd)

Work Tool	226D3	232D3	239D3	249D3	236D3	242D3	257D3	259D3
S305 Shear			CD	CD	CD	CD	CD	CD
S308 Shear			CD	CD	CD	CD	CD	CD
HM112C/HM112 Mulcher	C	C	C	C				
HM115C/HM115 Mulcher					C	C	C	C
HM215C/HM215 Mulcher	C	C	C	C	C	C	C	C
HM315C/HM316 Mulcher								
HM415C/HM416 Mulcher								
HM418C/HM418 Mulcher								
HM312 Mulcher								
HM315 Mulcher								
HM315B Mulcher								
HM415B Mulcher								
Single Bale Spear 39"	C	C	C	C	C	C	C	C
Double Bale Spear 39"	C	C	C	C	C	C	C	C
Single Bale Spear 49"	C	C	C	C	C	C	C	C
Double Bale Spear 49"	C	C	C	C	C	C	C	C
Bale Grapple	C	C	C	C	C	C	C	C
84" Material Handling Bucket	C	C	C	C	C	C	C	C
96" Material Handling Bucket	C	C	C	C	C	C	C	C
102" Material Handling Bucket	C	C	C	C	C	C	C	C
8' Snow Pusher	C	C	C	C	C	C	C	C
10' Snow Pusher	C	C	C	C	C	C	C	C
12' Snow Pusher	C	C	C	C	C	C	C	C
8' Snow Pusher (Rubber Edge)	C	C	C	C	C	C	C	C
10' Snow Pusher (Rubber Edge)	C	C	C	C	C	C	C	C
12' Snow Pusher (Rubber Edge)	C	C	C	C	C	C	C	C
6' Snow Blade	C	C	C	C	C	C	C	C
7' Snow Blade	C	C	C	C	C	C	C	C
8' Snow Blade	C	C	C	C	C	C	C	C
9' Snow Blade	C	C	C	C	C	C	C	C
10' Snow Blade	C	C	C	C	C	C	C	C
DFS118 Silage Defacer	C	C	C	C	C	C	C	C

(continued)

(Table 66, contd)

Work Tool	226D3	232D3	239D3	249D3	236D3	242D3	257D3	259D3
DFS121 Silage Defacer	C	C	C	C	C	C	C	C
DFS124 Silage Defacer	C	C	C	C	C	C	C	C
BB121 Box Blade	C	C	C	C	C	C	C	C
BB124 Box Blade	C	C	C	C	C	C	C	C
Snow Multi V Plow 1524 mm (60.0 inch)	C	C	C	C	C	C	C	C
Snow Multi V Plow 2133 mm (84.0 inch)	C	C	C	C	C	C	C	C
Snow Wing Plow 2450 mm (96.0 inch)	C	C	C	C	C	C	C	C
Snow Wing Plow 2750 mm (108.0 inch)	C	C	C	C	C	C	C	C
Skeleton Bucket 1956 mm (77.0 inch)	C	C	C	C	C	C	C	C
Skeleton Bucket 2133 mm (84.0 inch)	C	C	C	C	C	C	C	C
Skeleton Bucket 2336 mm (92.0 inch)	C	C	C	C	C	C	C	C
Industrial Bucket 1727 mm (68.0 inch)	C	C	C	C	C	C	C	C
Industrial Bucket 1880 mm (74.0 inch)	C	C	C	C	C	C	C	C
Industrial Bucket 2032 mm (80.0 inch)	C	C	C	C	C	C	C	C
Industrial Bucket 2184 mm (86.0 inch)	C	C	C	C	C	C	C	C
Industrial Bucket 2337 mm (92.0 inch)	C	C	C	C	C	C	C	C
Heavy-Duty Carriage	C	C	C	C	C	C	C	C
Heavy-Duty Tines 1219 mm (48.0 inch)	C	C	C	C	C	C	C	C
Heavy-Duty Tines 1524 mm (60.0 inch)	C	C	C	C	C	C	C	C
Nursery Forks	C	C	C	C	C	C	C	C

Table 67

Work Tool	246D3	262D3	272D3	272D3 XE	279D3	289D3	299D3	299D3 XE
General Purpose Bucket 1524 mm (60 inch)	C	C	C	C	C	C	C	C
General Purpose Bucket 1676 mm (66 inch)	C	C	C	C	C	C	C	C

(continued)

(Table 67, contd)

Work Tool	246D3	262D3	272D3	272D3 XE	279D3	289D3	299D3	299D3 XE
General Purpose Bucket 1829 mm (72 inch)	C	C	C	C	C	C	C	C
General Purpose Bucket 1981 mm (78 inch)	C	C	C	C	C	C	C	C
General Purpose Bucket 2133 mm (84 inch)	C	C	C	C	C	C	C	C
Multipurpose Bucket 1524 mm (60 inch)	C	C	C	C	C	C	C	C
Multipurpose Bucket 1676 mm (66 inch)	C	C	C	C	C	C	C	C
Multipurpose Bucket 1829 mm (72 inch)	C	C	C	C	C	C	C	C
Multipurpose Bucket 1981 mm (78 inch)	C	C	C	C	C	C	C	C
Multipurpose Bucket 2133 mm (84 inch)	C	C	C	C	C	C	C	C
Low Profile Bucket 1372 mm (54 inch)	C	C	C	C	C	C	C	C
Low Profile Bucket 1524 mm (60 inch)	C	C	C	C	C	C	C	C
Low Profile Bucket 1676 mm (66 inch)	C	C	C	C	C	C	C	C
Low Profile Bucket 1829 mm (72 inch)	C	C	C	C	C	C	C	C
Low Profile Bucket 1981 mm (78 inch)	C	C	C	C	C	C	C	C
Light Material Bucket 1829 mm (72 inch)	C	C	C	C	C	C	C	C
Light Material Bucket 1981 mm (78 inch)	C	C	C	C	C	C	C	C
Light Material Bucket 2134 mm (84 inch)	C	C	C	C	C	C	C	C
Light Material Bucket 2438 mm (96 inch)	C	C	C	C	C	C	C	C
Utility Bucket 1524 mm (60 inch)	C	C	C	C	C	C	C	C
Utility Bucket 1676 mm (66 inch)	C	C	C	C	C	C	C	C
Utility Bucket 1829 mm (72 inch)	C	C	C	C	C	C	C	C
Mixing Bucket MB200	C	C	C	C	C	C	C	C
Mixing Bucket MB250	C	C	C	C	C	C	C	C
Stump Bucket	C	C	C	C	C	C	C	C

(continued)

(Table 67, contd)

Work Tool	246D3	262D3	272D3	272D3 XE	279D3	289D3	299D3	299D3 XE
A14B/A23 Auger	C	C	C	C	C	C	C	C
A19B/A41 Auger	C	C	C	C	C	C	C	C
A26B/A68 Auger	C	C	C	C	C	C	C	C
BH27 Backhoe								
BH30 Backhoe								
BH30 Backhoe	CV	CV	CV	CV	CV	CV	CV	CV
BH130 Backhoe	CV	CV	CV	CV	CV	CV	CV	CV
BH150 Backhoe	CV	CV	CV	CV	CV	CV	CV	CV
BH160 Backhoe	CV	CV	CV	CV	CV	CV	CV	CRV
Angle Blade 1829 mm (72 inch)	C	C	C	C	C	C	C	C
Angle Blade 2134 mm (84 inch)	C	C	C	C	C	C	C	C
Dozer Blade 2007 mm (79 inch)	C	C	C	C	C	C	C	C
Dozer Blade 2337 mm (92 inch)	C	C	C	C	C	C	C	C
BA18 Angle Broom	C	C	C	C	C	C	C	C
BU115 Utility Broom	C	C	C	C	C	C	C	C
BU118 Utility Broom	C	C	C	C	C	C	C	C
BP15B Pickup Broom	C	C	C	C	C	C	C	C
BP18B Pickup Broom	C	C	C	C	C	C	C	C
BA118C Angle Broom	C	C	C	C	C	C	C	C
BP115C Pickup Broom	C	C	C	C	C	C	C	C
BP118C Pickup Broom	C	C	C	C	C	C	C	C
PC104 Cold Planer	C	C	C	C	C	C	C	C
PC104B Cold Planer	C	C	C	C	C	C	C	C
PC105 Cold Planer	C	C	C	C	C	C	C	C
PC203 Cold Planer	C	C	C	C	C	C	C	C
PC204 Cold Planer	C	C	C	C	C	C	C	C
PC205 Cold Planer	C	C	C	C	C	C	C	C
PC206 Cold Planer	C	C	C	C	C	C	C	C
PC210 Cold Planer	C	C	C	C	C	C	C	C
PC205B Cold Planer	C	C	C	C	C	C	C	C
PC305 Cold Planer	C	C	C	C	C	C	C	C
PC306 Cold Planer	C	C	C	C	C	C	C	C
PC306 Cold Planer w/ Water Tank	C*	C	C	C	C	C	C	C

(continued)

(Table 67, contd)

Work Tool	246D3	262D3	272D3	272D3 XE	279D3	289D3	299D3	299D3 XE
PC306B Cold Planer	C	C	C	C	C	C	C	C
PC306 XD Cold Planer			C*	C*	C	C	C	CR
PC306B XD Cold Planer			C*	C*	C	C	C	CR
PC310 Cold Planer	C*	C	C	C	C	C	C	C
PC310B Cold Planer	C*	C	C	C	C	C	C	C
PC310 XD Cold Planer						C*R	C*R	C*R
PC310B XD Cold Planer						C*R	C*R	C*R
PC406 Cold Planer				C				C
PC406 Cold Planer w/ Water Tank				C				C
PC408 Cold Planer				C				C
PC408B Cold Planer				C				C
PC412 Cold Planer				C				C
PC412B Cold Planer				C				C
Carriage and Fork Tines	C	C	C	C	C	C	C	C
Utility Fork 1676 mm (66 inch)	C	C	C	C	C	C	C	C
Utility Fork 1829 mm (72 inch)	C	C	C	C	C	C	C	C
Industrial Grapple Bucket 1524 mm (60 inch)	C	C	C	C	C	C	C	C
Industrial Grapple Bucket 1676 mm (66 inch)	C	C	C	C	C	C	C	C
Industrial Grapple Bucket 1829 mm (72 inch)	C	C	C	C	C	C	C	C
Industrial Grapple Bucket 1981 mm (78 inch)	C	C	C	C	C	C	C	C
Industrial Grapple Fork 1676 mm (66 inch)	C	C	C	C	C	C	C	C
Industrial Grapple Fork 1829 mm (72 inch)	C	C	C	C	C	C	C	C
Industrial Grapple Rake 1829 mm (72 inch)	C	C	C	C	C	C	C	C
Industrial Grapple Rake 2134 mm (84 inch)	C	C	C	C	C	C	C	C
Utility Grapple Bucket 1676 mm (66 inch)	C	C	C	C	C	C	C	C
Utility Grapple Bucket 1829 mm (72 inch)	C	C	C	C	C	C	C	C
Utility Grapple Fork 1676 mm (66 inch)	C	C	C	C	C	C	C	C

(continued)

(Table 67, contd)

Work Tool	246D3	262D3	272D3	272D3 XE	279D3	289D3	299D3	299D3 XE
Utility Grapple Fork 1829 mm (72 inch)	C	C	C	C	C	C	C	C
Material Handling Arm	C	C	C	C	C	C	C	C
SR117 Snowblower								
SR118 Snowblower	CV	CV	CV	CV	CV	CV	CV	CV
SR121 Snowblower	CV	CV	CV	CV	CV	CV	CV	CV
SR318 Snowblower	CV	CV	CV	CV	CV	CV	CV	CV
SR321 Snowblower	CV	CV	CV	CV	CV	CV	CV	CV
SR418 Snowblower				CV				CV
SR421 Snowblower				CV				CV
Sectional Snow Push 2440 mm (8 ft)	C	C	C	C	C	C	C	C
Sectional Snow Push 3050 mm (10 ft)	C	C	C	C	C	C	C	C
Sectional Snow Push 3660 mm (12 ft)		C	C	C	C	C	C	C
Sectional Snow Push 4270 mm (15 ft)			C	C			C	C
LR15B/LR116 Landscape Rake	C	C	C	C	C	C	C	C
LR18B/LR119 Landscape Rake	C	C	C	C	C	C	C	C
PR172/PR118 Power Rake	C	C	C	C	C	C	C	C
PR184/PR121 Power Rake	C	C	C	C	C	C	C	C
PR190/PR123 Power Rake	C	C	C	C	C	C	C	C
LT13B/LT114 Landscape Tiller	C	C	C	C	C	C	C	C
LT18B/LT118 Landscape Tiller	C	C	C	C	C	C	C	C
SG16B/SG16 Stump Grinder	C	C	C	C	C	C	C	C
SG18B/SG36 Stump Grinder	C	C	C	C	C	C	C	C
T6B/T109 Trencher	C	C	C	C	C	C	C	C
T9B/T112 Trencher	C	C	C	C	C	C	C	C
T15B/T315 Trencher	C	C	C	C	C	C	C	C
CV16B/CV117 Vibratory Compactor	C	C	C	C	C	C	C	C
CV18B/CV119 Vibratory Compactor	C	C	C	C	C	C	C	C
SW45 Wheel Saw 3 inch	C^V	C^V	CV	CV	CV	CV	CV	CV
SW45 Wheel Saw 6 inch	C^V	C^V	CV	CV	CV	CV	CV	CV

(continued)

(Table 67, contd)

Work Tool	246D3	262D3	272D3	272D3 XE	279D3	289D3	299D3	299D3 XE
SW45 Wheel Saw 8 inch	C^V	C^V	CV	CV	CV	CV	CV	CV
SW60 Wheel Saw 6 inch		C^V	C^V	C^V	C^V	CV	CV	CV
SW60 Wheel Saw 8 inch		C^V	C^V	C^V	C^V	CV	CV	CV
SW80 Wheel Saw			C*V	C*V	C*V	CV	CV	CV
SW345B Wheel Saw 3 inch	C^V	C^V	CV	CV	CV	CV	CV	CV
SW345B Wheel Saw 5 inch	C^V	C^V	CV	CV	CV	CV	CV	CV
SW360B Wheel Saw 3 inch			C^V	C^V	C^V	C^V	CV	CRV
SW360B Wheel Saw 4 inch		C^V	C^V	C^V	C^V	C^V	CV	CRV
SW360B Wheel Saw 5 inch		C^V	C^V	C^V	C^V	C^V	CV	CRV
SW360B Wheel Saw 6 inch		C^V	C^V	C^V	C^V	C^V	CV	CRV
SW360B Wheel Saw 8 inch		C^V	C^V	C^V	C^V	C^V	CV	CRV
SW460B Wheel Saw 3 inch				C^V				CRV
SW460B Wheel Saw 6 inch				C^V				CRV
SW460B Wheel Saw 8 inch				C^V				CRV
SW380B Wheel Saw			C^V	C^V	C^V	C^V	CV	CRV
SW480B Wheel Saw				C^V				CRV
SW345 Wheel Saw 3 inch	C^V	C^V	CV	CV	CV	CV	CV	CV
SW345 Wheel Saw 5 inch	C^V	C^V	CV	CV	CV	CV	CV	CV
SW360 Wheel Saw 3 inch			C^V	C^V	C^V	C^V	CV	CRV
SW360 Wheel Saw 4 inch		C^V	C^V	C^V	C^V	C^V	CV	CRV
SW360 Wheel Saw 5 inch		C^V	C^V	C^V	C^V	C^V	CV	CRV
SW360 Wheel Saw 6 inch		C^V	C^V	C^V	C^V	C^V	CV	CRV
SW360 Wheel Saw 8 inch		C^V	C^V	C^V	C^V	C^V	CV	CRV
SW460 Wheel Saw 3 inch				C^V				CRV
SW460 Wheel Saw 6 inch				C^V				CRV
SW460 Wheel Saw 8 inch				C^V				CRV
SW380 Wheel Saw			C^V	C^V	C^V	C^V	CV	CRV
SW480 Wheel Saw				C^V				CRV
B4/B4s Hammer	CD	CD	CD	CD	CD	CD	CD	CD
H55Es Hammer	CD	CD	CD	CD	CD	CD	CD	CD
B6/B6s Hammer	CD	CD	CD	CD	CD	CD	CD	CD
H65Es Hammer	CD	CD	CD	CD	CD	CD	CD	CD
BR160/BR115 Brush Cutter								
BR166/BR117 Brush Cutter	C	C	C	C	C	C	C	C
BR172/BR118/BR120 Brush Cutter	C	C	C	C	C	C	C	C

(continued)

(Table 67, contd)

Work Tool	246D3	262D3	272D3	272D3 XE	279D3	289D3	299D3	299D3 XE
BR272/BR218 Brush Cutter								
BR318 Brush Cutter	C	C	C	C	C	C	C	C
BR378/BR320 Brush Cutter	C	C	C	C	C	C	C	C
BRX118		C^	C	C	C	C	C	C
BRX318		C^	C	C	C	C	C	C
BRX418				C				C
S305 Shear	CD	CD	CD	CD	CD	CD	CD	CD
S308 Shear	CD	CD	CD	CD	CD	CD	CD	CD
HM112C/HM112 Mulcher								
HM115C/HM115 Mulcher	C	C	C	C	C	C	C	C
HM215C/HM215 Mulcher								
HM315C/HM316 Mulcher	C	C	C	C	C	C	C	C
HM415C/HM416 Mulcher				C				C
HM418C/HM418 Mulcher				C				C
HM312 Mulcher	C	C	C	C	C	C	C	C
HM315 Mulcher	C	C	C	C	C	C	C	C
HM315B Mulcher	C	C	C	C	C	C	C	C
HM415B Mulcher				C				C
Single Bale Spear 39"	C	C	C	C	C	C	C	C
Double Bale Spear 39"	C	C	C	C	C	C	C	C
Single Bale Spear 49"	C	C	C	C	C	C	C	C
Double Bale Spear 49"	C	C	C	C	C	C	C	C
Bale Grapple	C	C	C	C	C	C	C	C
84" Material Handling Bucket	C	C	C	C	C	C	C	C
96" Material Handling Bucket	C	C	C	C	C	C	C	C
102" Material Handling Bucket	C	C	C	C	C	C	C	C
8' Snow Pusher	C	C	C	C	C	C	C	C
10' Snow Pusher	C	C	C	C	C	C	C	C
12' Snow Pusher	C	C	C	C	C	C	C	C
8' Snow Pusher (Rubber Edge)	C	C	C	C	C	C	C	C
10' Snow Pusher (Rubber Edge)	C	C	C	C	C	C	C	C
12' Snow Pusher (Rubber Edge)	C	C	C	C	C	C	C	C

(continued)

(Table 67, contd)

Work Tool	246D3	262D3	272D3	272D3 XE	279D3	289D3	299D3	299D3 XE
6' Snow Blade	C	C	C	C	C	C	C	C
7' Snow Blade	C	C	C	C	C	C	C	C
8' Snow Blade	C	C	C	C	C	C	C	C
9' Snow Blade	C	C	C	C	C	C	C	C
10' Snow Blade	C	C	C	C	C	C	C	C
DFS118 Silage Defacer	C	C	C	C	C	C	C	C
DFS121 Silage Defacer	C	C	C	C	C	C	C	C
DFS124 Silage Defacer	C	C	C	C	C	C	C	C
BB121 Box Blade	C	C	C	C	C	C	C	C
BB125 Box Blade	C	C	C	C	C	C	C	C
Snow Multi V Plow 1524 mm (60.0 inch)	C	C	C	C	C	C	C	C
Snow Multi V Plow 2133 mm (84.0 inch)	C	C	C	C	C	C	C	C
Snow Wing Plow 2450 mm (96.0 inch)	C	C	C	C	C	C	C	C
Snow Wing Plow 2750 mm (108.0 inch)	C	C	C	C	C	C	C	C
Snow Wing Plow 2450 mm (96.0 inch)	C	C	C	C	C	C	C	C
Snow Wing Plow 2750 mm (108.0 inch)	C	C	C	C	C	C	C	C
Snow Wing Plow 2450 mm (96.0 inch)	C	C	C	C	C	C	C	C
Snow Wing Plow 2750 mm (108.0 inch)	C	C	C	C	C	C	C	C
Skeleton Bucket 1956 mm (77.0 inch)	C	C	C	C	C	C	C	C
Skeleton Bucket 2133 mm (84.0 inch)	C	C	C	C	C	C	C	C
Skeleton Bucket 2336 mm (92.0 inch)	C	C	C	C	C	C	C	C
Industrial Bucket 1727 mm (68.0 inch)	C	C	C	C	C	C	C	C
Industrial Bucket 1880 mm (74.0 inch)	C	C	C	C	C	C	C	C
Industrial Bucket 2032 mm (80.0 inch)	C	C	C	C	C	C	C	C
Industrial Bucket 2184 mm (86.0 inch)	C	C	C	C	C	C	C	C

(continued)

(Table 67, contd)

Work Tool	246D3	262D3	272D3	272D3 XE	279D3	289D3	299D3	299D3 XE
Industrial Bucket 2337 mm (92.0 inch)	C	C	C	C	C	C	C	C
Heavy-Duty Carriage	C	C	C	C	C	C	C	C
Heavy-Duty Tines 1219 mm (48.0 inch)	C	C	C	C	C	C	C	C
Heavy-Duty Tines 1524 mm (60.0 inch)	C	C	C	C	C	C	C	C
Nursery Forks	C	C	C	C	C	C	C	C

Legend

C - Compatible

C* - Compatible But Lift Restriction Apply

C^ - Compatible But Lift Restrictions Apply and Max Machine Counterweights Required

D - European Union Restrictions Apply; Refer to Operation Maintenance Manual, “Safety Section: Worktools: Demolition”

R - Machine must have limited options installed to avoid exceeding the maximum total machine rated capacity. Refer to the Operation and Maintenance Manual for the specific Work Tool for details.

V - Requires use of forward-facing camera kit to comply with local EU requirements. Consult CAT dealer for additional information.

Many of the work tools in the table have an Operation and Maintenance Manual. Refer to the Operation and Maintenance Manual that is provided with the work tool for the proper use of the work tool.

Consult your Cat dealer concerning specific work tools that are approved by Cat for this machine. This list was complete at the time of publication. There may be more work tools that have been approved since that time. Consult your Cat dealer for an updated list of approved work tools.

INTENDED USE STATEMENT for the Material Handling Arm

This Work Tool has the intended functions of lifting and transporting suspended loads. Always select sufficiently sized lifting accessories. Always inspect the lifting accessories before use.

Do not use the work tool improperly.

Remove the work tool from the machine before you lift the host machine. Refer to Operation and Maintenance Manual, “Lifting and Tying Down the Machine” for details.

INTENDED USE STATEMENT for the Multipurpose Bucket

This Work Tool has the intended functions of dozing, digging, loading, lifting, carrying, and moving material such as earth, crushed rock, or gravel.

Do not use the work tool improperly.

Remove the work tool from the machine before you lift the host machine. Refer to Operation and Maintenance Manual, “Lifting and Tying Down the Machine” for details.

INTENDED USE STATEMENT for the Grapple Bucket

This Work Tool has the intended functions of digging, loading, lifting, carrying, and moving material such as earth, crushed rock, gravel, or debris.

Do not use the work tool improperly.

Remove the work tool from the machine before you lift the host machine. Refer to Operation and Maintenance Manual, “Lifting and Tying Down the Machine” for details.

INTENDED USE STATEMENT for the Grapple Rake

This Work Tool has the intended functions of raking, loading, carrying, and moving bulky material. The material may be encountered in the following applications:

- Landscape cleanup
- Storm debris cleanup
- Demolition

- Industrial
- Construction

Do not use the work tool improperly.

- Do not pry with one rake tine. Use multiple rake tines to loosen material.
- Remove the work tool from the machine before you lift the host machine. Refer to Operation and Maintenance Manual, “Lifting and Tying Down the Machine” for details.
- Do not place the weight of the host machine on the grapples in the open position.

INTENDED USE STATEMENT for the Grapple Forks

This Work Tool has the intended functions of loading, carrying, and moving bulky materials.

Do not use the work tool improperly.

Remove the work tool from the machine before you lift the host machine. Refer to Operation and Maintenance Manual, “Lifting and Tying Down the Machine” for details.

INTENDED USE STATEMENT for the Nursery Forks

Caterpillar Nursery Forks are designed for moving ball and burlap trees and potted plants used in plant nurseries and landscaping applications. The operator can pivot one fork out to allow gained maneuverability and handling capabilities in nurseries and in landscaping applications. Fork tines can be configured with manually adjusted forks or hydraulically side shifting forks to give you greater flexibility when handling multiple root balls or different-sized root balls.

i08292382

Decommissioning and Disposal

SMCS Code: 1000; 7000

When the product is removed from service, local regulations for the product decommissioning will vary. Disposal of the product will vary with local regulations.

Improperly disposing of waste can threaten the environment. Obey all local regulations for the decommissioning and disposal of materials.

Utilize appropriate personal protective equipment when decommissioning and disposing product.

Consult the nearest Cat dealer for additional information. Including information for component remanufacturing and recycling options.

Index

D

E

F

G

H

I

L

M

O

P

Q

R

S

T

V

W

Product and Dealer Information

Note: For product identification plate locations, see the section “Product Identification Information” in the Operation and Maintenance Manual.

Delivery Date: _____

Product Information

Model: _____

Product Identification Number: _____

Engine Serial Number: _____

Transmission Serial Number: _____

Generator Serial Number: _____

Attachment Serial Numbers: _____

Attachment Information: _____

Customer Equipment Number: _____

Dealer Equipment Number: _____

Dealer Information

Name: _____ Branch: _____

Address: _____

_____

_____

	Dealer Contact	Phone Number	Hours
Sales:			
Parts:			
Service:			